DONGHUA

CONNECTING A WORLD IN MOTION



PRODUCT CATALOGUE EUROPE
PRODUKTKATALOG EUROPA
2009/2010


DONGHUA
DONGHUA

A DRIVING CHAINS *ANTRIEBSKETTEN* 1–42

Short pitch precision roller chains (A series) ..... 3 – 6
Hochleistungsrollenketten (A Serie)
Short pitch precision roller chains (B series) ..... 7 – 9
Hochleistungsrollenketten (B Serie)
Heavy duty series roller chains ..... 10 – 11
Hochleistungsrollenketten, schwere Ausführung
Cottered type short pitch precision roller chains (A series) 12
Hochleistungsrollenketten mit Splinten (A Serie)
Heavy duty series cottered type roller chains 13
Rollenketten mit Splinten, schwere Ausführung
Other roller chains 14
Andere Rollenketten
Corrosion resistant / Zinc-plated chains 15
Korrosionsbeständige Ketten, verzinkt
Corrosion resistant / Nickel-plated chains 16
Korrosionsbeständige Ketten, vernickelt
Corrosion resistant / Dacromet-plated chains ..... 17 – 18
Korrosionsgeschützte Hochleistungsrollenketten, Dacromet beschichtet
Oil field chains ..... 19 – 21
Ölfeldketten
Anti-sidebow chains for pushing window ..... 22 – 23
Rückensteife Ketten für Fensteröffner
Side bow chains 24
Seitenbogenketten
Side bow chain with attachments 25
Anbauteile für Seitenbogenketten
Heavy duty cranked-link transmission chains ..... 26 – 27
Rotaryketten
Hy-Vo Silent chains 28
Hy-Vo Zahnketten
Silent chains ..... 29 – 30
Zahnketten
Self-tooth-forming chains (P.I.V. chains) 30
P.I.V. Ketten
Motorcycle chains ..... 31 – 32
Motorradketten

O-Ring motorcycle chains 33
Motorradketten mit O-Ring
O-Ring chains ..... 33 – 34
Ketten mit O-Ring
Engine mechanism chains (Timing chains) ..... 34 – 35
Steuerketten
Self-lubrication roller chains 36
Selbstschmierungsrollenketten
Chain couplings ..... 37 – 38
Kettenkupplungen
Coupling chains ..... 39 – 40
Kupplungsketten
Bushing chains 40
Buchsenketten
Double pitch transmission chains 41
Langgliedrige Rollenketten
Double pitch transmission chain with attachments 42
Anbauteile für langgliedrige Rollenketten

B CONVEYOR CHAINS *FÖRDERKETTEN* **43–232**

Roller chains with straight side plates (A series) 45
Rollenketten mit geraden Laschen (A Serie)
Roller chains with straight side plates (B series) 46
Rollenketten mit geraden Laschen (B Serie)
Short pitch conveyor chain with attachments ..... 47 – 58
Anbauteile für Förderketten
Conveyor chain with special attachments (A series) ..... 59 – 66
Sonder-Anbauteile für Förderketten (A Serie)
Conveyor chain with special attachments (B series) ..... 67 – 70
Sonder-Anbauteile für Förderketten (B Serie)
Conveyor chain with special attachments 71
Förderketten mit Sonder-Anbauteilen
Short pitch conveyor chain with extended pins 72
Förderketten mit Mitnehmerbolzen
Conveyor chain with special extended pins ..... 73 – 74
Förderketten mit Sonder-Mitnehmerbolzen

Double pitch conveyor chains 75
Langgliedrige Förderketten
Double pitch conveyor chain with attachments ..... 76 – 81
Sonder-Anbauteile für langgliedrige Förderketten
Double pitch conveyor chain with special attachments ..... 82 – 89
Langgliedrige Förderketten mit Sonder-Anbauteilen
Double pitch conveyor chain with extended pins ..... 90 – 92
Langgliedrige Förderketten mit Mitnehmerbolzen
Double plus chains ..... 93 – 94
Stauförderketten
Lumber conveyor chains & attachments ..... 95 – 97
Förderketten für die Holzindustrie & Anbauteile
Sharp top chains ..... 98 – 108
Förderketten mit verzahnten Laschen
Roller chain with vulcanised elastomer profiles ..... 109 – 115
Rollenketten mit aufvulkanisiertem Gummiprofil
Roller chain with U type attachments ..... 116 – 117
Rollenketten mit Sonder-Anbauteilen, U-Bügel
Roller chain with plastic attachments 118
Rollenketten mit Traglaschen aus Kunststoff
Plastic chains ..... 119 – 121
Rollenketten mit Anbauteilen aus Kunststoff
Roller chain with plastic rollers 122
Rollenketten mit Rollen aus Kunststoff
Various conveyor chains 123
Verschiedene Förderketten
Conveyor chains (M series) ..... 124 – 127
Förderketten (M Serie)
Conveyor chain with attachments (M series) ..... 128 – 133
Förderketten mit Befestigungslaschen (M Serie)
Conveyor chains (MT series) 134
Förderketten (MT Serie)
Hollow pin conveyor chains (MC series) 135
Förderketten mit Hohlbolzen (MC Serie)
Conveyor chains (FV series) 136
Förderketten (FV Serie)
Conveyor chain with attachments (FV series) ..... 137 – 139
Förderketten mit Befestigungslaschen (FV Serie)

Conveyor chains (FVT series) 140
Förderketten (FVT Serie)
Hollow pin conveyor chains (FVC series) 141
Förderketten mit Hohlbolzen (FVC Serie)
Non-standard hollow pin conveyor chains 142
Nicht-Standard Förderketten mit Hohlbolzen
Conveyor chains (Z series) 143
Förderketten (Z Serie)
Conveyor chain with attachments (Z series) 144
Förderketten mit Befestigungslaschen (Z Serie)
Conveyor chains (ZE series) 145
Förderketten (ZE Serie)
Hollow pin conveyor chains (ZC series) 146
Förderketten mit Hohlbolzen (ZC Serie)
Conveyor chains ..... 147 – 150
Förderketten
Conveyor chain with attachments ..... 151 – 163
Förderketten mit Befestigungslaschen
Steel chains for sewage disposal 163
Sonderketten für die Abwasserentsorgung
Special conveyor chains 164
Sonderförderketten
Universal movement conveyor chains ..... 165 – 166
Kardanketten für Kreisförderer
Conveyor chains for hoisting 167
Hebezeugketten
Welded conveyor chains ..... 168 – 169
Geschweißte Förderketten
Roller chains for textile machinery 169
Rollenketten für Textilmaschinen
Roller chains for folio transport (Gripper) 170
Rollenketten für den Folientransport
Support chains 170
Rollenketten für die Papierindustrie
78PF1 conveyor chains 171
78PF1 Förderketten
Conveyor chains for paper mill ..... 171 – 173
Förderketten für die Papierindustrie

Conveyor chains for metal decorating system ..... 174 – 176
Rollenketten für Lackier- und Trocknungsanlagen
To top chain-curved movement ..... 177 – 178
Plattenbandketten
Double flex chains 178
Double flex Ketten
Hollow pin chains ..... 179 – 187
Ketten mit Hohlbolzen
Engineering bush chains 188
Buchsenförderketten
Engineering bush chain with attachments ..... 188 – 190
Anbauteile für Buchsenförderketten
Escalator step-chains ..... 191 – 196
Fahrtreppenketten
Conveyor chains for steel mill ..... 197 – 206
Förderketten für die Stahlindustrie
Scraper conveyor chains ..... 207 – 212
Kratzer-Förderketten
Welded steel chains ..... 213 – 214
Geschweißte Rotaryketten
Welded steel chain with attachments ..... 215 – 218
Befestigungslaschen für geschweißte Rotaryketten
Steel pintle chains ..... 219 – 220
Stahlbolzenketten
Steel pintle chain with attachments ..... 221 – 223
Anbauteile für Stahlbolzenketten
Conveyor chains for fibreboard equipment 224
Förderketten für Anlagen zur Herstellung der Furnierholzplatten
Conveyor chains for crawler asphalt paver ..... 225 – 226
Förderketten für den Straßenbau
Palm oil chains ..... 227 – 228
Ketten für die Palmölindustrie
Sugar chains ..... 229 – 230
Ketten für die Zuckerindustrie
Flat-top conveyor chains ..... 231 – 232
Scharnierbandketten

C STAINLESS STEEL CHAINS *ROLLENKETTEN AUS ROSTFREIEM STAHL* 233–240

Stainless steel roller chains 235
Rollenketten aus rostfreiem Stahl
Short pitch stainless steel conveyor chain with attachments 236
Anbauteile für Förderketten aus rostfreiem Stahl
Double pitch stainless steel conveyor chains 237
Langgliedrige Förderketten aus rostfreiem Stahl
Double pitch stainless steel conveyor chain with attachments 238
Anbauteile für Förderketten aus rostfreiem Stahl
Stainless steel hollow pin chains ..... 239 – 240
Hohlbolzenketten aus rostfreiem Stahl

D HOISTING CHAINS *FLYERKETTEN FÜR HUBGERÄTE* 241–258

Car parking chains 243
Ketten für den Autoparklift
Leaf chains ..... 244 – 254
Flyerketten
Leaf chains for sky stacker ..... 255 – 256
Flyerketten für Containerkräne
Multiple plate bearing pin chains 257
Gallketten
Rollerless lift chains 258
Buchsenketten für Hubgeräte

E AGRICULTURAL CHAINS *LANDMASCHINENKETTEN* 259–324

SH series high strength heavy duty short pitch roller chains 261
Verstärkte Hochleistungsrollenketten (SH Serie)
SP series high strength short pitch roller chains ..... 262 – 264
Verstärkte Hochleistungsrollenketten (SP Serie)
Walking tractor chains 265
Ketten für den Einachstraktor
Combine chains ..... 266 – 268
Ketten für den Mähdrescher

ZGS38 combine chain with attachments ..... 269 – 270
ZGS38 Ketten für den Mähdrescher und Anbauteile
Rice harvester chains ..... 271 – 278
Ketten für die Reiserntemaschine
Various agricultural chain with attachments 279
Verschiedene Landmaschinenketten und Anbauteile
S type steel agricultural chains ..... 280 – 281
Landmaschinenketten S-Typ
S type steel agricultural chain with attachments ..... 282 – 291
Anbauteile für Landmaschinenketten S-Typ
A type steel agricultural chains 292
Landmaschinenketten A-Typ
CA type steel agricultural chains ..... 292 – 293
Landmaschinenketten CA-Typ
C type steel agricultural chain with attachments ..... 294 – 321
Anbauteile für Landmaschinenketten C-Typ
Special agricultural chains with attachments ..... 322 – 324
Sonder-Landmaschinenketten und Anbauteile
Selection of chain drive power ..... 325 – 327
Auswahl der Kettenleistung
Selection of lubrications ..... 328 – 332
Auswahl der Schmierung

SOME CHAINS FOR APPLICATION
BEISPIELE DER KETTENANWENDUNG



1. Drive chain for gearbox
Antriebsketten für Getriebegehäuse



2. Drive chain for escalator
Antriebsketten für Fahrtreppen



3. Drive chain for oil field
Antriebsketten für Erdölfelder



4. Drive chain for engineering machinery
Antriebsketten für Fördermaschinen



5. Port machinery driving chain
Antriebsketten für Hafenanlagen



6. Port machinery driving chain
Antriebsketten für Hafenanlagen

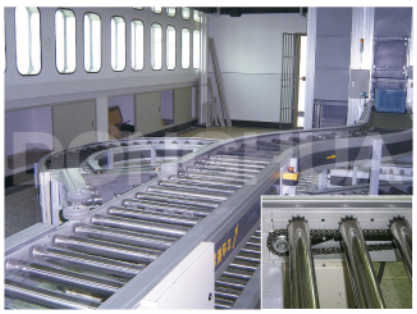

7. Conveyor chain
Antriebsketten für Förderer



8. Driving chain for gear-box
Antriebsketten für Getriebegehäuse



9. Lathe driving chain
Antriebsketten für Drehmaschinen



10. Machinery driving chain
Antriebsketten für Maschinenantriebe

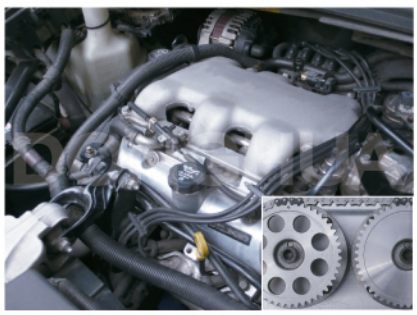

11. Engine timing chain
Steuerketten



12. ATV driving chain
ATV-Antriebsketten

SOME CHAINS FOR APPLICATION
BEISPIELE DER KETTENANWENDUNG



13. Step-chain for escalator
Fahrtreppenketten



14. Horizontal moving sidewalk escalator chain
Ketten für Fahrsteige



15. Conveyor chain for crawler asphalt paver
Förderketten für den Straßenbau



16. Conveyor chain for palm oil mill
Förderketten für die Palmölindustrie

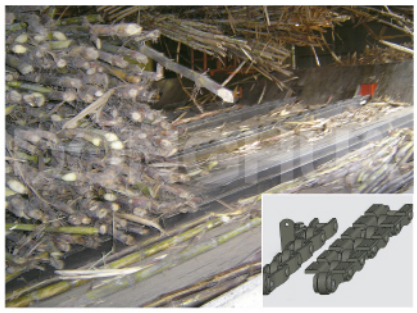

17. Conveyor chain for sugar refinery
Förderketten für die Zuckerindustrie

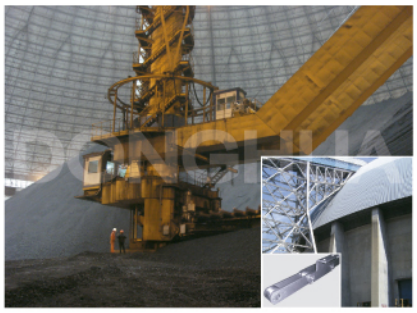

18. Conveyor chain for spherical coal yards
Förderketten für Kohlenlagerplatz



19. Conveyor chain for saw mill
Förderketten für die Holzindustrie

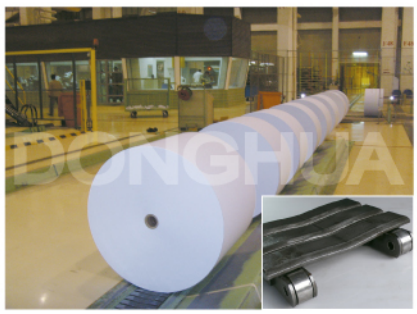

20. Conveyor chain for paper mill
Förderketten für die Papierindustrie



21. Conveyor chain for cement mill
Förderketten für die Zementindustrie



22. Conveyor chain for steel mill
Förderketten für die Stahlindustrie



23. Conveyor chain for steel mill
Förderketten für die Stahlindustrie

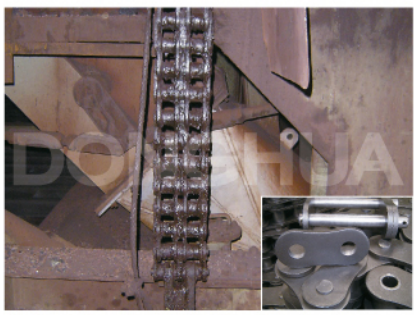

24. Steel mill balance chain
Ausgleichsketten für die Stahlindustrie

SOME CHAINS FOR APPLICATION
BEISPIELE DER KETTENANWENDUNG



25. Coupling chain
Kupplungsketten

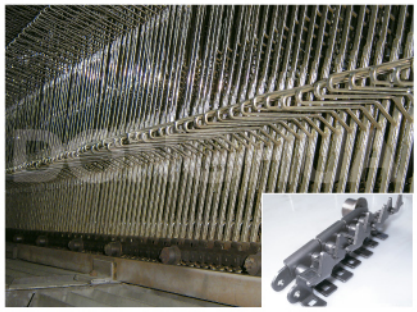

26. Conveyor chain for drying room
Rollenketten für Lackier- und Trocknungsanlagen



27. Auto pushing window chain
Rückensteife Ketten für Fensteröffner



28. Conveyor chain for automobile painting
Förderketten für Lackiersysteme in der Automobilindustrie



29. Car parking chain
Ketten für den Autoparklift



30. Leaf chain for sky stacker
Flyerketten für Containerkräne



31. Leaf chain for fork lift truck
Flyerketten für den Gabelstapler



32. Binding machinery chain
Ketten für Rundballenpressen



33. Corn harvester chain
Ketten für Maiserntemaschinen



34. Agriculture hoisting chain
Elevatorketten für Landmaschinen



35. Agriculture feed chain
Einzugsketten für Landmaschinen



36. Agriculture feed chain
Einzugsketten für Landmaschinen



There are 25 km between two factories
Die beden Standorte sind voneinander 25km entfernt.

DONGHUA

DONGHUA CHAIN

DONGHUA

Hangzhou Donghua Chain Group Co., Ltd.
No. 218 Jichang Road
Hangzhou 310021, China
Phone: +86 571 85144575 · 85144947
Fax: +86 571 85042767
hdl@dhchain.com
www.dhchain.com

Donghua Industries Europe GmbH
Fixheider Straße 14
51381 Leverkusen, Germany
Phone: +49 2171 39448-0
Fax: +49 2171 39448-60
info@donghua-europe.com
www.donghua-europe.com

Donghua International BV
Toermalijnstraat 6B
1812 RL Alkmaar, The Netherlands
Phone: +31 72 8200 120
Fax: +31 72 540 1996
info@donghua.eu
www.donghua.eu

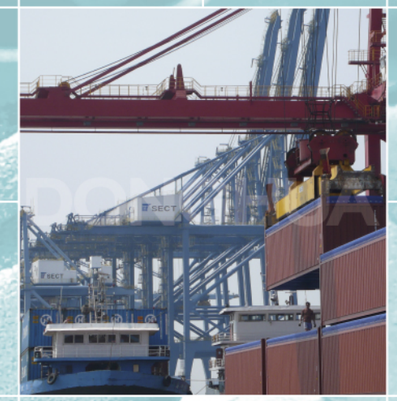



DRIVING CHAINS
ANTRIEBSKETTEN

Short pitch precision roller chains (A series)
Hochleistungsrollenketten (A Serie)

Simplex roller chains & bushing chains
Einfach-Rollenketten & Buchsenketten



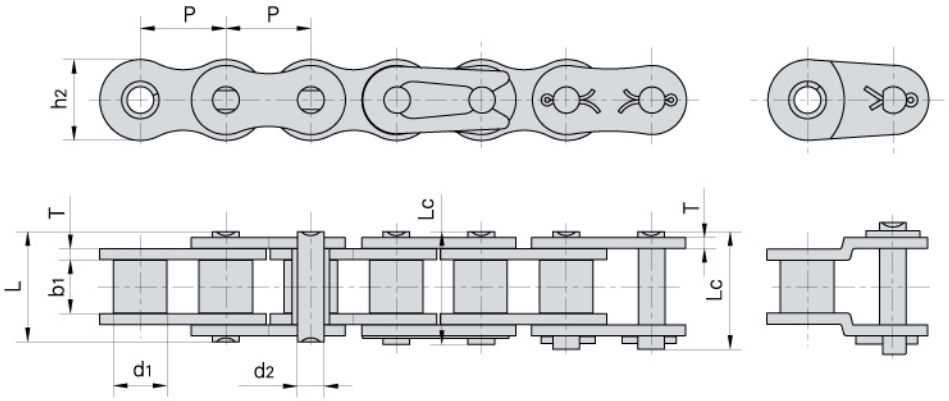

DIN/ISO Chain No. / *DIN/ISO Ketten Nr.*	ANSI Chain No. / *ANSI Ketten Nr.*	Pitch / *Teilung*	Roller diameter / *Rollen-durch-messer*	Width between inner plates / *Innere Breite*	Pin diameter / *Bolzen-durch-messer*	Pin length / *Bolzen-länge*		Inner plate depth / *Innen-laschen-höhe*	Plate thickness / *Laschen-dicke*	Ultimate tensile strength / *Min. Bruchkraft*	Average tensile strength / *Durchschn. Bruchkraft*	Weight per meter / *Gewicht*
		P	d1 max	b1 min	d2 max	L max	Lc max	h2 max	T max	Q min	Q0	q
		mm	mm	mm	mm	mm	mm	mm	mm	kN/LB	kN	kg/m
*03C	*15	4.7625	2.48	2.38	1.62	6.10	6.90	4.30	0.60	1.80/409	2.0	0.08
*04C–1	*25	6.350	3.30	3.18	2.31	7.90	8.40	6.00	0.80	3.50/795	4.6	0.15
*06C–1	*35	9.525	5.08	4.77	3.58	12.40	13.17	9.00	1.30	7.90/1795	10.8	0.33
085–1	41	12.700	7.77	6.25	3.58	13.75	15.00	9.91	1.30	6.67/1516	12.6	0.41
08A–1	40	12.700	7.95	7.85	3.96	16.60	17.80	12.00	1.50	14.10/3205	17.5	0.62
10A–1	50	15.875	10.16	9.40	5.08	20.70	22.20	15.09	2.03	22.20/5045	29.4	1.02
12A–1	60	19.050	11.91	12.57	5.94	25.90	27.70	18.00	2.42	31.80/7227	41.5	1.50
16A–1	80	25.400	15.88	15.75	7.92	32.70	35.00	24.00	3.25	56.70/12886	69.4	2.60
20A–1	100	31.750	19.05	18.90	9.53	40.40	44.70	30.00	4.00	88.50/20114	109.2	3.91
24A–1	120	38.100	22.23	25.22	11.10	50.30	54.30	35.70	4.80	127.00/28864	156.3	5.62
28A–1	140	44.450	25.40	25.22	12.70	54.40	59.00	41.00	5.60	172.40/39182	212.0	7.50
32A–1	160	50.800	28.58	31.55	14.27	64.80	69.60	47.80	6.40	226.80/51545	278.9	10.10
36A–1	180	57.150	35.71	35.48	17.46	72.80	78.60	53.60	7.20	280.20/63682	341.8	13.45
40A–1	200	63.500	39.68	37.85	19.85	80.30	87.20	60.00	8.00	353.80/80409	431.6	16.15
48A–1	240	76.200	47.63	47.35	23.81	95.50	103.00	72.39	9.50	510.30/115977	622.5	23.20

*Bushing chain: d1 in the table indicate the external diameter of the bushing.
**Buchsenketten: In dieser Tabelle zeigt d1 den Außendurchmesser der Buchsen.*

Short pitch precision roller chains (A series)
Hochleistungsrollenketten (A Serie)

Duplex roller chains & bushing chains
Zweifach-Rollenketten & Buchsenketten



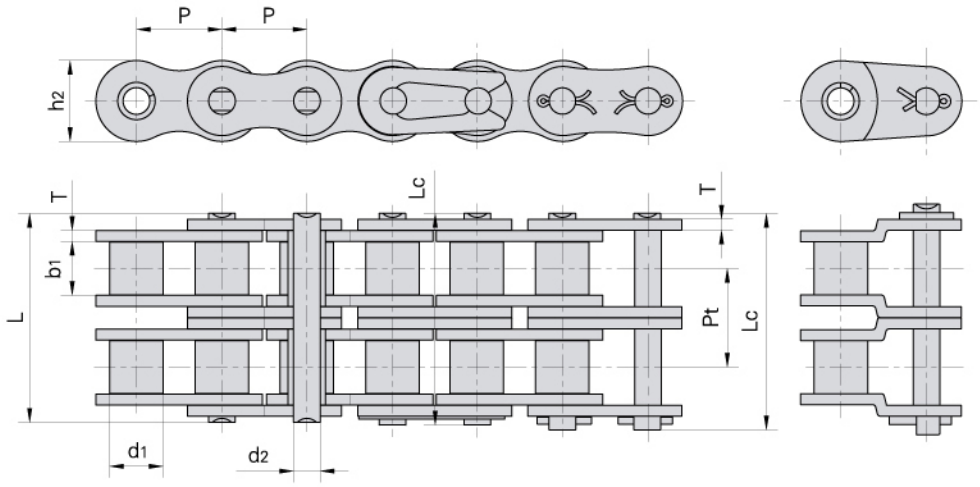

DIN/ISO Chain No. *DIN/ISO Ketten Nr.*	ANSI Chain No. *ANSI Ketten Nr.*	Pitch *Teilung* P mm	Roller diameter *Rollen-durch-messer* d_1 max mm	Width between inner plates *Innere Breite* b_1 min mm	Pin diameter *Bolzen-durch-messer* d_2 max mm	Pin length *Bolzen-länge* L max mm	Pin length *Bolzen-länge* Lc max mm	Inner plate depth *Innen-laschen-höhe* h_2 max mm	Plate thickness *Laschen-dicke* T max mm	Transverse pitch *Mitten-abstand* P_t mm	Ultimate tensile strength *Min. Bruchkraft* Q min kN/LB	Average tensile strength *Durchschn. Bruchkraft* Q_0 kN	Weight per meter *Gewicht* q kg/m
*04C–2	*25–2	6.350	3.30	3.18	2.31	14.5	15.0	6.00	0.80	6.40	7.00/1591	8.6	0.28
*06C–2	*35–2	9.525	5.08	4.77	3.58	22.5	23.3	9.00	1.30	10.13	15.80/3591	19.7	0.63
085–2	41–2	12.700	7.77	6.25	3.58	25.7	26.9	9.91	1.30	11.95	13.34/3032	16.9	0.81
08A–2	40–2	12.700	7.95	7.85	3.96	31.0	32.2	12.00	1.50	14.38	28.20/6409	35.9	1.12
10A–2	50–2	15.875	10.16	9.40	5.08	38.9	40.4	15.09	2.03	18.11	44.40/10091	58.1	2.00
12A–2	60–2	19.050	11.91	12.57	5.94	48.8	50.5	18.00	2.42	22.78	63.60/14455	82.1	2.92
16A–2	80–2	25.400	15.88	15.75	7.92	62.7	64.3	24.00	3.25	29.29	113.40/25773	141.8	5.15
20A–2	100–2	31.750	19.05	18.90	9.53	76.4	80.5	30.00	4.00	35.76	177.00/40227	219.4	7.80
24A–2	120–2	38.100	22.23	25.22	11.10	95.8	99.7	35.70	4.80	45.44	254.00/57727	314.9	11.70
28A–2	140–2	44.450	25.40	25.22	12.70	103.3	107.9	41.00	5.60	48.87	344.80/78364	427.5	15.14
32A–2	160–2	50.800	28.58	31.55	14.27	123.3	128.1	47.80	6.40	58.55	453.60/103091	562.4	20.14
36A–2	180–2	57.150	35.71	35.48	17.46	138.6	144.4	53.60	7.20	65.84	560.50/127386	695.0	29.22
40A–2	200–2	63.500	39.68	37.85	19.85	151.9	158.8	60.00	8.00	71.55	707.60/160818	877.4	32.24
48A–2	240–2	76.200	47.63	47.35	23.81	183.4	190.8	72.39	9.50	87.83	1020.60/213955	1255.3	45.23

*Bushing chain: d1 in the table indicate the external diameter of the bushing.
**Buchsenketten: In dieser Tabelle zeigt d1 den Außendurchmesser der Buchsen.*

Short pitch precision roller chains (A series)
Hochleistungsrollenketten (A Serie)

Triplex roller chains & bushing chains
Dreifach-Rollenketten & Buchsenketten

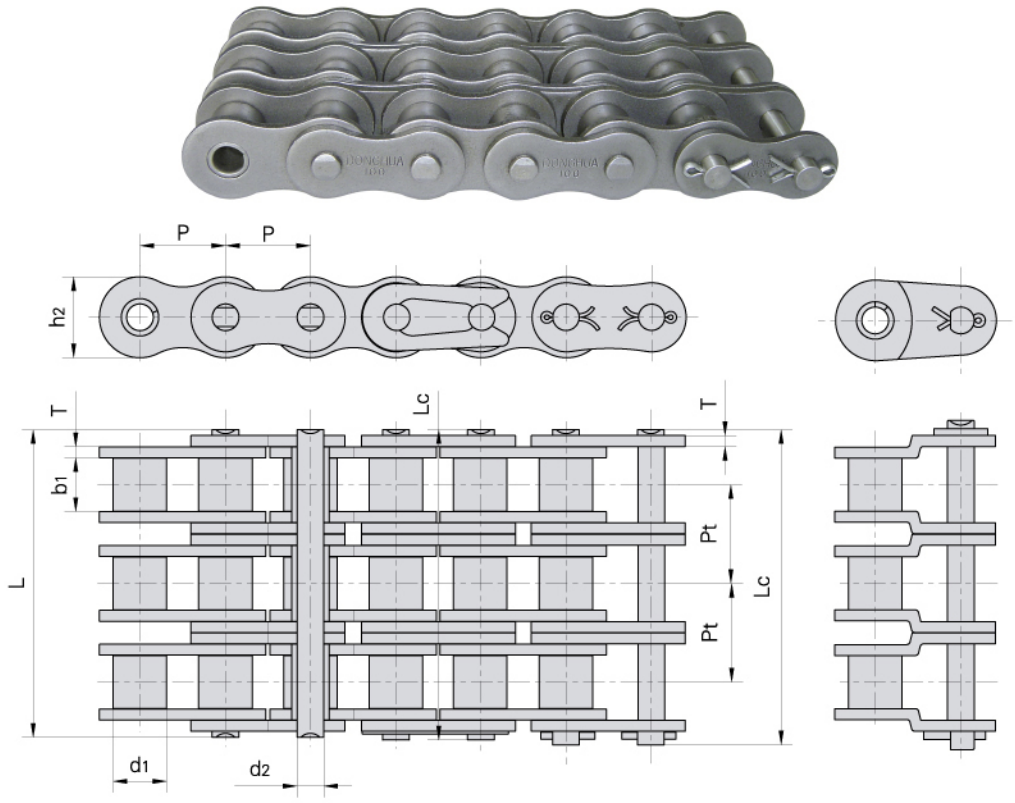

DIN/ISO Chain No. *DIN/ISO Ketten Nr.*	ANSI Chain No. *ANSI Ketten Nr.*	Pitch *Teilung* P	Roller diameter *Rollen-durch-messer* d1 max	Width between inner plates *Innere Breite* b1 min	Pin diameter *Bolzen-durch-messer* d2 max	Pin length *Bolzen-länge* L max	Pin length *Bolzen-länge* Lc max	Inner plate depth *Innen-laschen-höhe* h2 max	Plate thickness *Laschen-dicke* T max	Transverse pitch *Mitten-abstand* Pt	Ultimate tensile strength *Min. Bruchkraft* Q min	Average tensile strength *Durchschn. Bruchkraft* Q0	Weigth per meter *Gewicht* q
		mm	mm	mm	mm	mm	mm	mm	mm	mm	kN/LB	kN	kg/m
*04C–3	*25–3	6.350	3.30	3.18	2.31	21.0	21.5	6.00	0.80	6.40	10.5/2386	12.6	0.44
*06C–3	*35–3	9.525	5.08	4.77	3.58	32.7	33.5	9.00	1.30	10.13	23.7/5386	28.6	1.05
08A–3	40–3	12.700	7.95	7.85	3.96	45.4	46.6	12.00	1.50	14.38	42.3/9614	50.0	1.90
10A–3	50–3	15.875	10.16	9.40	5.08	57.0	58.5	15.09	2.03	18.11	66.6/15136	77.8	3.09
12A–3	60–3	19.050	11.91	12.57	5.94	71.5	73.3	18.00	2.42	22.78	95.4/21682	111.1	4.54
16A–3	80–3	25.400	15.88	15.75	7.92	91.7	93.6	24.00	3.25	29.29	170.1/38659	198.4	7.89
20A–3	100–3	31.750	19.05	18.90	9.53	112.2	116.3	30.00	4.00	35.76	265.5/60341	309.6	11.77
24A–3	120–3	38.100	22.23	25.22	11.10	141.4	145.2	35.70	4.80	45.44	381.0/86591	437.2	17.53
28A–3	140–3	44.450	25.40	25.22	12.70	152.2	156.8	41.00	5.60	48.87	517.2/117545	593.3	22.20
32A–3	160–3	50.800	28.58	31.55	14.27	181.8	186.6	47.80	6.40	58.55	680.4/154636	780.6	30.02
36A–3	180–3	57.150	35.71	35.48	17.46	204.4	210.2	53.60	7.20	65.84	840.7/191068	983.6	38.22
40A–3	200–3	63.500	39.68	37.85	19.85	223.5	230.4	60.00	8.00	71.55	1061.4/241227	1217.8	49.03
48A–3	240–3	76.200	47.63	47.35	23.81	271.3	278.6	72.39	9.50	87.83	1530.9/347932	1756.5	71.60

*Bushing chain: d1 in the table indicate the external diameter of the bushing.
**Buchsenketten: In dieser Tabelle zeigt d1 den Außendurchmesser der Buchsen.*

Short pitch precision roller chains (A series)
Hochleistungsrollenketten (A Serie)

Multiple strand roller chains
Mehrfach-Rollenketten

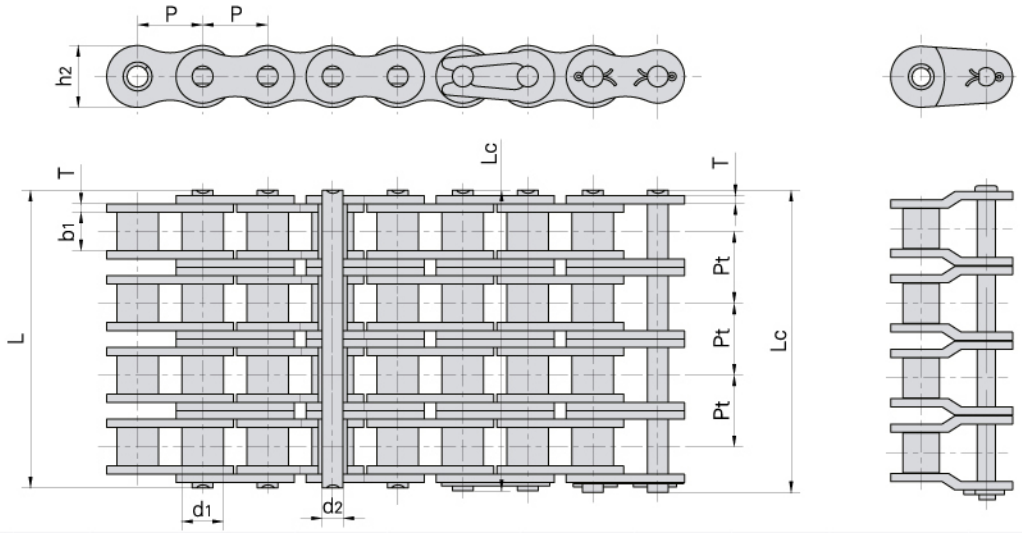

Donghua Chain No. *Donghua Ketten Nr.*	ANSI Chain No. *ANSI Ketten Nr.*	Pitch *Teilung* P mm	Roller diameter *Rollen-durch-messer* d1 max mm	Width between inner plates *Innere Breite* b1 min mm	Pin diameter *Bolzen-durch-messer* d2 max mm	Pin length *Bolzen-länge* L max mm	Pin length *Bolzen-länge* Lc max mm	Inner plate depth *Innen-laschen-höhe* h2 max mm	Plate thickness *Laschen-dicke* T max mm	Transverse pitch *Mitten-abstand* Pt mm	Ultimate tensile strength *Min. Bruchkraft* Q min kN/LB	Average tensile strength *Durchschn. Bruchkraft* Q0 kN	Weight per meter *Gewicht* q kg/m
08A–4	40–4	12.700	7.95	7.85	3.96	59.8	61.0	12.00	1.50	14.38	56.4/12687	62.04	2.57
10A–4	50–4	15.875	10.16	9.40	5.08	75.1	76.6	15.09	2.03	18.11	88.8/19976	97.68	4.30
12A–4	60–4	19.050	11.91	12.57	5.94	94.4	96.1	18.00	2.42	22.78	127.2/28614	139.92	6.21
16A–4	80–4	25.400	15.88	15.75	7.92	121.0	124.4	24.00	3.25	29.29	226.8/51020	249.48	10.37
20A–4	100–4	31.750	19.05	18.90	9.53	147.8	152.1	30.00	4.00	35.76	354/79635	389.40	15.60
24A–4	120–4	38.100	22.23	25.22	11.10	187.0	190.8	35.70	4.80	45.44	508/114278	558.80	23.56
08A–5	40–5	12.700	7.95	7.85	3.96	74.2	75.4	12.00	1.50	14.38	70.5/15859	77.55	3.19
10A–5	50–5	15.875	10.16	9.40	5.08	93.2	94.7	15.09	2.03	18.11	111/24970	122.10	5.37
12A–5	60–5	19.050	11.91	12.57	5.94	117.0	118.8	18.00	2.42	22.78	159/35768	174.90	7.75
16A–5	80–5	25.400	15.88	15.75	7.92	149.9	153.7	24.00	3.25	29.29	283.5/63775	311.85	12.96
20A–5	100–5	31.750	19.05	18.90	9.53	183.6	187.9	30.00	4.00	35.76	442.5/99543	486.75	19.46
24A–5	120–5	38.100	22.23	25.22	11.10	232.3	236.1	35.70	4.80	45.44	635/142848	698.50	29.40
08A–6	40–6	12.700	7.95	7.85	3.96	88.5	89.8	12.00	1.50	14.38	84.6/19031	93.06	3.83
10A–6	50–6	15.875	10.16	9.40	5.08	111.3	112.8	15.09	2.03	18.11	133.2/29964	146.52	6.43
12A–6	60–6	19.050	11.91	12.57	5.94	139.8	141.8	18.00	2.42	22.78	190.8/42921	209.80	9.31
16A–6	80–6	25.400	15.88	15.75	7.92	179.2	183.0	24.00	3.25	29.29	340.2/76530	374.22	15.50
20A–6	100–6	31.750	19.05	18.90	9.53	219.4	223.7	30.00	4.00	35.76	531/119452	584.10	23.36
24A–6	120–6	38.100	22.23	25.22	11.10	278.0	282.0	35.70	4.80	45.44	762/171417	838.20	35.30
08A–8	40–8	12.700	7.95	7.85	3.96	117.3	118.5	12.00	1.50	14.38	112.8/25375	124.08	5.11
10A–8	50–8	15.875	10.16	9.40	5.08	147.5	149.0	15.09	2.03	18.11	177.6/39952	195.36	8.59
12A–8	60–8	19.050	11.91	12.57	5.94	185.8	187.6	18.00	2.42	22.78	254.4/57229	279.84	12.37
16A–8	80–8	25.400	15.88	15.75	7.92	237.8	241.6	24.00	3.25	29.29	453.6/102040	498.96	20.67
20A–8	100–8	31.750	19.05	18.90	9.53	290.8	295.1	30.00	4.00	35.76	708/159270	778.80	31.14
24A–8	120–8	38.100	22.23	25.22	11.10	368.8	372.8	35.70	4.80	45.44	1016/228557	1176	47.07

Short pitch precision roller chains (B series)
Hochleistungsrollenketten (B Serie)

Simplex roller chains
Einfach-Rollenketten



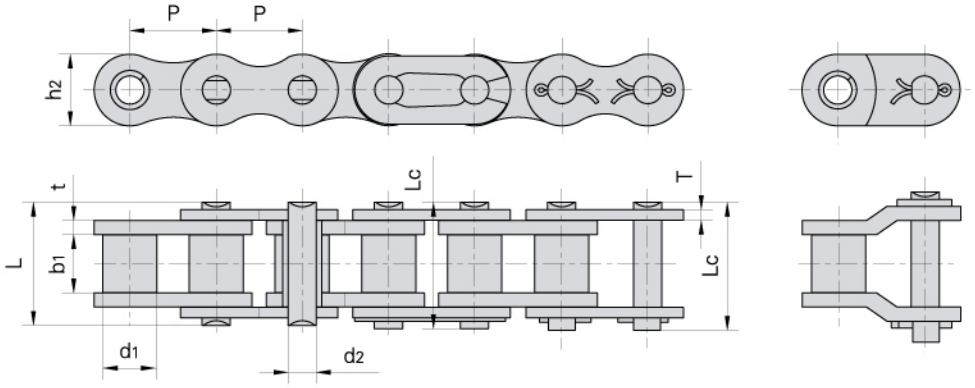

DIN/ISO Chain No. *DIN/ISO Ketten Nr.*	Pitch *Teilung*	Roller diameter *Rollen-durch-messer*	Width between inner plates *Innere Breite*	Pin diameter *Bolzen-durch-messer*	Pin length *Bolzen-länge*		Inner plate depth *Innen-laschen-höhe*	Plate thickness *Laschen-dicke*	Ultimate tensile strength *Min. Bruchkraft*	Average tensile strength *Durchschn. Bruchkraft*	Weight per meter *Gewicht*
	P	d_1 max	b_1 min	d_2 max	L max	Lc max	h_2 max	t/T max	Q min	Q_0	q
	mm	mm	mm	mm	mm	mm	mm	mm	kN/LB	kN	kg/m
04B–1	6.000	4.00	2.80	1.85	6.80	7.8	5.00	0.60	3.0/682	3.2	0.11
05B–1	8.000	5.00	3.00	2.31	8.20	8.9	7.10	0.80	5.0/1136	5.9	0.20
*06B–1	9.525	6.35	5.72	3.28	13.15	14.1	8.20	1.30	9.0/2045	10.4	0.41
08B–1	12.700	8.51	7.75	4.45	16.70	18.2	11.80	1.60	18.0/4091	19.4	0.69
10B–1	15.875	10.16	9.65	5.08	19.50	20.9	14.70	1.70	22.4/5091	27.5	0.93
12B–1	19.050	12.07	11.68	5.72	22.50	24.2	16.00	1.85	29.0/6591	32.2	1.15
16B–1	25.400	15.88	17.02	8.28	36.10	37.4	21.00	4.15/3.1	60.0/13636	72.8	2.71
20B–1	31.750	19.05	19.56	10.19	41.30	45.0	26.40	4.5/3.5	95.0/21591	106.7	3.70
24B–1	38.100	25.40	25.40	14.63	53.40	57.8	33.20	6.0/4.8	160.0/36364	178.0	7.10
28B–1	44.450	27.94	30.99	15.90	65.10	69.5	36.70	7.5/6.0	200.0/45455	222.0	8.50
32B–1	50.800	29.21	30.99	17.81	66.00	71.0	42.00	7.0/6.0	250.0/56818	277.5	10.25
40B–1	63.500	39.37	38.10	22.89	82.20	89.2	52.96	8.5/8.0	355.0/80682	394.0	16.35
48B–1	76.200	48.26	45.72	29.24	99.10	107.0	63.80	12.0/10.0	560.0/127272	621.6	25.00
56B–1	88.900	53.98	53.34	34.32	114.6	123.0	77.80	13.5/12.0	850.0/193180	940.0	35.78
64B–1	101.600	63.50	60.96	39.40	130.0	138.5	90.17	15.0/13.0	112.0/254544	1240.0	46.00
72B–1	114.300	72.39	68.58	44.48	147.4	156.4	103.60	17.0/15.0	1400.0/318180	1550.0	60.80

*Straight side plates
**Gerade Laschen*

Short pitch precision roller chains (B series)
Hochleistungsrollenketten (B Serie)

Duplex roller chains
Zweifach-Rollenketten

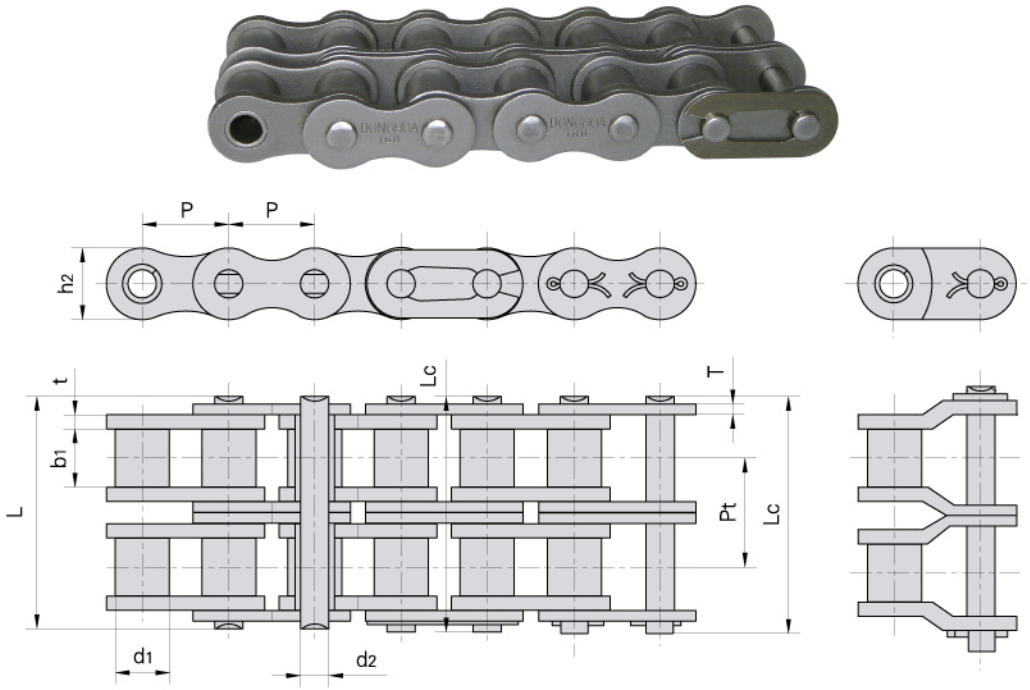

DIN/ISO Chain No. *DIN/ISO Ketten Nr.*	Pitch *Teilung*	Roller diameter *Rollen-durch-messer*	Width between inner plates *Innere Breite*	Pin diameter *Bolzen-durch-messer*	Pin length *Bolzen-länge*		Inner plate depth *Innen-laschen-höhe*	Plate thickness *Laschen-dicke*	Transverse pitch *Mitten-abstand*	Ultimate tensile strength *Min. Bruchkraft*	Average tensile strength *Durchschn. BruchKraft*	Weight per meter *Gewicht*
	P	d_1 max	b_1 min	d_2 max	L max	Lc max	h_2 max	t/T max	P_t	Q min	Q_0	q
	mm	mm	mm	mm	mm	mm	mm	mm	mm	kN/LB	kN	kg/m
05B–2	8.000	5.00	3.00	2.31	13.9	14.5	7.10	0.80	5.64	7.8/1773	10.2	0.33
*06B–2	9.525	6.35	5.72	3.28	23.4	24.4	8.20	1.30	10.24	16.9/3841	18.7	0.77
08B–2	12.700	8.51	7.75	4.45	31.0	32.2	11.80	1.60	13.92	32.0/7273	38.7	1.34
10B–2	15.875	10.16	9.65	5.08	36.1	37.5	14.70	1.70	16.59	44.5/10114	56.2	1.84
12B–2	19.050	12.07	11.68	5.72	42.0	43.6	16.00	1.85	19.46	57.8/13136	66.1	2.31
16B–2	25.400	15.88	17.02	8.28	68.0	69.3	21.00	4.15/3.1	31.88	106.0/24091	133.0	5.42
20B–2	31.750	19.05	19.56	10.19	77.8	81.5	26.40	4.5/3.5	36.45	170.0/38636	211.2	7.20
24B–2	38.100	25.40	25.40	14.63	101.7	106.2	33.20	6.0/4.8	48.36	280.0/63636	319.2	13.40
28B–2	44.450	27.94	30.99	15.90	124.6	129.1	36.70	7.5/6.0	59.56	360.0/81818	406.8	16.60
32B–2	50.800	29.21	30.99	17.81	124.6	129.6	42.00	7.0/6.0	58.55	450.0/102273	508.5	21.00
40B–2	63.500	39.37	38.10	22.89	154.5	161.5	52.96	8.5/8.0	72.29	630.0/143182	711.9	32.00
48B–2	76.200	48.26	45.72	29.24	190.4	198.2	63.80	12.0/10.0	91.21	1000.0/227272	1130.0	50.00
56B–2	88.900	53.98	53.34	34.32	221.2	229.6	77.80	13.5/12.0	106.60	1600.0/363635	1760.0	71.48
64B–2	101.600	63.50	60.96	39.40	249.9	258.4	90.17	15.0/13.0	119.89	2000.0/454544	2200.0	91.00
72B–2	114.300	72.39	68.58	44.48	283.7	292.7	103.60	17.0/15.0	136.27	2500.0/568180	2750.0	120.40

*Straight side plates
**Gerade Laschen*

Short pitch precision roller chains (B series)
Hochleistungsrollenketten (B Serie)

Triplex roller chains
Dreifach-Rollenketten



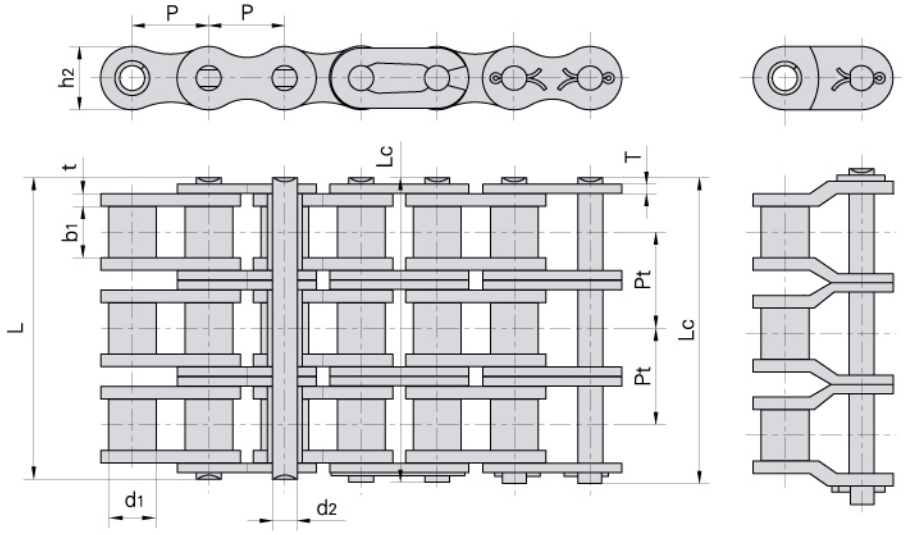

DIN/ISO Chain No. *DIN/ISO Ketten Nr.*	Pitch *Teilung* P mm	Roller diameter *Rollen-durch-messer* d_1 max mm	Width between inner plates *Innere Breite* b_1 min mm	Pin diameter *Bolzen-durch-messer* d_2 max mm	Pin length *Bolzen-länge* L max mm	 Lc max mm	Inner plate depth *Innen-laschen-höhe* h_2 max mm	Plate thickness *Laschen-dicke* t/T max mm	Transverse pitch *Mitten-abstand* Pt mm	Ultimate tensile strength *Min. Bruchkraft* Q min kN/LB	Average tensile strength *Durchschn. BruchKraft* Q_0 kN	Weight per meter *Gewicht* q kg/m
05B–3	8.000	5.00	3.00	2.31	19.5	20.2	7.10	0.80	5.64	11.1/2523	13.8	0.48
*06B–3	9.525	6.35	5.72	3.28	33.5	34.6	8.20	1.30	10.24	24.9/5659	30.1	1.16
08B–3	12.700	8.51	7.75	4.45	45.1	46.1	11.80	1.60	13.92	47.5/10795	57.8	2.03
10B–3	15.875	10.16	9.65	5.08	52.7	54.1	14.70	1.70	16.59	66.7/15159	84.5	2.77
12B–3	19.050	12.07	11.68	5.72	61.5	63.1	16.00	1.85	19.46	86.7/19705	101.8	3.46
16B–3	25.400	15.88	17.02	8.28	99.8	101.2	21.00	4.15/3.1	31.88	160.0/36364	203.7	8.13
20B–3	31.750	19.05	19.56	10.19	114.2	117.9	26.40	4.5/3.5	36.45	250.0/56818	290.0	10.82
24B–3	38.100	25.40	25.40	14.63	150.1	154.6	33.20	6.0/4.8	48.36	425.0/96591	493.0	20.10
28B–3	44.450	27.94	30.99	15.90	184.2	188.7	36.70	7.5/6.0	59.56	530.0/120454	609.5	24.92
32B–3	50.800	29.21	30.99	17.81	183.2	188.2	42.00	7.0/6.0	58.55	670.0/152273	770.5	31.56
40B–3	63.500	39.37	38.10	22.89	226.8	233.8	52.96	8.5/8.0	72.29	950.0/215909	1092.5	48.10
48B–3	76.200	48.26	45.72	29.24	281.6	289.4	63.80	12.0/10.0	91.21	1500.0/340909	1710.0	75.00
56B–3	88.900	53.98	53.34	34.32	327.8	336.2	77.80	13.5/12.0	106.6	2240.0/545450	2240.0	107.18
64B–3	101.60	63.50	60.96	39.40	369.8	378.3	90.17	15.0/13.0	119.89	3000.0/681820	3300.0	136.00
72B–3	114.30	72.39	68.58	44.48	420.0	429.0	103.60	17.0/15.0	136.27	3750.0/852270	4125.0	180.00

*Straight side plates
**Gerade Laschen*

Heavy duty series roller chains
Hochleistungsrollenketten, schwere Ausführung

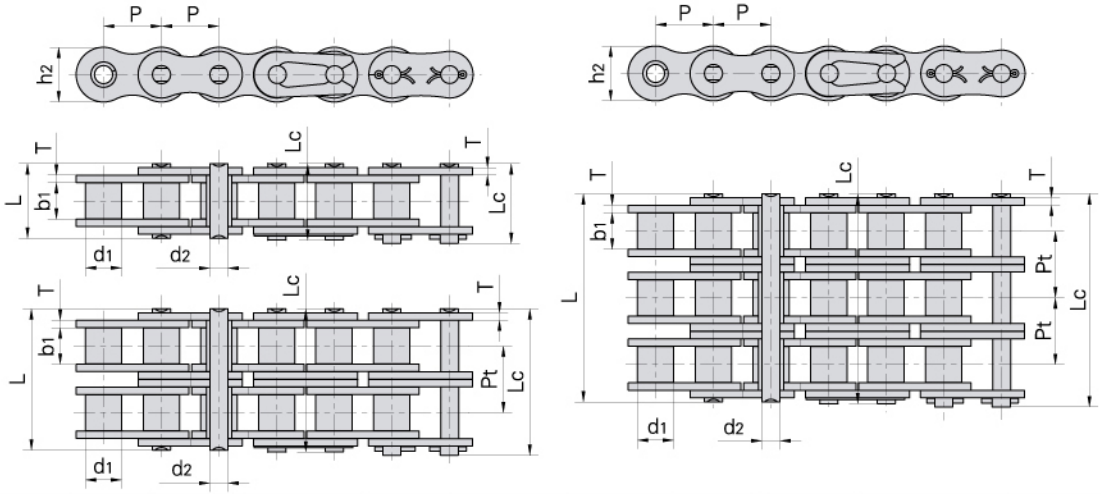

DIN/ISO Chain No. *DIN/ISO Ketten Nr.*	ANSI Chain No. *ANSI Ketten Nr.*	Pitch *Teilung* P	Roller diameter *Rollen-durch-messer* d_1 max	Width between inner plates *Innere Breite* b_1 min	Pin diameter *Bolzen-durch-messer* d_2 max	Pin length *Bolzen-länge* L max	Lc max	Inner plate depth *Innen-laschen-höhe* h_2 max	Plate thickness *Laschen-dicke* T max	Transverse pitch *Mitten-abstand* Pt	Ultimate tensile strength *Min. Bruchkraft* Q min	Average tensile strength *Durchschn. Bruchkraft* Q_0	Weight per meter *Gewicht* q
		mm	mm	mm	mm	mm	mm	mm	mm	mm	kN/LB	kN	kg/m
	*35H–1	9.525	5.08	4.77	3.58	13.3	14.3	9.00	1.50	–	7.9/1795	10.8	0.41
08AH–1	40H–1	12.700	7.95	7.85	3.96	18.8	19.9	12.00	2.03	–	14.1/3205	19.1	0.82
10AH–1	50H–1	15.875	10.16	9.40	5.08	22.1	23.4	15.09	2.42	–	22.2/5045	30.2	1.25
12AH–1	60H–1	19.050	11.91	12.57	5.94	29.2	31.0	18.00	3.25	–	31.8/7227	42.7	1.87
16AH–1	80H–1	25.400	15.88	15.75	7.92	36.2	37.7	24.00	4.00	–	56.7/12886	71.4	3.10
20AH–1	100H–1	31.750	19.05	18.90	9.53	43.6	46.9	30.00	4.80	–	88.5/20114	112.4	4.52
24AH–1	120H–1	38.100	22.23	25.22	11.10	53.5	57.5	35.70	5.60	–	127.0/28864	160.9	6.60
28AH–1	140H–1	44.450	25.40	25.22	12.70	57.6	62.2	41.00	6.40	–	172.4/39182	217.3	8.30
32AH–1	160H–1	50.800	28.58	31.55	14.27	68.2	73.0	47.80	7.20	–	226.8/51545	285.8	10.30
36AH–1	180H–1	57.150	35.71	35.48	17.46	75.9	81.6	53.60	8.00	–	281.0/63863	341.8	14.83
40AH–1	200H–1	63.500	39.68	37.85	19.85	86.6	93.5	60.00	9.50	–	353.8/80409	444.5	19.16
48AH–1	240H–1	76.200	47.63	47.35	23.81	109.6	115.9	72.30	12.70	–	510.3/115977	622.5	30.4
12AH–2	60H–2	19.050	11.91	12.57	5.94	55.3	57.1	18.00	3.25	26.11	63.6/14455	84.5	3.71
16AH–2	80H–2	25.400	15.88	15.75	7.92	68.8	70.3	24.00	4.00	32.59	113.4/25773	145.3	6.15
20AH–2	100H–2	31.750	19.05	18.90	9.53	82.7	86.0	30.00	4.80	39.09	177.0/40227	225.9	9.03
24AH–2	120H–2	38.100	22.23	25.22	11.10	102.4	106.4	35.70	5.60	48.87	254.0/57727	322.7	13.13
28AH–2	140H–2	44.450	25.40	25.22	12.70	109.8	114.4	41.00	6.40	52.20	344.8/78364	437.7	16.60
32AH–2	160H–2	50.800	28.58	31.55	14.27	130.1	134.9	47.80	7.20	61.90	453.6/103091	571.6	20.20
40AH–2	200H–2	63.500	39.68	37.85	19.85	164.9	171.8	60.00	9.50	78.31	707.6/160818	894.9	38.11
12AH–3	60H–3	19.050	11.91	12.57	5.94	81.4	83.2	18.00	3.25	26.11	95.4/21682	113.9	5.54
16AH–3	80H–3	25.400	15.88	15.75	7.92	101.4	102.9	24.00	4.00	32.59	170.1/38659	203.5	9.42
20AH–3	100H–3	31.750	19.05	18.90	9.53	121.8	125.1	30.00	4.80	39.09	265.5/60341	314.8	12.96
24AH–3	120H–3	38.100	22.23	25.22	11.10	151.2	155.2	35.70	5.60	48.87	381.0/86591	444.7	19.64
28AH–3	140H–3	44.450	25.40	25.22	12.70	162.0	166.6	41.00	6.40	52.20	517.2/117545	598.4	24.90
32AH–3	160H–3	50.800	28.58	31.55	14.27	192.0	196.8	47.80	7.20	61.90	680.4/154636	787.3	30.10
40AH–3	200H–3	63.500	39.68	37.85	19.85	243.2	250.1	60.00	9.50	78.31	1061.4/241227	1228.2	57.06

*Bushing chain:d_1 in the table indicate the external diameter of the bushing
**Buchsenketten: In dieser Tabelle zeigt d1 den Außendurchmesser der Buchsen.*

Heavy duty series roller chains
Hochleistungsrollenketten, schwere Ausführung

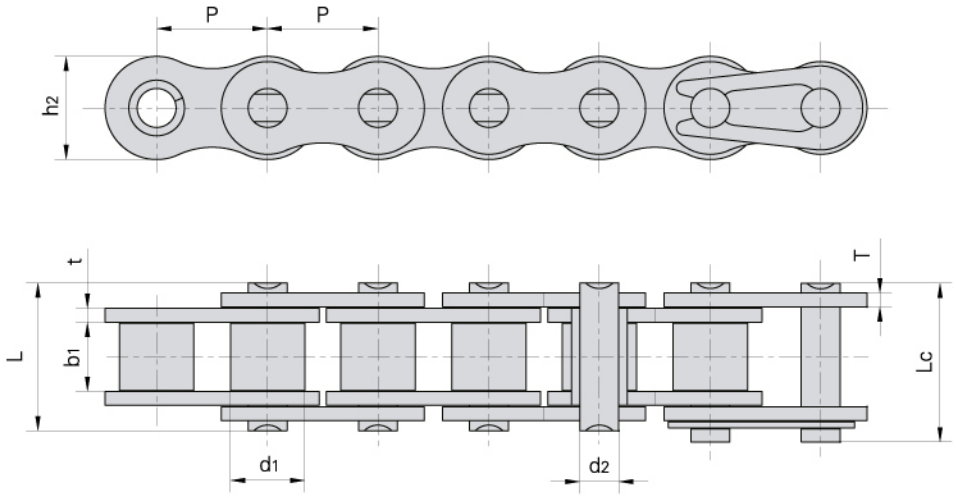

Donghua Chain No. *Donghua Ketten Nr.*	Pitch *Teilung*	Roller diameter *Rollen-durch-messer*	Width between inner plates *Innere Breite*	Pin diameter *Bolzen-durch-messer*	Pin length *Bolzen-länge*		Inner plate depth *Innen-laschen-höhe*	Plate thickness *Laschen-dicke*	Ultimate tensile strength *Min. Bruchkraft*	Weight per meter *Gewicht*
	P	d_1 max	b_1 min	d_2 max	L max	Lc max	h_2 max	t/T	Q min	q
	mm	mm	mm	mm	mm	mm	mm	mm	kN/LB	kg/m
04BH	6.000	4.00	2.80	1.85	8.4	9.4	5.0	0.9	5.0/1136	0.14
*06BH	9.525	6.35	5.72	3.58	14.4	15.4	8.2	1.6	11.25/2557	0.51
08BH	12.700	8.51	7.85	4.45	18.8	19.9	11.8	2.03	20.6/4682	0.79
10BH	15.875	10.16	9.65	5.08	20.2	21.6	14.7	1.85	25.0/5681	1.03
12BH	19.050	12.07	11.68	5.94	25.2	26.8	16.0	2.42	40.0/9091	1.45
12BV	19.050	12.07	11.68	6.10	24.5	26.5	16.0	2.42	36.00/8182	1.43
12BHF2	19.050	12.07	13.50	5.72	28.8	30.3	16.5	2.80	35.0/7954	1.71
16BH	25.400	15.88	17.02	8.90	35.7	38.9	24.1	4.0/3.1	80.0/18182	3.11
24BH	38.100	25.40	25.40	14.63	58.6	63.4	36.2	7.5/6.0	225.0/51136	9.00
24BHF2	38.100	25.40	25.40	14.63	57.8	62.2	37.0	7.2/6.0	225.4/51227	9.10

*straight side plates
**Gerade Laschen*

Cottered type short pitch precision roller chains (A series)
Hochleistungsrollenketten mit Splinten (A Serie)

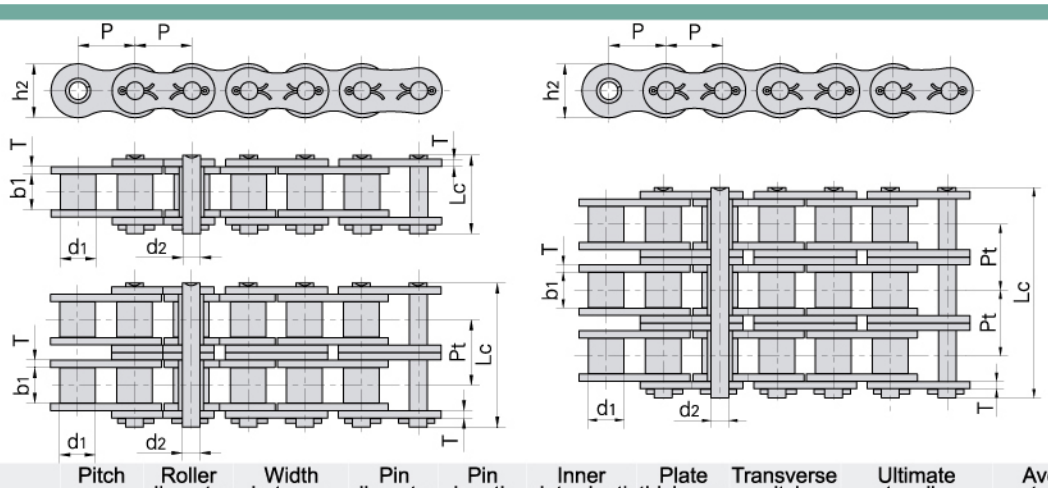

DIN/ISO Chain No.	ANSI Chain No.	Pitch	Roller diameter	Width between inner plates	Pin diameter	Pin length	Inner plate depth	Plate thickness	Transverse pitch	Ultimate tensile strength	Average tensile strength	Weight per meter
		Teilung	*Rollen-durch-messer*	*Innere Breite*	*Bolzen-durch-messer*	*Bolzen-länge*	*Innen-laschen-höhe*	*Laschen-dicke*	*Mitten-abstand*	*Min. Bruchkraft*	*Durchschn. Bruchkraft*	*Gewicht*
DIN/ISO Ketten Nr.	*ANSI Ketten Nr.*	P	d_1 max	b_1 min	d_2 max	Lc max	h_2 max	T max	Pt	Q min	Q_0	q
		mm	mm	mm	mm	mm	mm	mm	mm	kN/LB	kN	kg/m
10A–1	50–1	15.875	10.16	9.40	5.08	23.3	15.09	2.03	–	22.2/5045	29.4	1.02
12A–1	60–1	19.050	11.91	12.57	5.94	28.3	18.00	2.42	–	31.8/7227	41.5	1.50
16A–1	80–1	25.400	15.88	15.75	7.92	36.5	24.00	3.25	–	56.7/12886	69.4	2.60
20A–1	100–1	31.750	19.05	18.90	9.53	44.7	30.00	4.00	–	88.5/20114	109.2	3.91
24A–1	120–1	38.100	22.23	25.22	11.10	54.3	35.70	4.80	–	127.0/28864	156.3	5.62
28A–1	140–1	44.450	25.40	25.22	12.70	59.0	41.00	5.60	–	172.4/39182	212.0	7.50
32A–1	160–1	50.800	28.58	31.55	14.27	69.6	47.80	6.40	–	226.8/51545	278.9	10.10
36A–1	180–1	57.150	35.71	35.48	17.46	78.6	53.60	7.20	–	280.2/63682	341.8	13.45
40A–1	200–1	63.500	39.68	37.85	19.85	87.2	60.00	8.00	–	353.8/80409	431.6	16.15
48A–1	240–1	76.200	47.63	47.35	23.81	103.0	72.39	9.50	–	510.3/115977	622.5	23.20
10A–2	50–2	15.875	10.16	9.40	5.08	41.2	15.09	2.03	18.11	44.4/10091	58.1	2.00
12A–2	60–2	19.050	11.91	12.57	5.94	51.1	18.00	2.42	22.78	63.6/14455	82.1	2.92
16A–2	80–2	25.400	15.88	15.75	7.92	65.8	24.00	3.25	29.29	113.4/25773	141.8	5.15
20A–2	100–2	31.750	19.05	18.90	9.53	80.5	30.00	4.00	35.76	177.0/40227	219.4	7.80
24A–2	120–2	38.100	22.23	25.22	11.10	99.7	35.70	4.80	45.44	254.0/57727	314.9	11.70
28A–2	140–2	44.450	25.40	25.22	12.70	107.9	41.00	5.60	48.87	344.8/78364	427.5	15.14
32A–2	160–2	50.800	28.58	31.55	14.27	128.1	47.80	6.40	58.55	453.6/103091	562.4	20.14
36A–2	180–2	57.150	35.71	35.48	17.46	144.4	53.60	7.20	65.84	560.5/127386	695.0	29.22
40A–2	200–2	63.500	39.68	37.85	19.85	158.8	60.00	8.00	71.55	707.6/160818	877.4	32.24
48A–2	240–2	76.200	47.63	47.35	23.81	190.8	72.39	9.50	87.83	1020.6/231955	1255.3	45.23
10A–3	50–3	15.875	10.16	9.40	5.08	59.3	15.09	2.03	18.11	66.6/15136	77.8	3.09
12A–3	60–3	19.050	11.91	12.57	5.94	73.9	18.00	2.42	22.78	95.4/21682	111.1	4.54
16A–3	80–3	25.400	15.88	15.75	7.92	95.1	24.00	3.25	29.29	170.1/38659	198.4	7.89
20A–3	100–3	31.750	19.05	18.90	9.53	116.3	30.00	4.00	35.76	265.5/60341	309.6	11.77
24A–3	120–3	38.100	22.23	25.22	11.10	145.2	35.70	4.80	45.44	381.0/86591	437.2	17.53
28A–3	140–3	44.450	25.40	25.22	12.70	156.8	41.00	5.60	48.87	517.2/117545	593.3	22.20
32A–3	160–3	50.800	28.58	31.55	14.27	186.6	47.80	6.40	58.55	680.4/154636	780.6	30.02
36A–3	180–3	57.150	35.71	35.48	17.46	210.2	53.60	7.20	65.84	840.7/191068	983.6	38.22
40A–3	200–3	63.500	39.68	37.85	19.85	230.4	60.00	8.00	71.55	1061.4/241227	1217.8	49.03
48A–3	240–3	76.200	47.63	47.35	23.81	278.6	72.39	9.50	87.83	1530.9/347932	1756.5	71.60

Heavy duty series cottered type roller chains
Rollenketten mit Splinten, schwere Ausführung

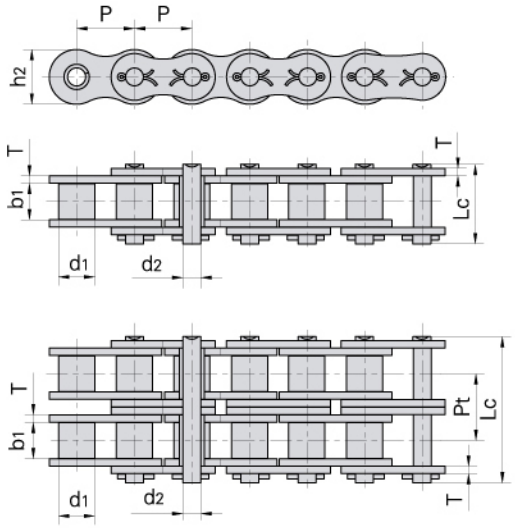

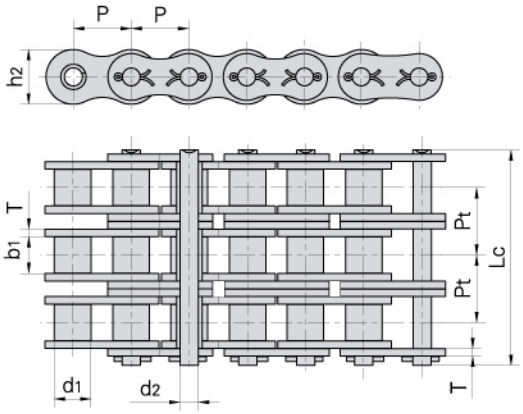

DIN/ISO Chain No.	ANSI Chain No.	Pitch	Roller diameter	Width between inner plates	Pin diameter	Pin length	Inner plate depth	Plate thickness	Transverse pitch	Ultimate tensile strength	Average tensile strength	Weight per meter
DIN/ISO Ketten Nr.	*ANSI Ketten Nr.*	*Teilung*	*Rollen-durch-messer*	*Innere Breite*	*Bolzen-durch-messer*	*Bolzen-länge*	*Innen-laschen-höhe*	*Laschen-dicke*	*Mitten-abstand*	*Min. Bruchkraft*	*Durchschn. Bruchkraft*	*Gewicht*
		P	d_1 max	b_1 min	d_2 max	Lc max	h_2 max	T max	Pt	Q min	Q_0	q
		mm	mm	mm	mm	mm	mm	mm	mm	kN/LB	kN	kg/m
10AH–1	50H–1	15.875	10.16	9.40	5.08	24.4	15.09	2.42	–	22.2/5045	30.2	1.25
12AH–1	60H–1	19.050	11.91	12.57	5.94	31.6	18.00	3.25	–	31.8/7227	42.7	1.87
16AH–1	80H–1	25.400	15.88	15.75	7.92	39.4	24.00	4.00	–	56.7/12886	71.4	3.10
20AH–1	100H–1	31.750	19.05	18.90	9.53	46.9	30.00	4.80	–	88.5/20114	112.4	4.52
24AH–1	120H–1	38.100	22.23	25.22	11.10	57.5	35.70	5.60	–	127.0/28864	160.9	6.60
28AH–1	140H–1	44.450	25.40	25.22	12.70	62.2	41.00	6.40	–	172.4/39182	217.3	8.30
32AH–1	160H–1	50.800	28.58	31.55	14.27	73.0	47.80	7.20	–	226.8/51545	285.8	10.30
40AH–1	200H–1	63.500	39.68	37.85	19.85	93.5	60.00	9.50	–	353.8/80409	444.5	19.16
12AH–2	60H–2	19.050	11.91	12.57	5.94	57.7	18.00	3.25	26.11	63.6/14454	84.5	3.71
16AH–2	80H–2	25.400	15.88	15.75	7.92	72.0	24.00	4.00	32.59	113.4/25773	145.3	6.15
20AH–2	100H–2	31.750	19.05	18.90	9.53	86.0	30.00	4.80	39.09	177.0/40227	225.9	9.03
24AH–2	120H–2	38.100	22.23	25.22	11.10	106.4	35.70	5.60	48.87	254.0/57727	322.7	13.13
28AH–2	140H–2	44.450	25.40	25.22	12.70	114.4	41.00	6.40	52.20	344.8/78364	437.7	16.60
32AH–2	160H–2	50.800	28.58	31.55	14.27	134.9	47.80	7.20	61.90	453.6/103091	571.6	20.20
40AH–2	200H–2	63.500	39.68	37.85	19.85	171.8	60.00	9.50	78.31	707.6/160818	894.9	38.11
12AH–3	60H–3	19.050	11.91	12.57	5.94	83.8	18.00	3.25	26.11	95.4/21682	113.9	5.54
16AH–3	80H–3	25.400	15.88	15.75	7.92	104.6	24.00	4.00	32.59	170.1/38659	203.5	9.42
20AH–3	100H–3	31.750	19.05	18.90	9.53	125.1	30.00	4.80	39.09	265.5/60341	314.8	12.96
24AH–3	120H–3	38.100	22.23	25.22	11.10	155.2	35.70	5.60	48.87	381.0/86591	444.7	19.64
28AH–3	140H–3	44.450	25.40	25.22	12.70	166.6	41.00	6.40	52.20	517.2/117545	598.4	24.90
32AH–3	160H–3	50.800	28.58	31.55	14.27	196.8	47.80	7.20	61.90	680.4/154636	787.3	30.10
40AH–3	200H–3	63.500	39.68	37.85	19.85	250.1	60.00	9.50	78.31	1061.4/241227	1228.2	57.06

Other roller chains
Andere Rollenketten

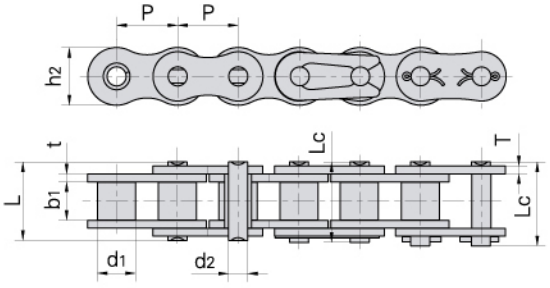

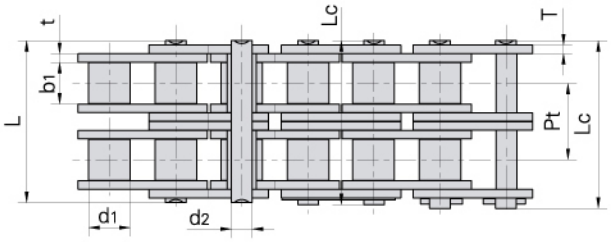

Donghua Chain No. *Donghua Ketten Nr.*	Pitch *Teilung* P	Roller diameter *Rollen-durch-messer* d1 max	Width between inner plates *Innere Breite* b1 min	Pin diameter *Bolzen-durch-messer* d2 max	Pin length *Bolzen-länge* L max	Pin length *Bolzen-länge* Lc max	Inner plate depth *Innen-laschen-höhe* h2 max	Plate thickness *Laschen-dicke* t/T max	Transverse pitch *Mitten-abstand* Pt	Ultimate tensile strength *Min. Bruchkraft* Q min	Average tensile strength *Durchschn. BruchKraft* Q0	Weight per meter *Gewicht* q
	mm	mm	mm	mm	mm	mm	mm	mm	mm	kN/LB	kN	kg/m
A06B–2	9.525	6.35	5.72	3.28	23.4	24.40	8.20	1.30	10.24	16.90/3841	18.7	0.75
06BF30–2	9.525	6.35	5.40	3.28	23.7	23.70	9.60	1.60	10.24	16.5/3748	18.15	1.05
415	12.700	7.77	4.76	3.60	11.0	12.40	9.70	1.00	–	6.86/1559	7.6	0.32
415H	12.700	7.77	4.76	3.96	13.1	14.50	12.00	1.50	–	14.40/3273	16.1	0.55
415B	12.700	7.75	4.88	4.09	12.9	14.40	10.30	1.30	–	12.00/2727	14.2	0.45
415BF1	12.700	7.75	4.88	4.09	11.5	13.00	10.30	1.00	–	9.00/2045	10.6	0.38
415BF3	12.700	7.75	4.80	4.09	11.6	13.65	10.30	1.20	–	9.80/2227	10.7	0.43
415BF5	12.700	7.75	5.10	4.09	14.4	16.00	9.90	1.8/1.6	–	16.00/3600	16.5	0.46
415BF7	12.700	7.75	4.88	3.58	13.8	15.00	10.30	1.30	–	6.00/1363	10.7	0.40
423	12.700	8.51	6.40	4.45	15.6	17.10	12.40	1.70	–	19.60/4455	21.9	0.71
478	12.700	7.80	4.80	4.00	11.6	13.65	10.46	1.25	–	9.80/2227	12.8	0.39
170GSX	12.700	7.75	6.45	3.96	14.8	16.40	11.50	1.6/1.4	–	17.15/3860	18.5	0.62
205	12.700	8.51	6.40	4.45	15.2	16.30	11.80	1.6/1.3	–	18.00/4049	19.0	0.85
08BF	12.700	8.51	5.55	4.45	14.6	16.10	11.80	1.60	–	17.80/4045	19.2	0.66
10AF13	15.875	10.16	16.31	5.08	27.6	29.10	15.09	2.03	–	21.8/4952	23.9	1.35
10AF50	15.875	14.20	19.40	5.08	30.9	32.60	13.00	2.03	–	16.4/3726	18.0	2.14
12BF14	19.050	12.07	30.56	5.72	42.0	43.60	16.00	1.85	–	29.00/6591	32.2	2.13
515	19.050	12.07	13.50	5.72	28.6	31.30	16.20	3.00	–	30.0/6748	33.0	1.83
12BF58	19.050	12.70	31.40	5.72	43.5	46.20	16.00	2.03	–	29.00/6591	32.2	2.36
14BF1	22.225	14.30	14.60	9.00	36.3	38.00	23.50	4.8/4.0	–	75.0/16871	82.5	3.59
16BF1	25.400	15.88	12.20	8.28	31.4	32.70	21.00	4.15/3.1	–	60.00/13636	71.4	2.51
16BF2	25.400	15.88	17.02	8.28	38.6	39.80	21.00	4.15	–	60.00/13636	71.4	3.08
16BF5	25.400	15.88	12.70	8.28	30.8	32.10	20.00	3.5/3.0	–	50.00/11364	57.5	2.37
16AF52	25.400	15.88	78.00	7.92	95.6	99.10	24.00	3.25	–	56.7/12882	62.0	6.46
16AF62	25.400	15.88	47.00	7.92	64.3	67.80	24.00	3.25	–	56.7/12882	62.0	4.29
16AF93	25.400	15.88	12.70	7.92	25.0	28.50	20.50	2.03	–	28.0/63616	30.8	1.74
20AFT–2	31.750	19.05	18.90	9.53	76.4	80.50	30.10	4.00	35.76	211.68/48093	232.0	8.09
20AF22	31.750	19.05	18.90	9.53	44.7	44.70	30.00	4.00	–	50/11360	55.0	3.97
20BF14	31.750	19.05	19.56	10.19	45.6	49.30	26.40	5.6/4.5	–	105/23856	115.5	4.57
24BHF5	38.100	25.40	25.40	14.63	64.6	69.10	36.20	9/7.5	–	270/61344	297.0	10.60
28AF1–2	44.450	25.40	25.22	12.70	103.3	112.20	41.00	5.60	48.87	338.1/76816	371.9	15.06
32AF2	50.800	32.00	31.75	17.00	64.8	69.60	48.00	6.40	–	200.00/45454	222.5	11.61
32AT	50.800	28.58	15.88	14.27	36.2	40.80	47.80	3.25	–	111.2 0 /25272	123.6	5.21

Corrosion resistant / Zinc-plated chains
Korrosionsbeständige Ketten, verzinkt

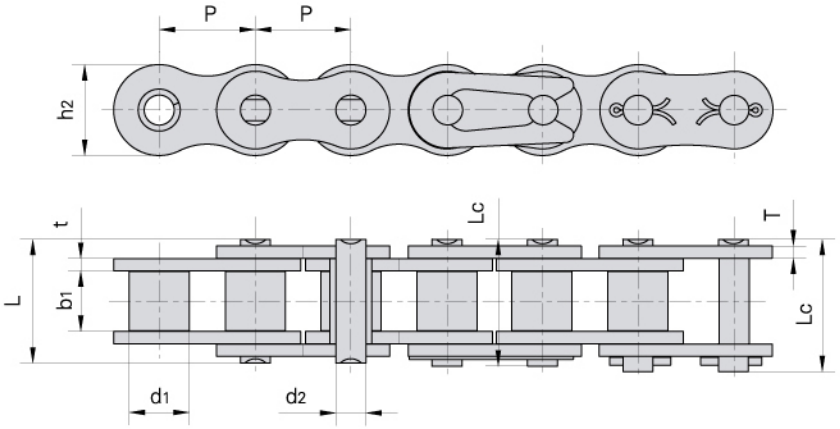

Donghua Chain No.	Pitch *Teilung*	Roller diameter *Rollen-durch-messer*	Width between inner plates *Innere Breite*	Pin diameter *Bolzen-durch-messer*	Pin length *Bolzen-länge*		Inner plate depth *Innen-laschen-höhe*	Plate thickness *Laschen-dicke*	Breaking load *Bruchkraft*	Weight per meter *Gewicht*
Donghua Ketten Nr.	P	d_1 max	b_1 min	d_2 max	L max	Lc max	h_2 max	t/T max	Q	q
	mm	mm	mm	mm	mm	mm	mm	mm	kN/LB	kg/m
*25ZP	6.350	3.30	3.18	2.31	7.90	8.40	6.00	0.80	3.50/795	0.15
*35ZP	9.525	5.08	4.77	3.58	12.40	13.17	9.00	1.30	7.90/1795	0.33
41ZP	12.700	7.77	6.25	3.58	13.75	15.00	9.91	1.30	6.67/1516	0.41
40ZP	12.700	7.95	7.85	3.96	16.60	17.80	12.00	1.50	14.10/3205	0.62
50ZP	15.875	10.16	9.40	5.08	20.70	22.20	15.09	2.03	22.20/5045	1.02
60ZP	19.050	11.91	12.57	5.94	25.90	27.70	18.00	2.42	31.80/7227	1.50
80ZP	25.400	15.88	15.75	7.92	32.70	35.00	24.00	3.25	56.70/12886	2.60
100ZP	31.750	19.05	18.90	9.53	40.40	44.70	30.00	4.00	88.50/20114	3.91
120ZP	38.100	22.23	25.22	11.10	50.30	54.30	35.70	4.80	127.00/28864	5.62
140ZP	44.450	25.40	25.22	12.70	54.40	59.00	41.00	5.60	172.40/39182	7.50
160ZP	50.800	28.58	31.55	14.27	64.80	69.60	47.80	6.40	226.80/51545	10.10
04BZP	6.000	4.00	2.80	1.85	6.80	7.80	5.00	0.60	3.00/682	0.11
05BZP	8.000	5.00	3.00	2.31	8.20	8.90	7.10	0.80	5.00/1136	0.20
#06BZP	9.525	6.35	5.72	3.28	13.15	14.10	8.20	1.30	9.00/2045	0.41
08BZP	12.700	8.51	7.75	4.45	16.70	18.20	11.80	1.60	18.00/4091	0.69
10BZP	15.875	10.16	9.65	5.08	19.50	20.90	14.70	1.70	22.40/5091	0.93
12BZP	19.050	12.07	11.68	5.72	22.50	24.20	16.00	1.85	29.00/6591	1.15
16BZP	25.400	15.88	17.02	8.28	36.10	37.40	21.00	4.15/3.1	60.00/13636	2.71
20BZP	31.750	19.05	19.56	10.19	41.30	45.00	26.40	4.5/3.5	95.00/21591	3.70
24BZP	38.100	25.40	25.40	14.63	53.40	57.80	33.20	6.0/4.8	160.0/36364	7.10
28BZP	44.450	27.94	30.99	15.90	65.10	69.50	36.70	7.5/6.0	200.0/45455	8.50
32BZP	50.800	29.21	30.99	17.81	66.00	71.00	42.00	7.0/6.0	250.0/56818	10.25

*Bushing chain: d1 in the table indicate the external diameter of the bushing.
**Buchsenketten: In dieser Tabelle zeigt d1 den Außendurchmesser der Buchsen.*

#Straight side plates
#Gerade Laschen

Note:Duplex & Triplex zinc plated chains are available in all sizes
Double pitch zinc plated conveyor chains are available upon request
Hinweis: Alle Zweifach- und langgliedrige Förderketten von der obengenannten Spezifikation können nach Kundenwunsch auch verzinkt werden.

Corrosion resistant / Nickel-plated chains
Korrosionsbeständige Ketten, vernickelt

Nickel-plated chains are suitable for outdoor conditions such as exposure to rain
Die vernickelten Ketten sind geeignet für die Anwendung in der korrosiven Umgebung, z.B. im Regen.

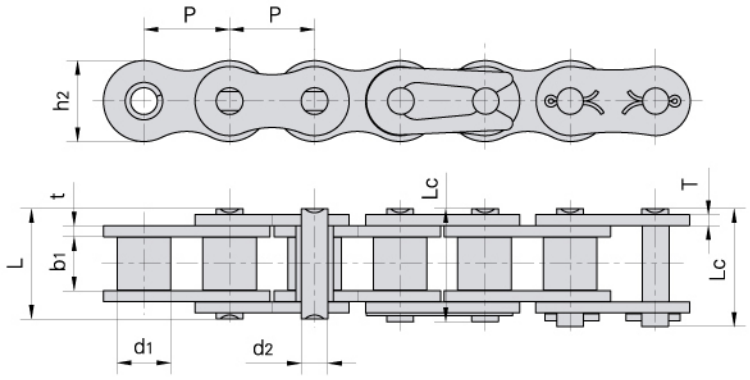

Donghua Chain No.	Pitch *Teilung*	Roller diameter *Rollen-durch-messer*	Width between inner plates *Innere Breite*	Pin diameter *Bolzen-durch-messer*	Pin length *Bolzen-länge*		Inner plate depth *Innen-laschen-höhe*	Plate thickness *Laschen-dicke*	Breaking load *Bruchkraft*	Weight per meter *Gewicht*
Donghua Ketten Nr.	P	d_1 max	b_1 min	d_2 max	L max	Lc max	h_2 max	t/T max	Q	q
	mm	mm	mm	mm	mm	mm	mm	mm	kN/LB	kg/m
*25NP	6.350	3.30	3.18	2.31	7.90	8.40	6.00	0.80	3.50/795	0.15
*35NP	9.525	5.08	4.77	3.58	12.40	13.17	9.00	1.30	7.90/1795	0.33
41NP	12.700	7.77	6.25	3.58	13.75	15.00	9.91	1.30	6.67/1516	0.41
40NP	12.700	7.95	7.85	3.96	16.60	17.80	12.00	1.50	14.10/3205	0.62
50NP	15.875	10.16	9.40	5.08	20.70	22.20	15.09	2.03	22.20/5045	1.02
60NP	19.050	11.91	12.57	5.94	25.90	27.70	18.00	2.42	31.80/7227	1.50
80NP	25.400	15.88	15.75	7.92	32.70	35.00	24.00	3.25	56.70/12886	2.60
100NP	31.750	19.05	18.90	9.53	40.40	44.70	30.00	4.00	88.50/20114	3.91
120NP	38.100	22.23	25.22	11.10	50.30	54.30	35.70	4.80	127.00/28864	5.62
140NP	44.450	25.40	25.22	12.70	54.40	59.00	41.00	5.60	172.40/39182	7.50
160NP	50.800	28.58	31.55	14.27	64.80	69.60	47.80	6.40	226.80/51545	10.10
04BNP	6.000	4.00	2.80	1.85	6.80	7.80	5.00	0.60	3.00/682	0.11
05BNP	8.000	5.00	3.00	2.31	8.20	8.90	7.10	0.80	5.00/1136	0.20
#06BNP	9.525	6.35	5.72	3.28	13.15	14.10	8.20	1.30	9.00/2045	0.41
08BNP	12.700	8.51	7.75	4.45	16.70	18.20	11.80	1.60	18.00/4091	0.69
10BNP	15.875	10.16	9.65	5.08	19.50	20.90	14.70	1.70	22.40/5091	0.93
12BNP	19.050	12.07	11.68	5.72	22.50	24.20	16.00	1.85	29.00/6591	1.15
16BNP	25.400	15.88	17.02	8.28	36.10	37.40	21.00	4.15/3.1	60.00/13636	2.71
20BNP	31.750	19.05	19.56	10.19	41.30	45.00	26.40	4.5/3.5	95.00/21591	3.70
24BNP	38.100	25.40	25.40	14.63	53.40	57.80	33.20	6.0/4.8	160.0/36364	7.10
28BNP	44.450	27.94	30.99	15.90	65.10	69.50	36.70	7.5/6.0	200.00/45455	8.50
32BNP	50.800	29.21	30.99	17.81	66.00	71.00	42.00	7.0/6.0	250.00/56818	10.25

*Bushing chain: d1 in the table indicate the external diameter of the bushing.
**Buchsenketten: In dieser Tabelle zeigt d1 den Außendurchmesser der Buchsen.*

#Straight side plates
#Gerade Laschen

Note:Duplex & Triplex nickel plated chains are available in all sizes
Double pitch zinc plated conveyor chains are available upon request
Hinweis: Alle Zweifach- und langgliedrige Förderketten von der obengenannten Spezifikation können nach Kundenwunsch auch vernickelt werden.

CORROSION RESISTANT / DACROMET PLATED CHAINS

KORROSIONSGESCHÜTZTE HOCHLEISTUNGS-ROLLENKETTEN, DACROMET BESCHICHTET



Standard Roller Chain *Standard-Rollenkette*



Dacromet-plated Chain *Dacromet beschichtete Kette*

Surface conditions after corrosion test
Die Oberflächenqualität nach dem Korrosionstest



Corrosion resistant / Dacromet-plated chains
Korrosionsgeschützte Hochleistungsrollenketten, Dacromet beschichtet

Dacromet-plated chains are suitable for corrosive conditions
Die Dacromet beschichteten Ketten sind geeignet für die Anwendung in der korrosiven Umgebung.

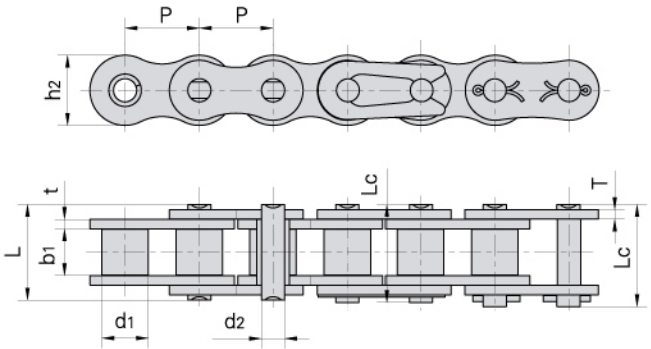

Donghua Chain No. *Donghua Ketten Nr.*	Pitch *Teilung*	Roller diameter *Rollen-durch-messer*	Width between inner plates *Innere Breite*	Pin diameter *Bolzen-durch-messer*	Pin length *Bolzen-länge*		Inner plate depth *Innen-laschen-höhe*	Plate thickness *Laschen-dicke*	Breaking load *Bruchkraft*	Weight per meter *Gewicht*
	P	d_1 max	b_1 min	d_2 max	L max	Lc max	h_2 max	t/T max	Q	q
	mm	mm	mm	mm	mm	mm	mm	mm	kN/LB	kg/m
*25DR	6.350	3.30	3.18	2.31	7.90	8.40	6.00	0.80	3.50/795	0.15
*35DR	9.525	5.08	4.77	3.58	12.40	13.17	9.00	1.30	7.90/1795	0.33
41DR	12.700	7.77	6.25	3.58	13.75	15.00	9.91	1.30	6.67/1516	0.41
40DR	12.700	7.95	7.85	3.96	16.60	17.80	12.00	1.50	14.10/3205	0.62
50DR	15.875	10.16	9.40	5.08	20.70	22.20	15.09	2.03	22.20/5045	1.02
60DR	19.050	11.91	12.57	5.94	25.90	27.70	18.00	2.42	31.80/7227	1.50
80DR	25.400	15.88	15.75	7.92	32.70	35.00	24.00	3.25	56.70/12886	2.60
100DR	31.750	19.05	18.90	9.53	40.40	44.70	30.00	4.00	88.50/20114	3.91
120DR	38.100	22.23	25.22	11.10	50.30	54.30	35.70	4.80	127.00/28864	5.62
140DR	44.450	25.40	25.22	12.70	54.40	59.00	41.00	5.60	172.40/39182	7.50
160DR	50.800	28.58	31.55	14.27	64.80	69.60	47.80	6.40	226.80/51545	10.10
04BDR	6.000	4.00	2.80	1.85	6.80	7.80	5.00	0.60	3.00/682	0.11
05BDR	8.000	5.00	3.00	2.31	8.20	8.90	7.10	0.80	5.00/1136	0.20
#06BDR	9.525	6.35	5.72	3.28	13.15	14.10	8.20	1.30	9.00/2045	0.41
08BDR	12.700	8.51	7.75	4.45	16.70	18.20	11.80	1.60	18.00/4091	0.69
10BDR	15.875	10.16	9.65	5.08	19.50	20.90	14.70	1.70	22.40/5091	0.93
12BDR	19.050	12.07	11.68	5.72	22.50	24.20	16.00	1.85	29.00/6591	1.15
16BDR	25.400	15.88	17.02	8.28	36.10	37.40	21.00	4.15/3.1	60.00/13636	2.71
20BDR	31.750	19.05	19.56	10.19	41.30	45.00	26.40	4.5/3.5	95.00/21591	3.70
24BDR	38.100	25.40	25.40	14.63	53.40	57.80	33.20	6.0/4.8	160.00/36364	7.10
28BDR	44.450	27.94	30.99	15.90	65.10	69.50	36.70	7.5/6.0	200.00/45455	8.50
32BDR	50.800	29.21	30.99	17.81	66.00	71.00	42.00	7.0/6.0	250.00/56818	10.25

*Bushing chain: d1 in the table indicate the external diameter of the bushing.
**Buchsenketten: In dieser Tabelle zeigt d1 den Außendurchmesser der Buchsen.*

#Straight side plates
#Gerade Laschen

Note:Duplex & Triplex dacromet -- plated chains are available in all sizes.
Double pitch dacromet -- plated conveyor chains are available upon request.
Hinweis: Alle Zweifach- und langgliedrige Förderketten von der obengenannten Spezifikation können nach Kundenwunsch auch Dacromet beschichtet werden.

OIL FIELD CHAINS
ÖLFELDKETTEN



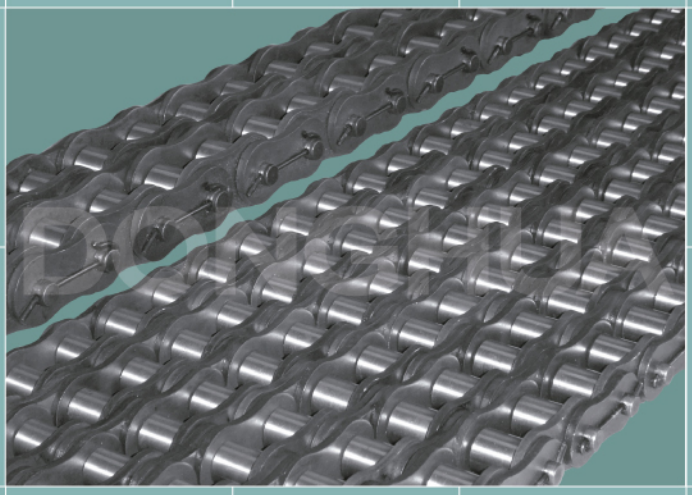

Oil field chains
Ölfeldketten

API CERTIFIED
API ZERTIFIZIERT

Simplex, Duplex & Triplex strands
Einfach, Zweifach & Dreifach

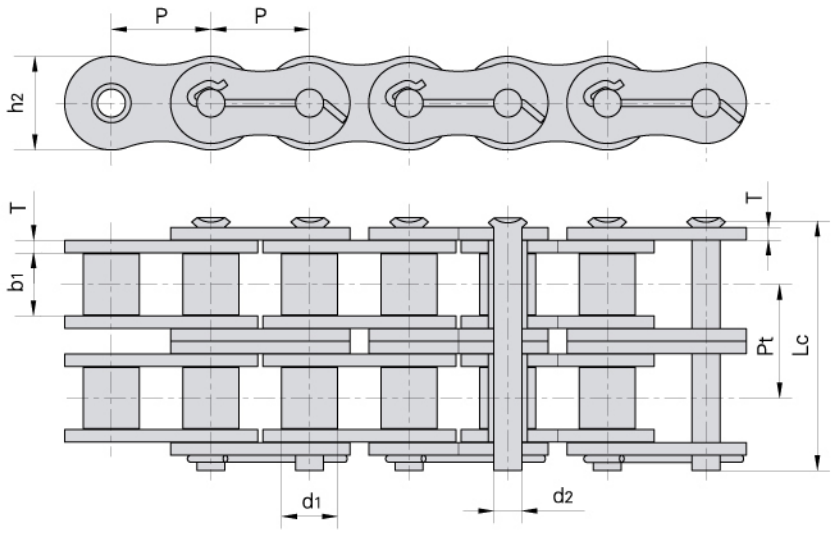

ANSI Chain No. *ANSI Ketten Nr.*	Donghua Chain No. *Donghua Ketten Nr.*	Pitch *Teilung* P		Roller diameter *Rollen-durch-messer* d_1 max	Width between inner plates *Innere Breite* b_1 min	Pin diameter *Bolzen-durch-messer* d_2 max	Pin length *Bolzen-länge* Lc max	Inner plate depth *Innen-laschen-höhe* h_2 max	Plate thickness *Laschen-dicke* T max	Transverse pitch *Mitten-abstand* Pt	Ultimate tensile strength *Min. Bruchkraft* Q min	Weight per meter *Gewicht* q
		mm	inch	mm	mm	mm	mm	mm	mm	mm	kN/LB	kg/m
80	16S–1	25.40	1	15.88	15.75	7.92	37.55	24.1	3.25	–	55.6/12500	2.60
100	20S–1	31.75	1 1/4	19.05	18.90	9.53	44.30	30.0	4.00	–	86.87/19500	3.91
120	24S–1	38.10	1 1/2	22.23	25.22	11.10	54.40	36.2	4.80	–	125.1/28100	5.62
140	28S–1	44.45	1 3/4	25.40	25.22	12.70	59.00	42.2	5.60	–	170.27/38300	7.50
160	32S–1	50.80	2	28.58	31.55	14.27	69.60	48.2	6.40	–	222.4/50000	10.10
180	36S–1	57.15	2 1/4	35.71	35.48	17.46	78.60	54.3	7.20	–	281.47/63300	13.45
200	40S–1	63.50	2 1/2	39.68	37.85	19.85	87.20	60.3	8.00	–	347.5/78100	16.15
80–2	16S–2	25.40	1	15.88	15.75	7.92	66.80	24.1	3.25	29.29	111.2/25000	5.15
100–2	20S–2	31.75	1 1/4	19.05	18.90	9.53	80.50	30.1	4.00	35.76	173.74/39000	7.80
120–2	24S–2	38.10	1 1/2	22.23	25.22	11.10	99.70	36.2	4.80	45.44	250.2/56200	11.70
140–2	28S–2	44.45	1 3/4	25.40	25.22	12.70	107.80	42.2	5.60	48.87	340.54/76600	15.14
160–2	32S–2	50.80	2	28.58	31.55	14.27	127.50	48.2	6.40	58.55	444.8/100000	20.14
180–2	36S–2	57.15	2 1/4	35.71	35.48	17.46	144.40	54.3	7.20	65.84	562.94/126600	29.22
200–2	40S–2	63.50	2 1/2	39.68	37.85	19.85	158.80	60.3	8.00	71.55	695.0/156200	32.24
80–3	16S–3	25.40	1	15.88	15.75	7.92	96.10	24.1	3.25	29.29	166.8/37500	7.89
100–3	20S–3	31.75	1 1/4	19.05	18.90	9.53	116.30	30.1	4.00	35.76	260.61/58500	11.77
120–3	24S–3	38.10	1 1/2	22.23	25.22	11.10	145.20	36.2	4.80	45.44	375.3/84300	17.53
140–3	28S–3	44.45	1 3/4	25.40	25.22	12.70	156.80	42.2	5.60	48.87	510.81/114900	22.20
160–3	32S–3	50.80	2	28.58	31.55	14.27	186.60	48.2	6.40	58.55	667.2/15000	30.02
180–3	36S–3	57.15	2 1/4	35.71	35.48	17.46	210.20	54.3	7.20	65.84	844.41/189900	38.22
200–3	40S–3	63.50	2 1/2	39.68	37.85	19.85	230.40	60.3	8.00	71.55	1042.5/234300	49.03
200H–3	40HS–3	63.50	2 1/2	39.68	37.85	19.85	249.60	60.3	9.50	78.31	1042.5/234300	56.74

Oil field chains
Ölfeldketten

API CERTIFIED
API ZERTIFIZIERT

Multiple strands
Mehrfach

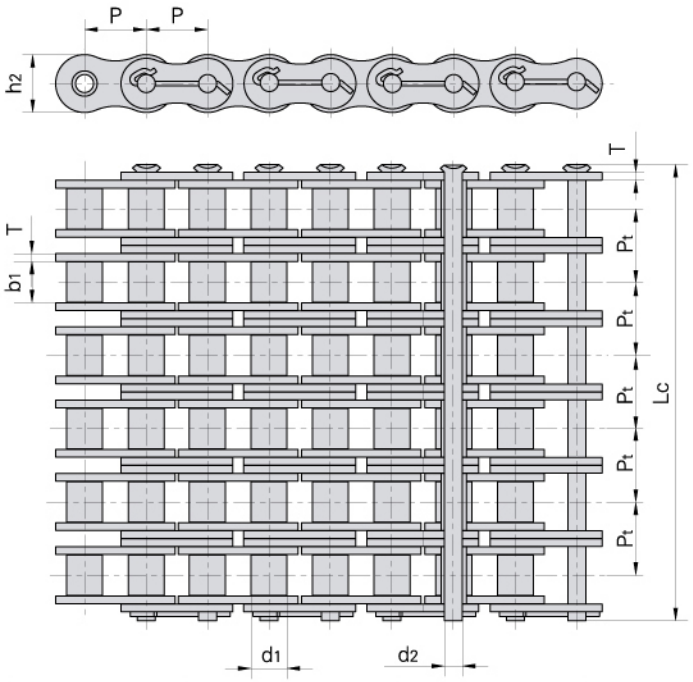



ANSI Chain No. *ANSI Ketten Nr.*	Donghua Chain No. *Donghua Ketten Nr.*	Pitch *Teilung* P		Roller diameter *Rollen-durch-messer* d1 max	Width between inner plates *Innere Breite* b1 min	Pin diameter *Bolzen-durch-messer* d2 max	Pin length *Bolzen-länge* Lc max	Inner plate depth *Innen-laschen-höhe* h2 max	Plate thickness *Laschen-dicke* T max	Transverse pitch *Mitten-abstand* Pt	Ultimate tensile strength *Min. Bruchkraft* Q min	Weight per meter *Gewicht* q
		mm	inch	mm	mm	mm	mm	mm	mm	mm	kN/LB	kg/m
80–4	16S–4	25.400	1	15.88	15.75	7.92	122.9	24.1	3.25	29.29	222.4/50000	10.24
100–4	20S–4	31.750	1 1/4	19.05	18.90	9.53	151.5	30.1	4.00	35.76	347.48/78000	15.39
120–4	24S–4	38.100	1 1/2	22.23	25.22	11.10	190.6	36.2	4.80	45.44	500.4/112400	22.19
140–4	28S–4	44.450	1 3/4	25.40	25.22	12.70	205.7	42.2	5.60	48.87	681.08/153200	29.63
160–4	32S–4	50.800	2	28.58	31.55	14.27	245.2	48.2	6.40	58.55	889.6/200000	39.94
200–4	40S–4	63.500	2 1/2	39.68	37.85	19.85	302.0	60.3	8.00	71.55	1390.0/312400	63.60
80–5	16S–5	25.400	1	15.88	15.75	7.92	152.2	24.1	3.25	29.29	278.0/62500	12.79
100–5	20S–5	31.750	1 1/4	19.05	18.90	9.53	187.8	30.1	4.00	35.76	434.35/97500	19.22
120–5	24S–5	38.100	1 1/2	22.23	25.22	11.10	236.1	36.2	4.80	45.44	625.5/140500	27.71
140–5	28S–5	44.450	1 3/4	25.40	25.22	12.70	254.6	42.2	5.60	48.87	851.35/193486	39.20
160–5	32S–5	50.800	2	28.58	31.75	14.27	303.3	48.2	6.40	58.55	1112.0/252724	52.40
80–6	16S–6	25.400	1	15.88	15.75	7.92	181.5	24.1	3.25	29.29	333.6/75000	15.34
100–6	20S–6	31.750	1 1/4	19.05	18.90	9.53	223.6	30.1	4.00	35.76	521.22/117000	23.05
120–6	24S–6	38.100	1 1/2	22.23	25.22	11.10	281.6	36.2	4.80	45.44	750.6/168600	33.24
140–6	28S–6	44.450	1 3/4	25.40	25.22	12.70	303.4	42.2	5.60	48.87	1021.62/229800	44.38
160–6	32S–6	50.800	2	28.58	31.55	14.27	362.3	48.2	6.40	58.55	1334.4/300000	59.83
200–6	40S–6	63.500	2 1/2	39.68	37.85	19.85	445.0	60.3	8.00	71.55	2085.0/468600	95.23
80–8	16S–8	25.400	1	15.88	15.75	7.92	240.1	24.1	3.25	29.29	444.8/100000	20.44
100–8	20S–8	31.750	1 1/4	19.05	18.90	9.53	295.1	30.1	4.00	35.76	694.96/156000	30.71
120–8	24S–8	38.100	1 1/2	22.23	25.22	11.10	372.4	36.2	4.80	45.44	1000.8/224800	44.28
140–8	28S–8	44.450	1 3/4	25.40	25.22	12.70	401.1	42.2	5.60	48.87	1362.16/309578	62.21

Anti-sidebow chains for pushing window
Rückensteife Ketten für Fensteröffner

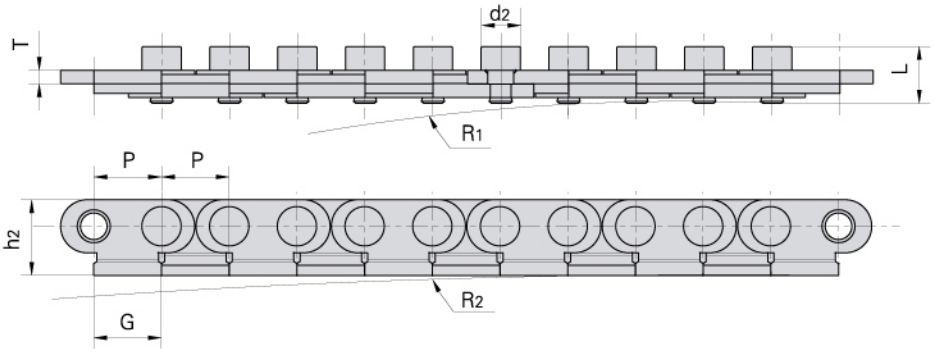

Donghua Chain No. *Donghua Ketten Nr.*	Pitch *Teilung*	Pin diameter *Bolzen-durch-messer*	Pin length *Bolzen-länge*	Plate dimension *Laschen-abmessungen*			Side bow radius *Seitenbogen-radius*		Weight per meter *Gewicht*
	P	d_2 max	L	h_2 max	G max	T max	R_1	R_2	q
	mm	mm	mm	mm	mm	mm	mm	mm	kg/m
P12.75SB	12.75	7.4	10.65	14.25	12.8	2.5	500~800	1000	0.69

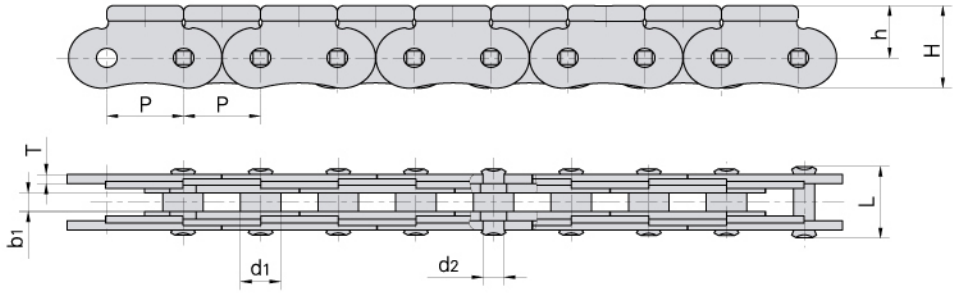

Donghua Chain No. *Donghua Ketten Nr.*	Pitch *Teilung*	Roller diameter *Rollen-durch-messer*	Width between inner plates *Innere Breite*	Pin diameter *Bolzen-durch-messer*	Pin length *Bolzen-länge*	Plate dimension *Laschen-abmessungen*			Ultimate tensile strength *Min. Bruchkraft*
	P	d_1 max	b_1	d_2 max	L max	H max	h	T	Q min
	mm	mm	mm	mm	mm	mm	mm	mm	kN
P11.5SS	11.5	6.00	3.00	3.00	10.8	13.5	8.5	1.5/1.5	5.5



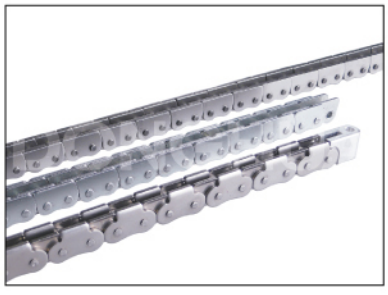

Anti-sidebow chains for pushing window
Rückensteife Ketten für Fensteröffner

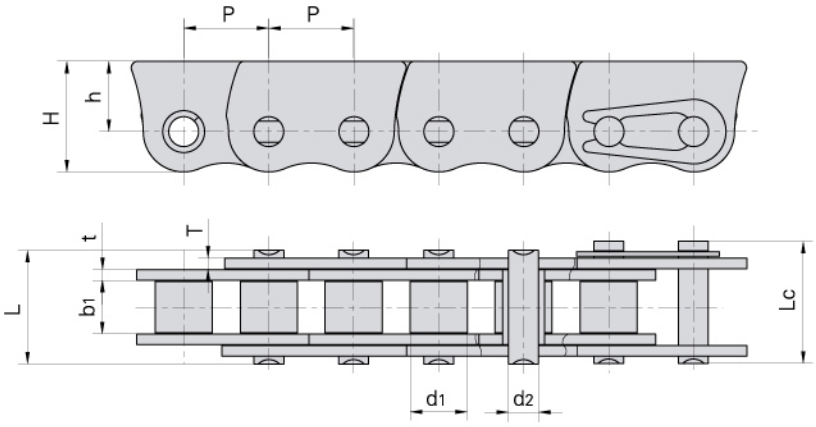

Donghua Chain No. *Donghua Ketten Nr.*	Pitch *Teilung*	Roller diameter *Rollen-durch-messer*	Width between inner plates *Innere Breite*	Pin diameter *Bolzen-durch-messer*	Pin length *Bolzen-länge*		Plate dimension *Laschen-abmessungen*			Ultimate tensile strength *Min. Bruchkraft*	Weight per meter *Gewicht*
	P	d_1 max	b_1 min	d_2 max	L max	Lc max	H max	h	t/T max	Q min	q
	mm	mm	mm	mm	mm	mm	mm	mm	mm	kN	kg/m
08AF6	12.7	7.95	7.85	3.96	16.6	17.8	17.0	11.0	1.5	13.8	0.91
415BF4	12.7	7.75	4.88	4.09	16.4	17.8	17.0	11.0	1.3/3.1	12.0	1.07
08BSSF20	12.7	8.51	7.75	4.45	16.7	18.2	16.5	10.5	1.6	12.0	1.06

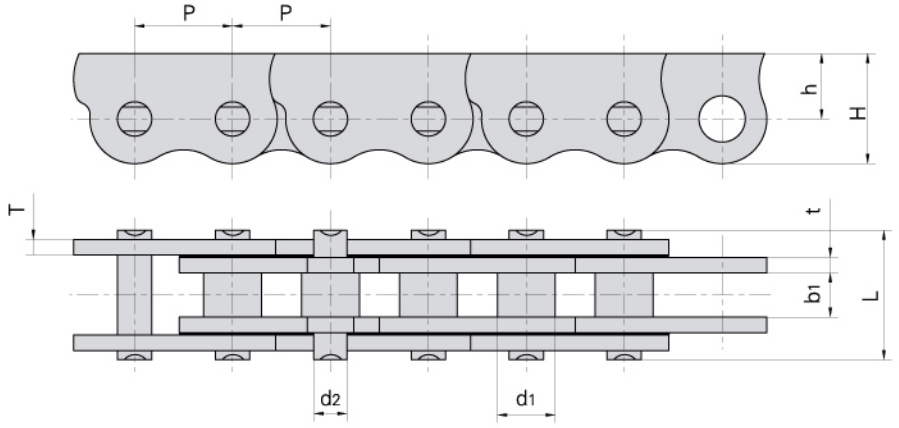

Donghua Chain No. *Donghua Ketten Nr.*	Pitch *Teilung*	Roller diameter *Rollen-durch-messer*	Width between inner plates *Innere Breite*	Pin diameter *Bolzen-durch-messer*	Pin length *Bolzen-länge*	Plate dimension *Laschen-abmessungen*			Ultimate tensile strength *Min. Bruchkraft*
	P	d_1 max	b_1	d_2 max	L max	H max	h	t/T	Q min
	mm	mm	mm	mm	mm	mm	mm	mm	kN
06CF31SS	9.525	6.35	4.5	3.58	11.5	12.38	7.88	1.3	5.2
P12.7F3SS	12.700	7.50	5.5	4.45	15.6	14.30	8.50	2.03	12.0

Side bow chains
Seitenbogenketten

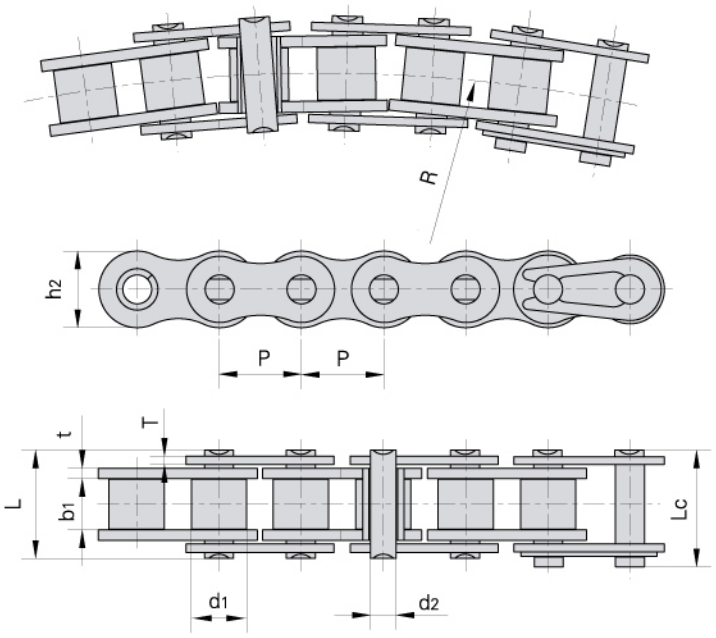

Donghua Chain No. *Donghua Ketten Nr.*	Pitch *Teilung*	Roller diameter *Rollen-durch-messer*	Width between inner plates *Innere Breite*	Pin diameter *Bolzen-durch-messer*	Pin length *Bolzen-länge*		Inner plate depth *Innen-laschen-höhe*	Plate thickness *Laschen-dicke*	Side bow radius *Seiten-bogen-radius*	Ultimate tensile strength *Min. Bruchkraft*	Average tensile strength *Durchschn. Bruchkraft*	Weight per meter *Gewicht*
	P	d_1 max	b_1 min	d_2 max	L max	Lc max	h_2 max	t/T max	R min	Q min	Q_0	q
	mm	mm	mm	mm	mm	mm	mm	mm	mm	kN/LB	kN	kg/m
40SB	12.700	7.95	7.85	3.96	16.9	18.1	11.7	1.50	350	13.8/3136	15.2	0.80
43SB	12.700	7.95	7.85	3.45	18.3	19.5	11.7	1.50	305	12.0/2727	13.2	0.64
50SB	15.875	10.16	9.40	4.37	20.7	22.7	14.9	2.03	400	20.6/4681	22.7	1.09
60SB	19.050	11.91	12.57	5.34	26.6	28.4	18.0	2.42	500	15.7/3568	17.3	1.54
63SB	19.050	11.91	12.68	5.08	28.8	30.6	17.2	2.42/2.03	350	12.5/2840	20.0	1.40
80SB	25.400	15.88	15.75	7.19	34.0	37.3	24.0	3.25	711	40.9/9201	42.0	2.60
06BSBF1	9.525	6.35	5.72	3.05	13.5	15.0	8.2	1.30	300	8.0/1818	8.8	0.60
08BSB	12.700	8.51	7.75	3.97	17.4	18.7	11.8	1.60	400	14.0/3182	15.4	0.70
08BSBF1	12.700	8.51	7.75	3.97	16.3	17.6	11.8	1.6/1.2	400	12.8/2909	14.1	0.65
10BSB	15.875	10.16	9.65	4.50	20.1	21.5	14.7	1.70	400	15.6/3545	17.2	0.93
12BSB	19.050	12.07	11.68	5.12	23.1	24.8	16.0	1.85	500	20.5/4658	22.6	1.16
16BSB	25.400	15.88	17.22	7.90	36.5	39.7	21.0	3.7/3.0	500	55.6/12635	64.0	2.53
C2050SB	31.750	10.16	9.40	5.08	21.3	22.6	15.0	2.03	800	21.8/4954	24.0	0.84
C2060SBF1	38.100	11.91	12.57	5.08	26.8	28.8	18.0	2.42	800	21.8/4954	24.0	1.17

Side bow chain with attachments
Anbauteile für Seitenbogenketten

Donghua Chain No. / *Donghua Ketten Nr.*	P	G	C	F	α
	mm	mm	mm	mm	
08BSBF5	12.7	24.0	9.9	16.0	60°

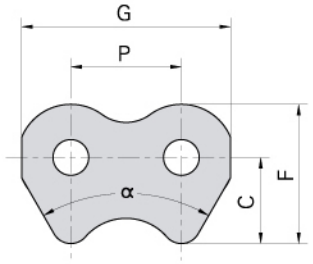

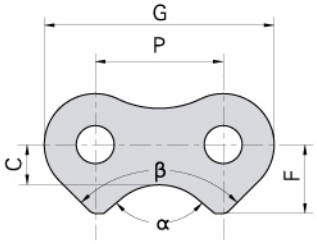

Donghua Chain No. / *Donghua Ketten Nr.*	P	G	C	F	α	β
	mm	mm	mm	mm		
50SBF2	15.875	28.0	5.0	8.56	100°	90°

Donghua Chain No. / *Donghua Ketten Nr.*	P	G	L	F	W	h_4	d_4
	mm	mm	mm	mm	mm	mm	mm
40SBF1	12.7	17.8	9.5	30.2	45.5	7.5	3.3

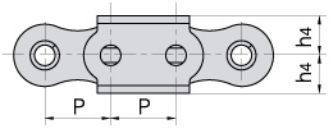

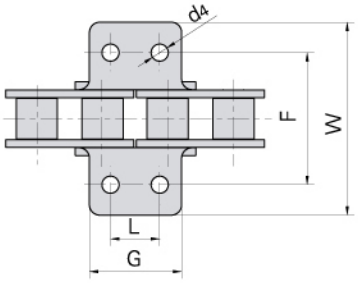

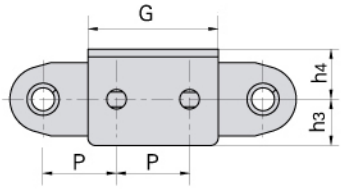

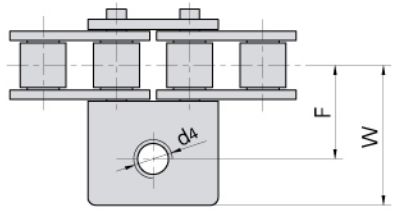

Donghua Chain No. / *Donghua Ketten Nr.*	P	G	F	W	h_3	h_4	d_4
	mm	mm	mm	mm	mm	mm	mm
63SBF2	19.05	33.9	24.4	36.4	12.0	13.0	M8

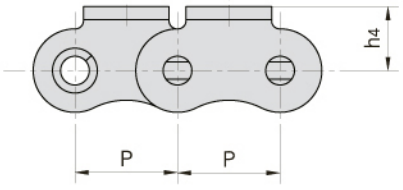

Donghua Chain No. / *Donghua Ketten Nr.*	P	G	F	W	T	h_4	d_4
	mm	mm	mm	mm	mm	mm	mm
50SBA1	15.875	12.70	31.75	46.2	2.03	10.3	5.5
60SBK1	19.050	15.90	38.10	56.3	2.42	11.9	5.5
10BA1F3SB	15.875	13.00	32.40	51.2	1.70	10.5	6.0
10BA1F5SB	15.875	14.29	31.80	46.2	1.70	10.3	6.0
C2050SBK1	31.750	23.80	31.80	44.6	2.03	11.1	5.5

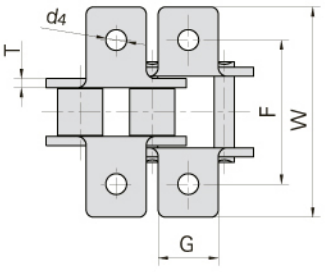

Heavy duty cranked-link transmission chains
Rotaryketten

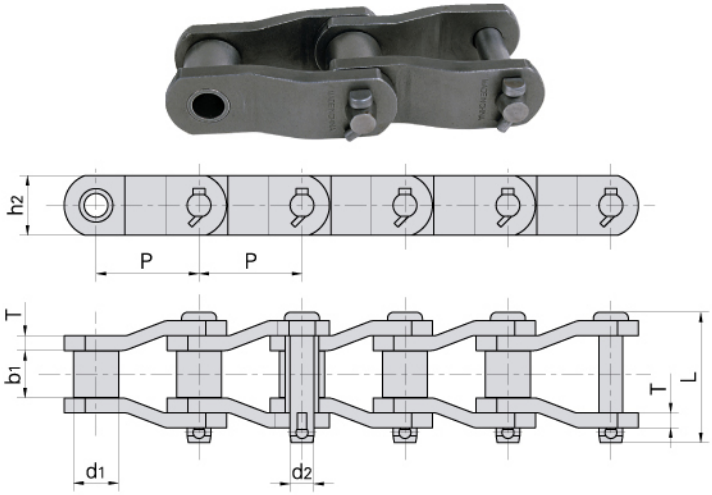

Donghua Chain No. *Donghua Ketten Nr.*	Pitch *Teilung*	Roller diameter *Rollen-durch-messer*	Width between inner plates *Innere Breite*	Pin diameter *Bolzen-durch-messer*	Pin length *Bolzen-länge*	Plate depth *Laschen-höhe*	Plate thickness *Laschen-dicke*	Ultimate tensile strength *Min. Bruchkraft*	Average tensile strength *Durchschn. Bruchkraft*	Weight per meter *Gewicht*
	P	d_1 max	b_1 min	d_2 max	L max	h_2	T	Q min	Q_0	q
	mm	mm	mm	mm	mm	mm	mm	kN/LB	kN	kg/m
2010	63.50	31.75	38.10	15.90	89.0	47.8	7.9	250.0/56818	270.0	13.53
2510	78.10	31.75	36.90	16.00	94.8	40.0	8.0	271.0/61590	292.6	10.72
2510H	78.10	31.75	36.90	16.50	95.3	45.0	9.5	280.4/63727	302.8	12.70
2512(MXS3011)	77.90	41.28	39.60	19.05	100.0	57.0	9.7	340.0/77272	367.2	18.40
2512F2	77.90	41.28	38.50	19.05	103.4	60.0	10.0	400.0/90909	420.0	20.28
2814	88.90	44.45	36.60	22.23	117.6	58.0	12.7	471.0/105955	507.6	25.70
3214	103.20	44.45	48.00	22.00	123.5	55.0	13.0	476.0/108180	514.0	23.60
3214F1	103.20	44.45	49.20	23.90	129.0	60.0	14.0	666.4/151450	700.0	26.70
3315	103.45	45.24	49.30	23.85	130.0	63.5	14.2	550.0/125000	594.0	27.71
3618	114.30	57.15	52.30	27.97	138.0	79.2	14.2	760.0/172727	820.8	41.20
4020	127.00	63.50	69.90	31.78	165.7	88.9	15.7	987.0/224300	1069.2	48.60
2184	152.40	76.20	35.00	22.20	96.0	51.0	9.5	330.0/75000	378.0	18.17
MXS882	66.27	22.23	28.58	11.10	68.5	28.5	6.4	115.6/26272	124.8	5.30
MXS3075	78.10	31.75	38.10	16.46	93.5	44.5	9.7	334.0/75909	360.7	13.45
MXS1242	103.20	44.45	49.20	22.23	124.5	57.0	12.8	623.0/141591	672.8	24.63
SS588	66.27	22.23	28.60	11.11	63.7	28.6	6.4	130.0/29545	144.0	5.46
SS588F1	66.27	22.23	27.00	11.11	62.0	28.6	6.4	88.9/20205	97.8	5.39
SS588F2	66.27	22.23	27.00	9.53	59.0	25.4	5.6	84.46/19195	91.2	4.26
SS568H	77.90	41.30	39.70	19.05	97.6	57.0	9.5	340.0/77272	367.2	19.80
SS40H(P)	78.11	31.75	38.10	15.88	97.0	41.5	9.5	250.0/56818	280.0	12.60
SS124	103.20	44.45	49.20	22.23	127.2	57.0	12.7	560.0/127272	590.0	22.57
SS15F1	103.45	45.24	47.60	23.85	133.0	60.0	15.0	650/147726	616.0	27.34
SS1245	103.45	45.20	49.60	23.80	129.4	60.0	14.5	550/125000	605.0	31.19
SS635H	114.30	57.20	52.40	27.94	137.0	76.2	14.5	760/172727	836.0	37.80

Heavy duty cranked-link transmission chains
Rotaryketten

Donghua Chain No. *Donghua Ketten Nr.*	Pitch *Teilung*	Roller diameter *Rollen-durch-messer*	Width between inner plates *Innere Breite*	Pin diameter *Bolzen-durch-messer*	Pin length *Bolzen-länge*	Plate depth *Laschen-höhe*	Plate thickness *Laschen-dicke*	Ultimate tensile strength *Min. Bruchkraft*	Average tensile strength *Durchschn. Bruchkraft*	Weight per meter *Gewicht*
	P	d_1 max	b_1 min	d_2 max	L max	h_2	T	Q min	Q_0	q
	mm	mm	mm	mm	mm	mm	mm	kN/LB	kN	kg/m
2010H	63.50	31.75	31.75	15.88	97.0	41.5	9.5	250/56815	275.0	11.91
SS2065	50.80	28.58	32.50	15.05	79.5	38.0	7.9	220/49998	242.0	12.14
4020SH	127.00	63.50	69.90	31.78	165.7	88.9	15.7	1332.8/302893	1246.0	48.60
2814F1	88.90	44.45	36.90	22.23	117.6	60.0	13.5	556/126358	611.0	24.20
2814F2	88.90	44.45	38.60	22.23	119.6	58.0	12.7	559/127040	614.9	25.40
SH1245	103.45	45.30	49.60	23.80	130.0	60.0	14.5	722/164084	794.0	31.00
P153	153.619	34.93	53.98	17.48	107.0	44.5	9.5	150/34090	165.0	10.90
P153F2	153.619	34.93	53.98	17.48	100.0	44.5	8.0	150/34090	165.0	9.80
2510F1	78.10	31.75	36.60	16.00	88.9	38.1	8.0	124.5/28295	137.0	9.93
SS635HF1	114.30	57.20	52.40	27.94	137.0	76.2	17.5	964/219085	1060.0	37.90
RO6042F1	152.40	76.20	76.30	44.00	184.0	120.0	19.0	1500/340900	1600.0	63.60
SS568HF2	77.90	31.75	39.70	19.05	98.5	57.0	9.5	447/101588	491.0	16.90
RO1205	127.00	63.50	65.00	31.75	147.6	82.5	14.2	872/198177	955.0	42.93
2510F2	78.10	31.75	36.60	15.75	88.0	38.1	8.0	225/51135	248.0	11.70
*MX603	76.20	22.50	38.00	14.00	88.0	40.0	8.0	147/33408	161.0	9.20
4824	152.40	76.20	74.60	38.10	186.0	100.0	20.0	1600/363632	1700.0	69.80
R3112	50.80	28.70	31.00	14.20	73.9	41.4	6.4	168.9/38385	185.0	10.70
MXS3075F1	78.10	33.00	38.10	16.46	94.5	44.5	9.7	334/75907	365.8	14.00
MXS3075F2	78.10	31.75	38.10	17.81	90.0	45.0	8.0	333.2/75726	365.8	12.20

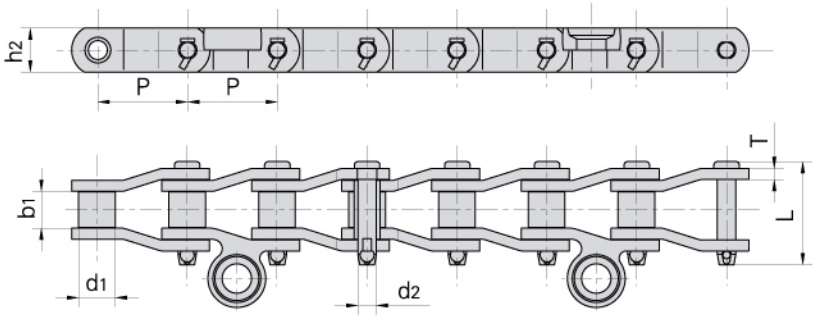



Donghua Chain No. *Donghua Ketten Nr.*	Pitch *Teilung*	Roller diameter *Rollen-durch-messer*	Width between inner plates *Innere Breite*	Pin diameter *Bolzen-durch-messer*	Pin length *Bolzen-länge*	Plate depth *Laschen-höhe*	Plate thickness *Laschen-dicke*	Ultimate tensile strength *Min. Bruchkraft*	Average tensile strength *Durchschn. Bruchkraft*
	P	d_1 max	b_1 min	d_2 max	L max	h_2	T	Q min	Q_0
	mm	mm	mm	mm	mm	mm	mm	kN/LB	kN
SS40SL	78.105	31.78	31.75	15.90	89.15	38.0	9.5	250.0/56818	266.88

*Bushing chain: d_1 in the table indicate the external diameter of the bushing
**Buchsenketten: In dieser Tabelle zeigt d_1 den Außendurchmesser der Buchsen.*

Hy-Vo Silent chains
Hy-Vo Zahnketten

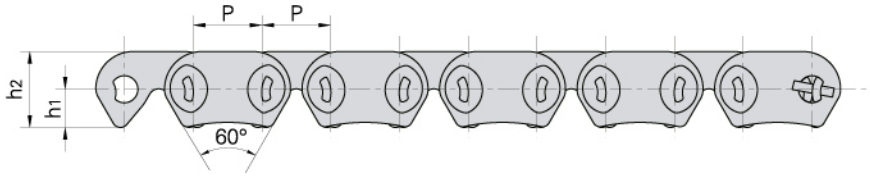

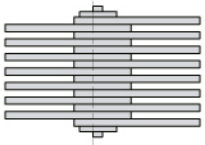

7x8

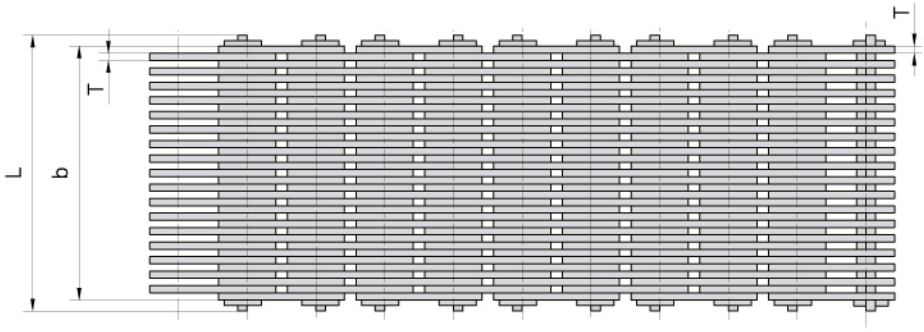

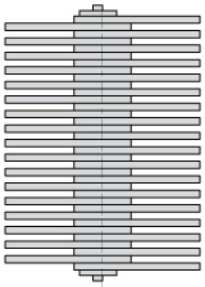

17x18

Donghua Chain No. *Donghua Ketten Nr.*	Pitch *Teilung*	Chain width *Kettenbreite*	Pin length *Bolzenlänge*	Distance from hole center to tooth *Abstand zwischen Lochmitte und Zahnspitze*	Plate depth *Laschenhöhe*	Plate thickness *Laschendicke*	Guide form *Führungstyp*	Number of plates *Anzahl der Laschen*	Ultimate tensile strength *Min. Bruchkraft*	Average tensile strength *Durchschn. Bruchkraft*	Weight per meter *Gewicht*
	P	b max	L max	h_1	h_2 max	T		n	Q min	Q_0	q
	mm	mm	mm	mm	mm	mm			kN/LB	kN	kg/m
HV6	19.05	73.5	81.3	10.50	20.90	2.0	Outside	17 × 18	174 / 39100	200	7.4
HV8	25.40	48.5	56.9	14.06	27.74	3.0	Outside	7 × 8	187 / 42022	200	7.0

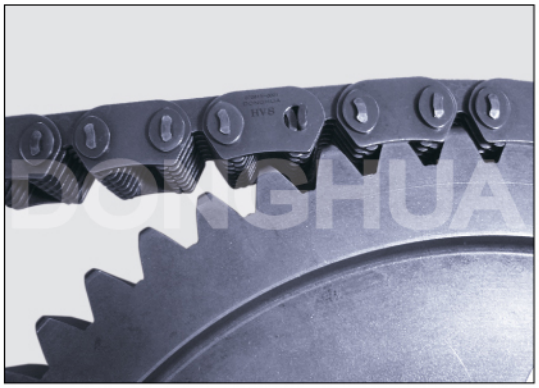

Silent chains
Zahnketten

Flank contact silent chains
Zahnketten mit äußerem Flankenkontakt

Middle guide
Innenführung

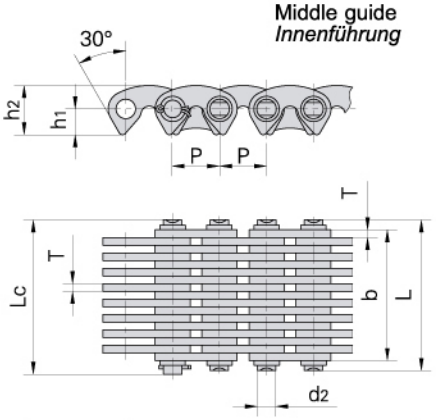

Side guide
Außenführung

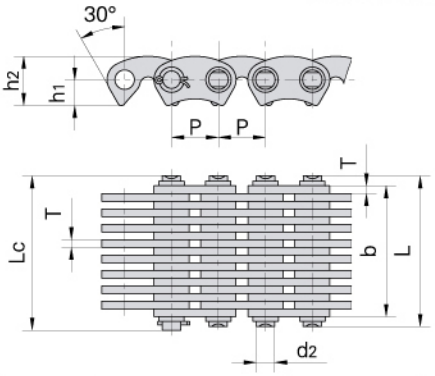

GB Chain No. *GB Ketten Nr.*	Pitch *Teilung* P mm	Chain width *Ketten-breite* b min mm	Pin diameter *Bolzen-durch-messer* d2 max mm	Pin length *Bolzen-länge* L max mm	Pin length *Bolzen-länge* Lc max mm	Distance from hole center to tooth *Abstand zwischen Lochmitte und Zahnspitze* h1 mm	Plate depth *Laschen-höhe* h2 max mm	Plate thickness *Laschen-dicke* T max mm	Guide form *Führungs-typ*	Number of plates *Anzahl der Laschen* n	Ultimate tensile strength *Min. Bruchkraft* Q min kN/LB	Average tensile strength *Durchschn. Bruchkraft* Q0 kN	Weight per meter *Gewicht* q kg/m
SC3	9.525	13.5	3.95	18.5	20.0	5.3	10.0	1.5	Outside	9	10.0/2272	11.2	0.60
		16.5		21.5	23.0				Outside	11	12.5/2840	14.0	0.73
		19.5		24.5	26.0				Outside	13	15.0/3409	16.8	0.85
		22.5		27.5	29.0				Outside	15	17.5/3997	19.6	1.00
		28.5		33.5	35.0				Inside	19	22.5/5114	25.2	1.26
SC4	12.700	19.5	5.08	24.5	26.0	7.0	13.4	1.5	Outside	13	23.4/5318	26.2	1.15
		22.5		27.5	29.0				Outside	15	27.4/6227	30.6	1.33
		25.5		30.5	32.0				Outside	17	31.3/7114	35.0	1.50
		28.5		33.5	35.0				Inside	19	35.2/8000	39.4	1.68
		34.5		39.5	41.0				Inside	23	43.0/9772	48.1	2.04
		40.5		45.5	47.0				Inside	27	50.8/11364	56.8	2.39
		46.5		51.5	53.0				Inside	31	58.6/13318	65.6	2.74
		52.5		57.5	59.0				Inside	35	66.4/15091	74.3	3.10
SC5	15.875	30.0	5.92	37.0	38.2	8.7	16.7	2.0	Inside	15	45.6/10364	50.6	2.21
		38.0		45.0	46.2				Inside	19	58.6/13318	65.0	2.80
		46.0		53.0	54.2				Inside	23	71.7/16295	79.5	3.39
		54.0		61.0	62.4				Inside	27	84.7/19250	94.0	3.99
		62.0		69.0	70.4				Inside	31	97.7/22204	108.4	4.58
SC6	19.050	38.0	6.90	45.0	46.5	10.5	20.0	2.0	Inside	19	70.0/15909	77.6	3.37
		46.0		53.0	54.5				Inside	23	86.0/19545	95.4	4.08
		54.0		61.0	62.8				Inside	27	102.0/23182	113.2	4.78
		62.0		69.0	70.8				Inside	31	117.0/26591	129.8	5.50
		70.0		77.0	78.8				Inside	35	133.0/30227	147.6	6.20
SC8	25.400	45.0	8.90	52.0	53.5	14.0	26.7	3.0	Inside	15	111.0/25227	123.2	5.31
		51.0		58.0	59.5				Inside	17	125.0/28409	138.7	6.02
		57.0		64.0	65.5				Inside	19	141.0/32045	156.5	6.37
		69.0		76.2	77.7				Inside	23	172.0/39091	190.9	8.15
		81.0		88.2	89.7				Inside	27	203.0/46163	225.3	9.57
		93.0		100.2	101.7				Inside	31	235.0/53409	260.8	10.98
SC10	31.750	57.0	10.84	66.6	69.6	17.5	33.4	3.0	Inside	19	165.0/37500	183.1	8.42
		69.0		78.6	81.6				Inside	23	201.0/45681	223.1	10.19
		81.0		90.6	93.6				Inside	27	237.0/53863	263.2	11.96
		93.0		102.6	105.6				Inside	31	273.0/62045	303.0	13.73
		105.0		114.6	117.6				Inside	35	310.0/70454	341.0	15.50
		117.0		126.6	129.6				Inside	39	346.0/78636	380.6	17.27

Silent chains
Zahnketten

Croch contact silent chains
Zahnketten mit innerem Flankenkontakt

Middle guide
Innenführung

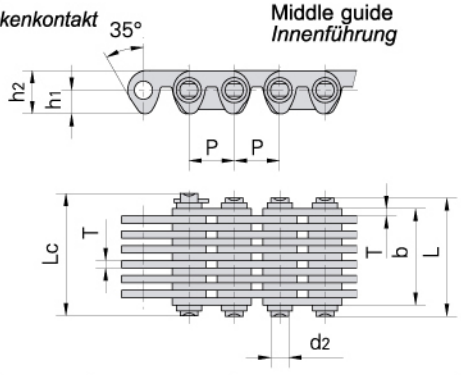

Side guide
Außenführung

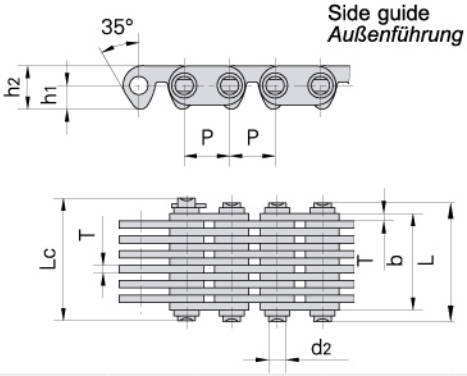

DIN/ISO Chain No. *DIN/ISO Ketten Nr.*	Pitch *Teilung*	Chain width *Ketten-breite*	Pin diameter *Bolzen-durch-messer*	Pin length *Bolzen-länge*		Distance from hole center to tooth *Abstand zwischen Lochmitte und Zahnspitze*	Plate depth *Laschen-höhe*	Plate thickness *Laschen-dicke*	Guide form *Führungs-typ*	Number of plates *Anzahl der Laschen*	Ultimate tensile strength *Min. Bruchkraft*	Average tensile strength *Durchschn. Bruchkraft*	Weight per meter *Gewicht*
	P	b min	d2 max	L max	Lc max	h1	h2 max	T max		n	Q min	Q0	q
	mm	mm	mm	mm	mm	mm	mm	mm			kN/LB	kN	kg/m
C4–120	12.7	19.5	5.08	24.5	26.0	6.62	12.1	1.5	Inside	13	20.0/4545	22.2	1.20
C4–123		22.5		27.5	29.0				Inside	15	23.0/5227	25.5	1.37
C4–129		28.5		33.5	35.0				Inside	19	28.5/6477	31.6	1.72
C4–132		31.5		36.5	38.0				Inside	21	31.5/7159	34.9	1.89
C4–138		37.5		42.5	44.0				Inside	25	38.0/8636	42.1	2.22
C4–150		49.5		54.5	56.0				Inside	33	50.0/11363	55.5	2.90
C4–320	12.7	19.5	5.08	24.5	26.0	6.62	12.1	1.5	Outside	13	20.0/4545	22.2	1.21
C4–323		22.5		27.5	29.0				Outside	15	23.0/5227	25.5	1.38
C4–329		28.5		33.5	35.0				Outside	19	28.5/6477	31.6	1.73
C4–332		31.5		36.5	38.0				Outside	21	31.5/7159	34.9	1.90
C4–338		37.5		42.5	44.0				Outside	25	38.0/8636	42.1	2.23

Self-tooth-forming chains(P.I.V. chains)
P.I.V. Ketten

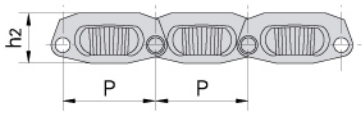

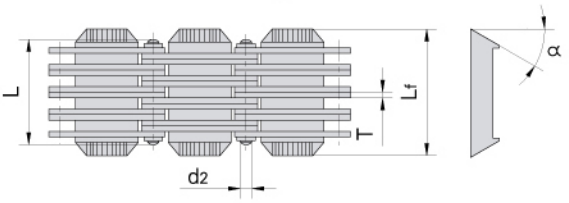

JB Chain No. *JB Ketten Nr.*	Pitch *Teilung*	Pin diameter *Bolzen-durch-messer*	Pin length *Bolzen-länge*	Plate depth *Laschen-höhe*	Plate thickness *Laschen-dicke*	Width over friction plate *Reibplatten-breite*	Angle of friction plate *Reibplatten-winkel*	Ultimate tensile strength *Min. Bruchkraft*	Average tensile strength *Durchschn. Bruchkraft*	Weight per meter *Gewicht*
	P	d2 max	L max	h2 max	T max	Lf	α	Q min	Q0	q
	mm	mm	mm	mm	mm	mm		kN/LB	kN	kg/m
A0	18.75	3.00	19.5	9.5	1.0	24.0	15°	9.0/2045	9.9	1.00
A1(A2)	25.00	3.00	30.1	13.5	1.5	37.8	15°	21.0/4772	23.3	2.23
A3	28.60	3.00	35.3	16.0	1.5	44.2	15°	38.5/8750	42.7	3.04
A4	36.00	4.00	48.5	20.5	1.5	58.5	15°	61.5/13977	68.2	5.54
A5	36.00	4.00	60.5	20.5	1.5	70.0	15°	71.0/16136	78.8	6.70

MOTORCYCLE CHAINS
MOTORRADKETTEN

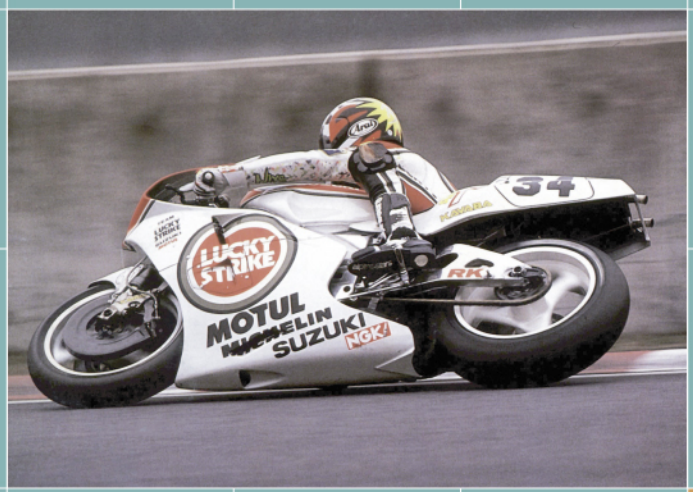



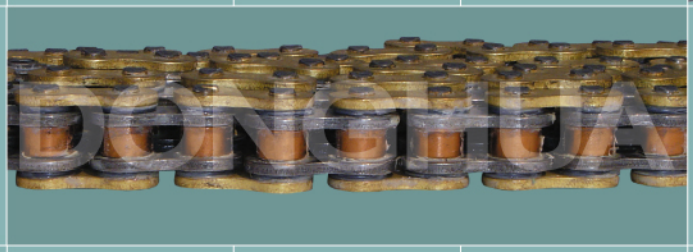

Motorcycle chains
Motorradketten

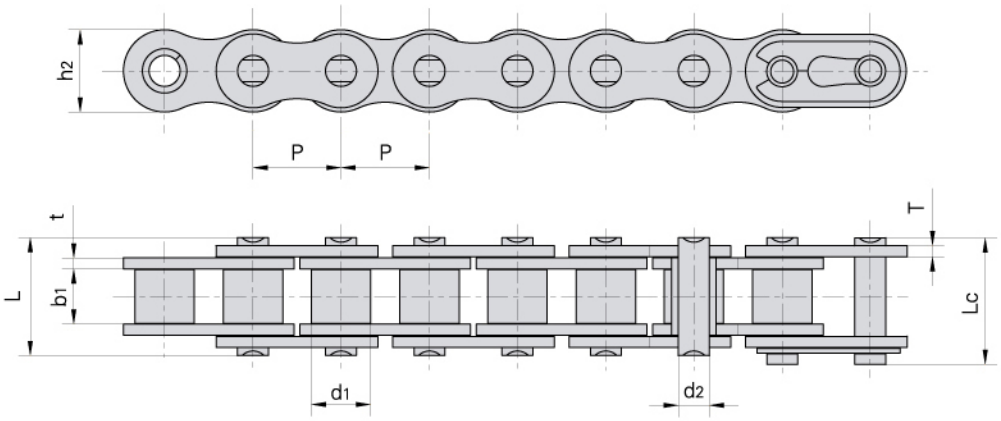

Donghua Chain No. *Donghua Ketten Nr.*	Pitch *Teilung*	Roller diameter *Rollen-durch-messer*	Width between inner plates *Innere Breite*	Pin diameter *Bolzen-durch-messer*	Pin length *Bolzen-länge*		Inner plate depth *Innen-laschen-höhe*	Plate thickness *Laschen-dicke*	Ultimate tensile strength *Min. Bruchkraft*	Average tensile strength *Durchschn. Bruchkraft*	Weight per meter *Gewicht*
	P	d_1 max	b_1 min	d_2 max	L max	Lc max	h_2 max	t/T max	Q min	Q_0	q
	mm	mm	mm	mm	mm	mm	mm	mm	kN/LB	kN	kg/m
*25H	6.350	3.30	3.18	2.31	8.90	9.50	6.00	1.04	4.80/1091	5.5	0.17
*25H(E)	6.350	3.30	3.18	2.31	8.90	9.50	6.00	1.04	5.80/1305	6.0	0.18
*219H	7.774	4.59	5.00	3.01	11.90	12.70	7.40	1.2/1.04	6.60/1500	7.4	0.28
*270H	8.500	5.00	4.75	3.28	13.15	–	8.45	1.8/1.4	9.80/2227	11.0	0.33
*219HF1	7.785	4.60	4.50	3.28	13.00	–	7.00	2.0/1.40	9.0/2024	9.8	0.37
*T3F	9.525	6.00	9.50	4.50	18.60	–	9.30	1.85/1.50	11.80/2682	14.1	0.61
420	12.700	7.77	6.25	3.96	14.70	16.10	12.00	1.50	16.00/3636	18.1	0.55
420F3	12.700	7.77	6.40	3.96	15.00	18.60	11.80	1.6/1.45	16.00/3636	18.1	0.64
420H	12.700	7.77	6.25	3.96	17.00	18.40	12.00	2.03	16.00/3636	18.1	0.76
428	12.700	8.51	7.75	4.45	16.70	18.20	11.80	1.60	18.0/4091	20.1	0.70
428H	12.700	8.51	7.85	4.45	18.80	19.90	11.80	2.03	20.60/4682	23.4	0.79
428F1	12.700	8.51	7.94	4.50	16.70	18.05	11.80	1.60	17.15/3858	20.1	0.71
428HSH	12.700	8.51	7.75	4.45	20.00	–	12.00	2.42	27.00/6074	29.4	0.89
428HF1	12.700	8.51	7.85	4.45	17.90	19.00	11.80	1.80	19.50/4387	20.7	0.74
428HF4	12.700	8.51	7.94	4.50	18.90	20.10	11.80	2.03	20.50/4682	23.4	0.82
428DS	12.700	8.51	7.94	4.45	17.90	19.30	12.00	1.85	18.62/4232	21.0	0.76
520	15.875	10.16	6.25	5.08	17.50	19.00	15.09	2.03	26.50/6022	29.7	0.89
520F2	15.875	10.16	6.35	5.24	17.50	19.05	15.09	2.03	26.50/6022	29.7	0.97
520F3	15.875	10.16	6.48	5.08	17.50	19.00	15.09	2.03	26.50/6022	29.7	0.89
520H	15.875	10.16	6.25	5.08	19.30	20.80	15.09	2.42	26.50/6022	31.5	1.10
525	15.875	10.16	7.95	5.08	19.30	20.70	15.09	2.03	26.50/6022	29.9	1.06
525H	15.875	10.16	7.95	5.08	20.90	22.30	15.09	2.42	26.50/6022	29.9	1.20
530	15.875	10.16	9.40	5.08	20.70	22.20	15.09	2.03	26.50/6022	29.7	1.06
530SH	15.875	10.16	9.40	5.08	22.10	–	15.09	2.42	32.80/7379	33.5	1.24
630	19.050	11.91	12.57	9.54	25.90	22.70	18.00	2.42	31.80/7227	41.5	1.50

*Bushing chain: d1 in the table indicate the external diameter of the bushing.
**Buchsenketten: In dieser Tabelle zeigt d1 den Außendurchmesser der Buchsen.*

O-Ring motorcycle chains
Motorradketten mit O-Ring

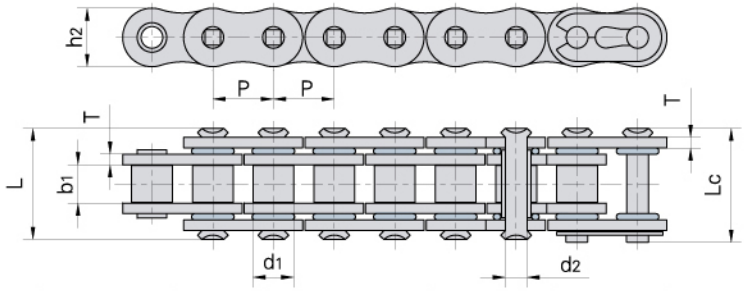

Donghua Chain No. / Donghua Ketten Nr.	Pitch / Teilung	Roller diameter / Rollen-durchmesser	Width between inner plates / Innere Breite	Pin diameter / Bolzen-durchmesser	Pin length / Bolzenlänge		Inner plate depth / Innenlaschenhöhe	Plate thickness / Laschendicke	Ultimate tensile strength / Min. Bruchkraft	Average tensile strength / Durchschn. Bruchkraft	Weight per meter / Gewicht
	P	d1 max	b1 min	d2 max	L max	Lc max	h2 max	T max	Q min	Q0	q
	mm	mm	mm	mm	mm	mm	mm	mm	kN/LB	kN	kg/m
420OR	12.700	7.77	6.25	3.96	16.65	17.95	12.00	1.50	16.0/3599	17.00	0.62
428HVS	12.700	8.51	7.94	4.45	21.30	22.40	12.30	2.03	22.0/4946	23.00	0.85
50LD	15.875	10.16	9.53	5.08	23.40	24.60	15.09	2.03	22.2/5045	26.50	1.12
520OR	15.875	10.16	6.70	5.30	21.20	22.30	15.09	2.20	32.0/7200	34.00	1.11
520F1OR	15.875	10.16	6.25	5.30	21.20	22.30	15.09	2.20	32.0/7200	34.00	1.09
520V6	15.875	10.16	6.25	5.08	19.60	21.30	15.09	2.03	22.2/5045	26.50	0.96
520HOR	15.875	10.16	6.25	5.24	21.52	22.92	15.09	2.42	26.5/6022	29.60	1.26
525F1OR	15.875	10.16	7.95	5.30	23.10	24.00	15.09	2.20	32.0/7200	34.00	1.16
530HOR	15.875	10.16	9.53	5.24	24.80	26.20	15.09	2.42	29.0/6524	30.00	1.39

O-Ring chains
Ketten mit O-Ring

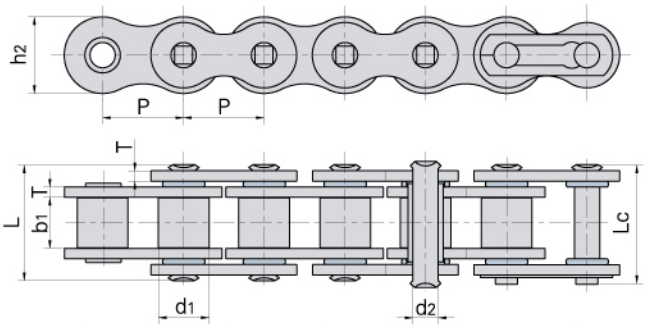

Donghua Chain No. / Donghua Ketten Nr.	Pitch / Teilung	Roller diameter / Rollen-durchmesser	Width between inner plates / Innere Breite	Pin diameter / Bolzen-durchmesser	Pin length / Bolzenlänge		Plate depth / Laschenhöhe	Plate thickness / Laschendicke	Ultimate tensile strength / Min. Bruchkraft	Average tensile strength / Durchschn. Bruchkraft	Weight per meter / Gewicht
	P	d1 max	b1 min	d2 max	L max	Lc max	h2 max	T max	Q min	Qo	q
	mm	mm	mm	mm	mm	mm	mm	mm	kN/LB	kN	kg/m
40 OR	12.700	7.95	7.85	3.96	18.3	19.6	12.00	1.50	14.1/3205	17.50	0.67
50 OR	15.875	10.16	9.40	5.08	23.1	24.8	15.09	2.03	22.2/5045	29.40	1.19
60 OR	19.050	11.91	12.57	5.94	28.5	30.4	18.00	2.42	31.8/7227	41.50	1.62
60HT OR	19.050	11.91	12.57	5.94	31.7	33.2	18.00	3.25	55/12500	58.00	1.96
80 OR	25.400	15.88	15.75	7.92	35.6	37.3	24.00	3.25	56.7/12886	69.40	2.70
100 OR	31.750	19.05	18.95	9.53	43.3	47.0	30.00	4.00	88.5/20114	109.20	3.91
120 OR	38.100	22.23	25.22	11.11	54.0	57.5	35.70	4.80	127.0/28864	156.30	6.34
08B OR	12.700	8.51	7.75	4.45	18.8	19.9	11.80	1.60	18.0/4091	19.40	0.74

O-Ring chains
Ketten mit O-Ring

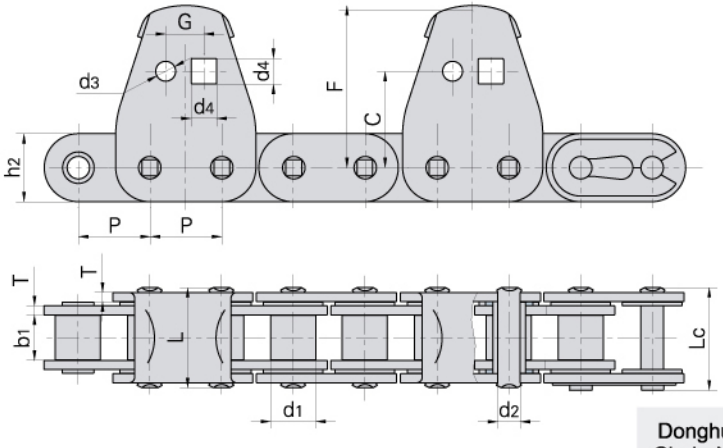



Donghua Chain No.	P	C	F	G	d3	d4
Donghua Ketten Nr.	mm	mm	mm	mm	mm	mm
C80F3 OR	25.4	34	57.2	13.5	7	9

Donghua Chain No.	Pitch	Roller diameter	Width between inner plates	Pin diameter	Pin length		Plate depth	Plate thickness	Ultimate tensile strength	Average tensile strength
	Teilung	*Rollen-durch-messer*	*Innere Breite*	*Bolzen-durch-messer*	*Bolzen-länge*		*Laschen-höhe*	*Laschen-dicke*	*Min. Bruchkraft*	*Durchschn. Bruchkraft*
Donghua Ketten Nr.	P	d1 max	b1 min	d2 max	L max	Lc max	h2 max	T max	Q min	Qo
	mm	mm	mm	mm	mm	mm	mm	mm	kN/LB	kN
C80F3 OR	25.4	15.88	15.75	7.92	36.6	38.7	24.0	3.25	56.7/12886	69.4

Engine mechanism chains (Timing chains)
Steuerketten

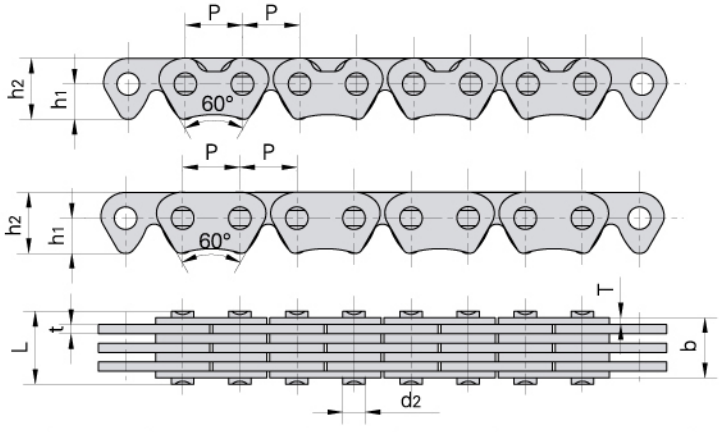

Laschenkombination
Plates lacing

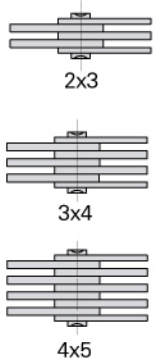

Donghua Chain No.	Pitch	Chain width	Pin diameter	Pin length	Distance from hole center to tooth	Plate depth	Plate thickness	Guide form	Number of plates	Ultimate tensile strength	Average tensile strength	Weight per meter
	Teilung	*Ketten-breite*	*Bolzen-durch-messer*	*Bolzen-länge*	*Abstand zwischen Lochmitte und Zahnspitze*	*Laschen-höhe*	*Laschen-dicke*	*Führungs-typ*	*Anzahl der Laschen*	*Min. Bruchkraft*	*Durchschn. Bruchkraft*	*Gewicht*
Donghua Ketten Nr.	P	b max	d2 min	L max	h1	h2 max	t/T max		n	Q min	Qo	q
	mm	mm	mm	mm	mm	mm	mm			kN/LB	kN	kg/m
CL04	6.35	4.35	2.50	6.05	3.94	6.80	1.04/0.75	Outside	5(2 x 3)	5.19/1179	5.4	0.22
CL04	6.35	6.35	2.50	8.20	3.90	6.72	1.04/0.75	Outside	7(3 x 4)	8.82/2004	9.2	0.28
CL04	6.35	9.40	2.50	10.90	3.90	6.72	1.04	Outside	9(4 x 5)	11.76/2672	12.3	0.35

Engine mechanism chains (Timing chains)
Steuerketten

Our engine mechanism chains are composed of starter chains primary drive chains, automotive timing chains and oil pump chains etc..

Unsere Steuerketten umfasst Anlasserantriebsketten, Primärantriebsketten, Automobilsteuerketten und Ölpumpenketten etc..

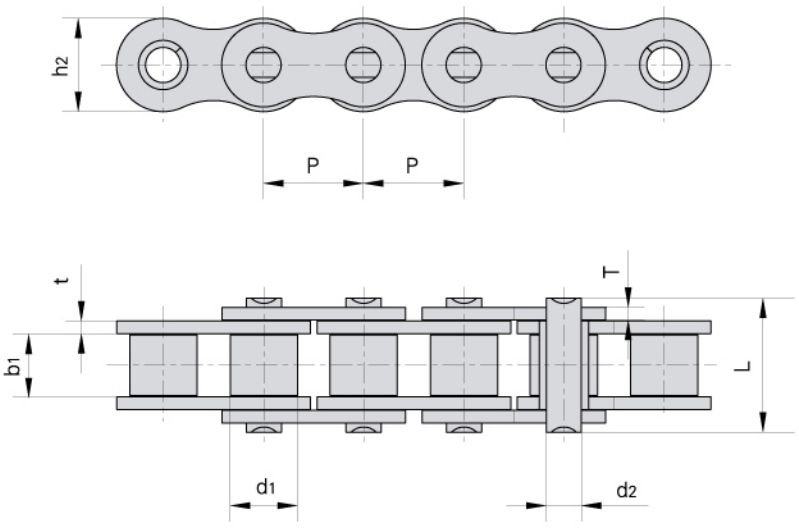

Donghua Chain No. *Donghua Ketten Nr.*	Pitch *Teilung*	Roller diameter *Rollen-durch-messer*	Width between inner plates *Innere Breite*	Pin diameter *Bolzen-durch-messer*	Pin length *Bolzen-länge*	Inner plate depth *Innen-laschen-höhe*	Plate thickness *Laschen-dicke*	Ultimate tensile strength *Min. Bruchkraft*	Average tensile strength *Durchschn. Bruchkraft*	Weight per meter *Gewicht*
	P	d_1 max	b_1 min	d_2 max	L max	h_2 max	t/T max	Q min	Q_0	q
	mm	mm	mm	mm	mm	mm	mm	kN/LB	kN	kg/m
*25H	6.350	3.30	3.18	2.31	8.90	6.00	1.04	4.8/1091	5.5	0.17
*25–1	6.350	3.30	3.18	2.31	7.90	6.00	0.80	3.5/795	4.6	0.15
*25–2	6.350	3.30	3.18	2.31	14.50	6.00	0.80	7.0/1591	8.6	0.28
*219H	7.774	4.59	5.00	3.01	11.90	7.40	1.2/1.04	6.6/1500	7.4	0.28
C219H	7.774	5.00	5.00	3.01	11.90	7.40	1.2/1.04	6.6/1500	7.4	0.23
*270H	8.500	5.00	4.75	3.28	13.15	8.45	1.8/1.4	9.8/2227	11.0	0.33
*35	9.525	5.08	4.77	3.58	12.40	9.00	1.30	7.9/1795	10.8	0.33
▲BF05T	8.000	4.71	4.61	3.05	11.48	7.60	1.3/1.04	7.0/1591	9.8	0.35
▲P8.13	8.130	5.65	4.60	3.05	12.00	7.65	1.3/1.2	8.5/1912	9.8	0.39
▲05BT	8.000	5.65	4.60	3.05	12.00	7.65	1.3/1.2	8.5/1912	9.8	0.40
▲ 05E	8.000	5.65	4.61	3.05	12.30	7.65	1.3/1.04	8.5/1912	9.8	0.39
▲06AT	9.525	6.35	3.94	3.28	10.50	8.20	1.3/1.04	8.9/2023	10.0	0.34
▲06BT–1	9.525	6.35	5.72	3.28	12.50	8.20	1.3/1.04	9.0/2045	10.0	0.38
▲06BT–2	9.525	6.35	5.72	3.28	22.90	8.20	1.3/1.04	16.9/3841	17.9	0.73
▲06BF14	9.525	6.35	5.05	3.28	13.15	8.20	1.5/1.3	11.2/2520	12.5	0.39
▲06BF14–2	9.525	6.35	5.05	3.28	24.70	8.20	1.5/1.3	22.4/5040	24.0	0.81

*Bushing chain: d1 in the table indicate the external diameter of the bushing.
**Buchsenketten: In dieser Tabelle zeigt d1 den Außendurchmesser der Buchsen.*

▲ Straight side plates
▲ *Gerade Laschen*

Self-lubrication roller chains
Selbstschmierungsrollenketten

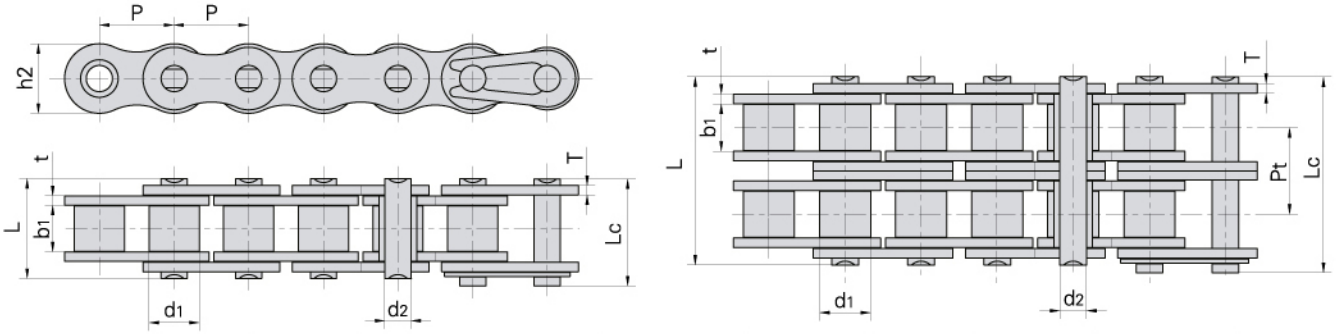

Donghua Chain No. *Donghua Ketten Nr.*	Pitch *Teilung*	Roller diameter *Rollen-durch-messer*	Width between inner plates *Innere Breite*	Pin diameter *Bolzen-durch-messer*	Pin length *Bolzen-länge*		Inner plate depth *Innen-laschen-höhe*	Plate thickness *Laschen-dicke*	Transverse pitch *Mitten-abstand*	Ultimate tensile strength *Min. Bruchkraft*	Weight per meter *Gewicht*
	P	d_1 max	b_1 min	d_2 max	L max	Lc max	h_2 max	t/T max	Pt	Q min	q
	mm	mm	mm	mm	mm	mm	mm	mm	mm	kN/LB	kg/m
08BSLR	12.700	8.51	7.75	4.45	16.7	18.2	11.80	1.6	–	18.0/4091	0.69
08BSLRF1	12.700	8.51	7.75	4.45	17.3	18.7	11.80	1.6	–	18.0/4091	0.72
10BSLR	15.875	10.16	9.65	5.08	19.5	20.9	14.70	1.7	–	22.4/5091	0.93
10BSLRF1	15.875	10.16	9.65	5.08	19.9	21.6	14.70	1.7	–	22.4/5091	0.97
10BSLRF2	15.875	10.16	9.65	4.45	19.5	20.9	14.70	1.7	–	14.0/3181	1.20
C10BSLR	15.875	10.16	9.65	5.08	19.5	20.9	14.70	1.7	–	22.4/5089	1.06
12BSLR	19.050	12.07	11.68	5.72	22.5	24.2	16.00	1.85	–	29.0/6591	1.15
12BSLRF1	19.050	12.07	11.68	5.72	22.9	24.7	16.00	1.85	–	29.0/6591	1.19
C12BSLR	19.050	12.07	11.68	5.72	22.9	24.9	16.00	1.85	–	29.0/6589	1.32
16BSLR	25.400	15.88	17.02	8.28	36.1	37.4	21.00	4.15/3.1	–	60.0/13636	2.71
16BSLRF1	25.400	15.88	17.02	8.28	36.7	39.7	21.00	4.15/3.1	–	60.0/13636	2.73
C16BF1SLR	25.400	15.88	17.02	8.28	36.1	37.4	24.00	4.15	–	60.0/13633	3.38
C16BSLRF1	25.400	15.88	17.02	8.28	36.7	39.7	21.00	4.15	–	60.0/13633	2.98
C16BSLRF2	25.400	15.88	17.02	8.28	36.7	38.2	24.00	4.15	–	60.0/13633	3.39
40SLR	12.700	7.95	7.85	3.96	16.6	17.8	12.00	1.5	–	14.1/3205	0.62
50SLR	15.875	10.16	9.40	5.08	20.7	22.2	15.09	2.03	–	22.0/5045	1.02
60SLR	19.050	11.91	12.57	5.94	27.5	29.3	18.00	3.25/2.42	–	34.2/7772	1.65
60HSLR	19.050	11.91	12.57	5.94	29.2	31.0	18.00	3.25	–	31.8/7227	1.95
C60SLR	19.050	11.91	12.57	5.94	25.9	27.7	18.20	2.42	–	31.8/7227	1.83
80SLR	25.400	15.88	15.75	7.92	32.7	35.0	24.00	3.25	–	56.7/12886	2.60
80HSLR	25.400	15.88	15.75	7.92	36.2	38.9	24.00	4.0	–	56.7/12886	3.03
C80SLR	25.400	15.88	15.75	7.92	32.7	35.0	24.00	3.25	–	56.7/12886	3.10
100SLR	31.750	19.05	18.90	9.53	40.4	44.7	30.00	4.0	–	86.7/19699	3.94
08BSLR–2	12.700	8.51	7.75	4.45	31.2	32.2	11.80	1.6	13.92	32.0/7273	1.34
10BSLR–2	15.875	10.16	9.65	5.08	36.1	37.5	14.70	1.7	16.59	44.5/10114	1.84
12BSLR–2	19.050	12.07	11.68	5.72	42.0	43.6	16.00	1.85	19.46	57.8/13136	2.31
C12BSLR–2	19.050	12.07	11.68	5.72	42.0	43.6	16.00	1.85	19.46	57.8/13136	2.31
16BSLR–2	25.400	15.88	17.02	8.28	68.0	69.3	21.00	4.15/3.1	31.88	106.0/24091	5.42
40SLR–2	12.700	7.95	7.85	3.96	31.0	32.2	12.00	1.5	14.38	28.2/6409	1.12
50SLR–2	15.875	10.16	9.40	5.08	38.9	40.4	15.09	2.03	18.11	44.4/10091	2.00
60SLR–2	19.050	11.91	12.57	5.94	50.3	52.1	18.00	3.25/2.42	22.78	68.4/15544	3.21
80SLR–2	25.400	15.88	15.75	7.92	62.7	64.3	24.00	3.25	29.29	113.4/25773	5.15
100SLR–2	31.750	19.05	18.90	9.53	76.4	80.5	30.00	4.0	35.76	173.4/39399	7.89

CHAIN COUPLINGS
KETTENKUPPLUNGEN

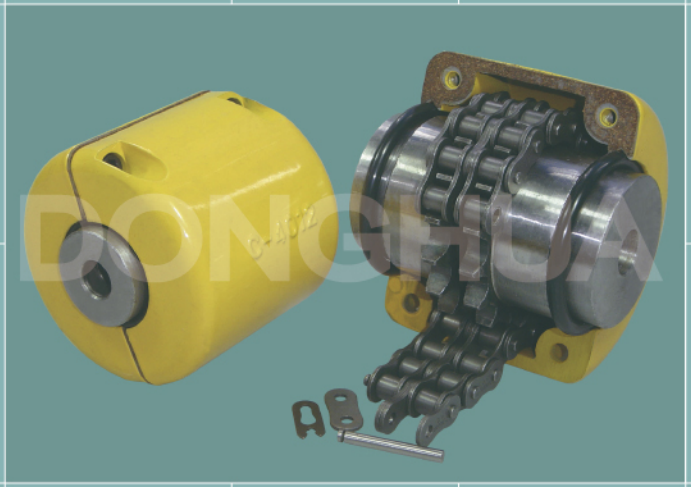

Chain couplings
Kettenkupplungen

The Donghua Chain coupling is composed of a duplex roller chain and a pair of coupling sprockets. The function of connection and detachment is done by the joint of chain. It has the characteristic of compact and powerful, excellent durability, safe and smart, simple installation and easy alignment. The Donghua Chain coupling is suitable for a wide range of coupling applications.

Die Donghua Kettenkupplung besteht aus einer Zweifach-Rollenkette und einem Paar Kupplungskettenräder, der Ein- und Ausbau erfolgt durch die Kette. Solche Kettenkupplung hat folgende Vorteile: kompakte Struktur, große Leistungsübertragung, Zuverlässigkeit, Betriebssicherheit und schönes Aussehen. Sie ist leicht zu montieren und fluchten. Die Donghua Kettenkupplung ist geeignet für viele Kupplungsanwendungen.

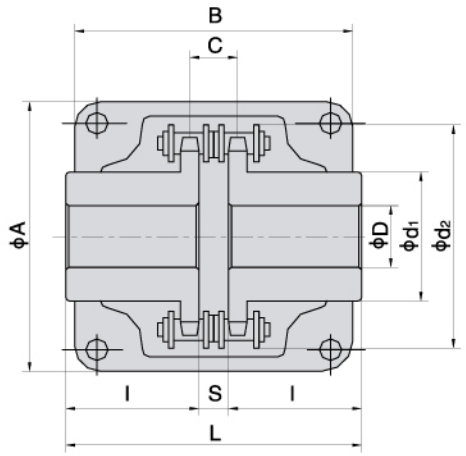

Chain coupling No. *Ketten-kupplung Nr.*	Chain No. *Ketten Nr.*	Bore Dia *Bohrungs-durchmesser*		Dimension *Abmessungen*						Inertia *Trägheit*	Approx Weight *Gewicht ca.*	Casing *Gehäuse*		
		Min	Max	L	l	S	d_1	d_2	C	$\times 10^{-3}$		Dimension *Abmessungen*		Approx Weight *Gewicht ca.*
		mm	mm	mm	mm	mm	mm	mm	mm	kgf·m²	kg	A mm	B mm	kg
DH C–3012	06B–2X12	12	16	64.8	29.8	5.2	25	45	10.2	0.233	0.4	69	63	0.3
DH C–4012	40–2X12	12	22	79.4	36.0	7.4	35	61	14.4	1.020	0.8	77	72	0.3
DH C–4014	40–2X14	12	28	79.4	36.0	7.4	43	69	14.4	1.924	1.1	84	75	0.4
DH C–4016	40–2X16	14	32	87.4	40.0	7.4	50	77	14.4	3.285	1.4	92	75	0.4
DH C–5014	50–2X14	16	35	99.7	45.0	9.7	53	86	18.1	6.010	2.2	101	85	0.5
DH C–5016	50–2X16	16	40	99.7	45.0	9.7	60	96	18.1	9.720	2.7	111	85	0.6
DH C–5018	50–2X18	16	45	99.7	45.0	9.7	70	106	18.1	15.420	3.8	122	85	0.8
DH C–6018	60–2X18	20	56	123.5	56.0	11.5	85	128	22.8	40.210	6.2	142	106	1.2
DH C–6020	60–2X20	20	60	123.5	56.0	11.5	98	140	22.8	62.870	7.8	158	105	1.6
DH C–6022	60–2X22	20	71	123.5	56.0	11.5	110	152	22.8	93.450	10.4	168	117	1.8
DH C–8018	80–2X18	20	80	141.2	63.0	15.2	110	170	29.3	142.030	12.7	190	129	2.5
DH C–8020	80–2X20	20	90	145.2	65.0	15.2	120	186	29.3	204.900	16.0	210	137	2.9
DH C–8022	80–2X22	20	100	157.2	71.0	15.2	140	202	29.3	341.170	20.2	226	137	3.6
DH C–10020	100–2X20	25	110	178.8	80.0	18.8	160	233	35.8	646.290	33.0	281	153	4.6
DH C–12018	120–2X18	35	125	202.7	90.0	22.7	170	256	45.4	1075.710	47.0	307	181	6.2
DH C–12022	120–2X22	35	140	222.7	100.0	22.7	210	304	45.4	2454.500	72.0	357	181	8.0

Coupling chains
Kupplungsketten

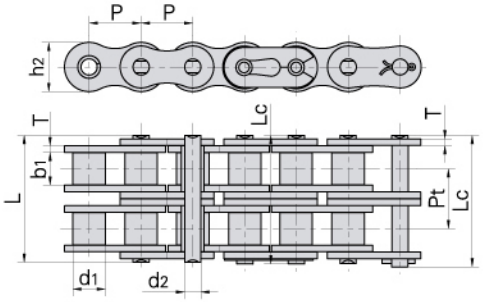



ANSI Chain No. *ANSI Ketten Nr.*	Pitch *Teilung* P	Roller diameter *Rollen-durch-messer* d1 max	Width between inner plates *Innere Breite* b1 min	Pin diameter *Bolzen-durch-messer* d2 max	Pin length *Bolzen-länge* L max	Pin length *Bolzen-länge* Lc max	Inner plate depth *Innen-laschen-höhe* h2 max	Plate thickness *Laschen-dicke* T max	Transverse pitch *Mitten-abstand* Pt	Ultimate tensile strength *Min. Bruchkraft* Q min	Average tensile strength *Durchschn. Bruchkraft* Q0	Weight per piece *Gewicht* q
	mm	mm	mm	mm	mm	mm	mm	mm	mm	kN/LB	kN	kg/pc
4012	12.700	7.95	7.85	3.96	31.0	32.2	12.00	1.50	14.38	28.2/6409	35.9	0.16
4014	12.700	7.95	7.85	3.96	31.0	32.2	12.00	1.50	14.38	28.2/6409	35.9	0.19
4016	12.700	7.95	7.85	3.96	31.0	32.2	12.00	1.50	14.38	28.2/6409	35.9	0.21
5014	15.875	10.16	9.40	5.08	38.9	40.4	15.09	2.03	18.11	44.4/10091	58.1	0.49
5016	15.875	10.16	9.40	5.08	38.9	40.4	15.09	2.03	18.11	44.4/10091	58.1	0.56
5018	15.875	10.16	9.40	5.08	38.9	40.4	15.09	2.03	18.11	44.4/10091	58.1	0.63
6018	19.050	11.91	12.57	5.94	48.8	50.5	18.00	2.42	22.78	63.6/14455	82.1	1.00
6020	19.050	11.91	12.57	5.94	48.8	50.5	18.00	2.42	22.78	63.6/14455	82.1	1.11
6022	19.050	11.91	12.57	5.94	48.8	50.5	18.00	2.42	22.78	63.6/14455	82.1	1.22
8018	25.400	15.88	15.75	7.92	62.7	64.3	24.00	3.25	29.29	113.4/25773	141.8	2.35
8020	25.400	15.88	15.75	7.92	62.7	64.3	24.00	3.25	29.29	113.4/25773	141.8	2.62
8022	25.400	15.88	15.75	7.92	62.7	64.3	24.00	3.25	29.29	113.4/25773	141.8	2.88
10018	31.750	19.05	18.90	9.53	76.4	80.5	30.00	4.00	35.76	177.0/40227	219.4	4.95
10022	31.750	19.05	18.90	9.53	76.4	80.5	30.00	4.00	35.76	177.0/40227	219.4	4.95
12018	38.100	22.23	25.22	11.10	95.8	99.7	35.70	4.80	45.44	254.0/57727	314.9	8.14
12022	38.100	22.23	25.22	11.10	95.8	99.7	35.70	4.80	45.44	254.0/57727	314.9	8.14

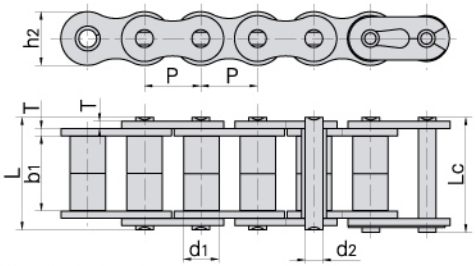

Donghua Chain No. *Donghua Ketten Nr.*	Pitch *Teilung* P	Roller diameter *Rollen-durch-messer* d1 max	Width between inner plates *Innere Breite* b1 min	Pin diameter *Bolzen-durch-messer* d2 max	Pin length *Bolzen-länge* L max	Pin length *Bolzen-länge* Lc max	Inner plate depth *Innen-laschen-höhe* h2 max	Plate thickness *Laschen-dicke* T max	Ultimate tensile strength *Min. Bruchkraft* Q min	Average tensile strength *Durchschn. Bruchkraft* Q0	Weight per meter *Gewicht* q
	mm	mm	mm	mm	mm	mm	mm	mm	kN/LB	kN	kg/m
06BF27	9.525	6.35	18.80	3.28	26.5	28.2	8.20	1.30	9.0/2045	9.63	0.770
06BF31	9.525	6.35	16.40	3.28	23.4	24.4	8.20	1.30	9.0/2045	9.63	0.660
08AF36	12.700	7.95	21.70	3.96	30.8	32.1	12.00	1.50	13.8/3135.36	16.20	1.070
08BF97	12.700	8.51	15.50	4.45	24.8	26.2	11.80	1.60	18.0/4989.6	19.20	0.980

Coupling chains
Kupplungsketten

Donghua Chain No. *Donghua Ketten Nr.*	Pitch *Teilung*	Roller diameter *Rollen-durch-messer*	Width between inner plates *Innere Breite*	Pin diameter *Bolzen-durch-messer*	Pin length *Bolzen-länge*		Inner plate depth *Innen-laschen-höhe*	Plate thickness *Laschen-dicke*	Ultimate tensile strength *Min. Bruchkraft*	Average tensile strength *Durchschn. Bruchkraft*	Weight per meter *Gewicht*
	P	d_1 max	b_1 min	d_2 max	L max	Lc max	h_2 max	T max	Q min	Q_0	q
	mm	mm	mm	mm	mm	mm	mm	mm	kN/LB	kN	kg/m
10AF13	15.875	10.16	16.31	5.08	27.6	29.1	15.09	2.03	22.20/5045	27.50	1.350
12AF2	19.050	11.91	19.10	5.94	32.6	34.4	18.00	2.42	31.80/7227	38.20	1.900
12AF6	19.050	11.91	18.80	5.94	31.9	33.5	18.00	2.42	31.80/7227	38.20	1.870
12AF26	19.050	11.91	19.36	5.94	31.9	33.5	18.00	2.42	31.80/7227	38.20	1.940
12AF54	19.050	11.91	19.50	5.84	31.9	31.9	18.00	2.29	31.10/7066	38.20	1.607
12AF34	19.050	11.91	19.00	5.94	31.9	31.9	18.00	2.42	31.10/7066	38.20	1.860
16AF25	25.400	15.88	25.58	7.92	42.4	43.9	24.00	3.25	56.70/12886	63.50	3.260
16AF40	25.400	15.88	70.00	7.92	87.6	91.1	24.00	3.25	56.70/12882	63.50	5.780

Bushing chains
Buchsenketten

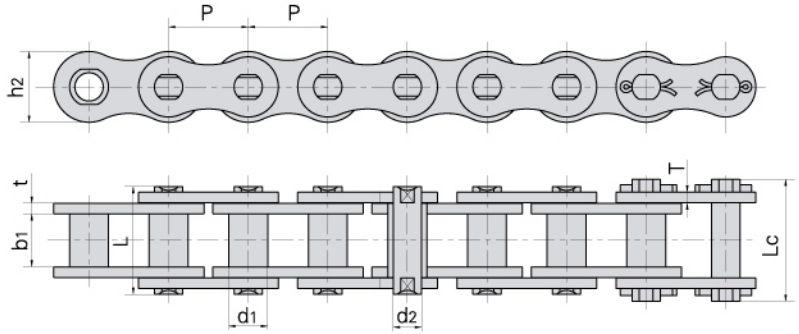

Donghua Chain No. *Donghua Ketten Nr.*	Pitch *Teilung*	Bush diameter *Buchsen-durch-messer*	Width between inner plates *Innere Breite*	Pin diameter *Bolzen-durch-messer*	Pin length *Bolzen-länge*		Plate depth *Laschen-höhe*	Plate thickness *Laschen-dicke*	Ultimate tensile strength *Min. Bruchkraft*	Average tensile strength *Durchschn. Bruchkraft*	Weight per meter *Gewicht*
	P	d_1 max	b_1 min	d_2 max	L max	Lc max	h_2 max	t/T max	Q min	Q_0 min	q
	mm	mm	mm	mm	mm	mm	mm	mm	kN/LB	kN	kg/m
P19.05	19.05	12.7	12.5	7.5	31.6	33.6	20.0	4.15/3.25	50.0/11248	55.0	2.56
P20–B	20.00	12.0	16.0	8.0	33.0	36.0	18.0	3.00	25.0/5624	27.5	2.14
P20F3–B	20.00	12.0	16.0	8.0	33.0	36.0	19.0	3.00	25.0/5624	27.5	2.03
P25–B	25.00	15.0	18.0	10.0	35.0	39.0	24.0	3.00	31.5/7086	34.7	3.17
P25F1–B	25.00	15.0	18.0	10.0	35.0	39.0	24.0	3.00	31.5/7086	34.7	2.67
P30F2–B	30.00	17.0	20.0	11.0	41.0	45.4	28.0	4.00	40.0/8998	44.0	4.25
P30F6–B	30.00	17.0	20.0	11.0	42.4	46.0	28.0	4.00	40.0/8998	44.0	3.75
P35F2–B	35.00	18.0	22.0	12.0	44.5	48.0	30.0	4.00	50.0/11248	55.0	4.33
P35F5–B	35.00	18.0	22.0	12.0	44.5	48.0	30.0	4.00	50.0/11248	55.0	3.77
P36–B	36.00	18.0	22.0	12.5	44.5	49.0	30.0	4.00	60.0/13497	66.0	4.20
P40–B	40.00	20.0	25.0	14.0	52.4	57.0	35.0	5.00	63.0/14172	69.3	5.43
P45–B	45.00	22.0	30.0	16.0	62.0	66.5	40.0	6.00	80.0/17996	88.0	7.54
P50–B	50.00	26.0	35.0	18.0	68.0	73.5	44.0	6.00	100.0/22495	110.0	8.90
*P50.8F7	50.80	18.5	25.0	14.5	53.5	57.5	40.0	5.00	120.0/26994	132.0	6.30
P55–B	55.00	30.0	45.0	20.0	88.0	93.5	49.0	8.00	125.0/28119	137.5	13.92
P60–B	60.00	32.0	50.0	22.0	94.1	99.5	55.0	8.00	160.0/35993	176.0	15.20

*Straight side plates
**Gerade Laschen*

Double pitch transmission chains
Langgliedrige Rollenketten



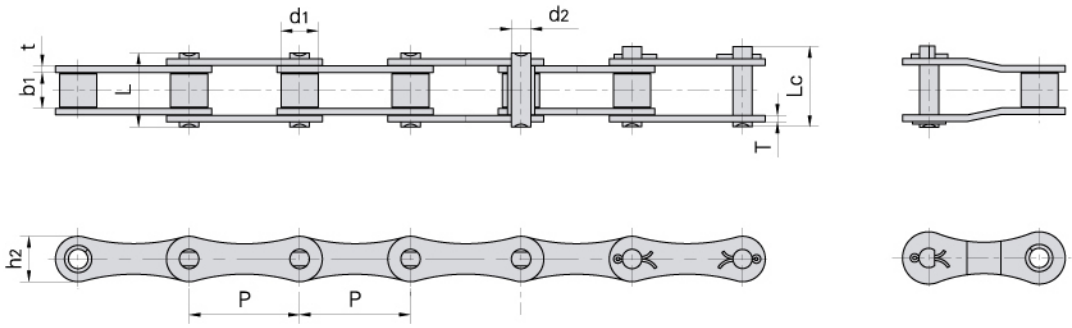

DIN/ISO Chain No. *DIN/ISO Ketten Nr.*	ANSI Chain No. *ANSI Ketten Nr.*	Pitch *Teilung* P mm	Roller diameter *Rollen-durch-messer* d1 max mm	Width between inner plates *Innere Breite* b1 min mm	Pin diameter *Bolzen-durch-messer* d2 max mm	Pin length *Bolzen-länge* L max mm	Pin length *Bolzen-länge* Lc max mm	Inner plate depth *Innen-laschen-höhe* h2 max mm	Plate thickness *Laschen-dicke* t/T max mm	Ultimate tensile strength *Min. Bruchkraft* Q min kN/LB	Average tensile strength *Durchschn. Bruchkraft* Q0 kN	Weight per meter *Gewicht* q kg/m
208A	2040	25.40	7.95	7.85	3.96	16.6	17.8	12.0	1.50	14.1/3205	16.7	0.42
208B		25.40	8.51	7.75	4.45	16.7	18.2	11.8	1.60	18.0/4091	19.4	0.45
210A	2050	31.75	10.16	9.40	5.08	20.7	22.2	15.0	2.03	22.2/5045	28.1	0.73
210B		31.75	10.16	9.65	5.08	19.5	20.9	14.7	1.70	22.4/5091	27.5	0.65
212A	2060	38.10	11.91	12.57	5.94	25.9	27.7	18.0	2.42	31.8/7227	36.8	1.02
212B		38.10	12.07	11.68	5.72	22.5	25.2	16.0	1.85	29.0/6591	32.2	0.76
216A	2080	50.80	15.88	15.75	7.92	32.7	36.5	24.0	3.25	56.7/12886	65.7	1.70
216AH	2080H	50.80	15.88	15.75	7.92	36.2	39.4	24.0	4.00	56.7/12886	70.0	2.17
216B		50.80	15.88	17.02	8.28	36.1	39.1	21.0	4.15/3.1	60.0/13636	72.8	1.75
220A	2100	63.50	19.05	18.90	9.53	40.4	44.7	30.0	4.00	88.5/20114	102.6	2.55
220B		63.50	19.05	19.56	10.19	41.3	45.0	26.4	4.5/3.5	95.0/14773	106.7	2.62
224A	2120	76.20	22.23	25.22	11.10	50.3	54.3	35.7	4.80	127.0/28864	147.3	4.06
224B		76.20	25.40	25.40	14.63	53.4	57.8	33.2	6.0/4.8	160.0/36364	178.0	4.70
228B		88.90	27.94	30.99	15.90	65.1	69.5	36.7	7.5/6.0	200.0/45455	222.0	6.23
232B		101.60	29.21	30.99	17.81	66.0	71.0	42.0	7.0/6.0	250.0/56818	277.5	6.72

Double pitch transmission chain with attachments
Anbauteile für langgliedrige Rollenketten





K-1

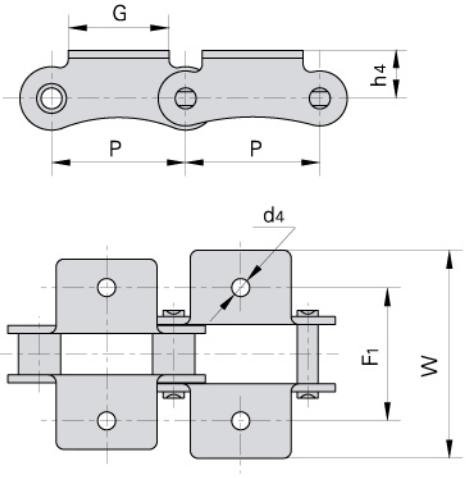

SK-1

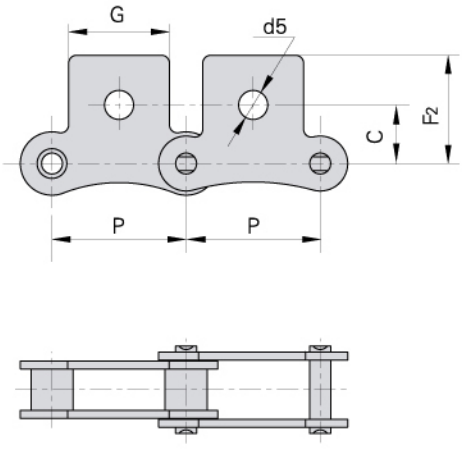

DIN/ISO Chain No. *DIN/ISO Ketten Nr.*	ANSI Chain No. *ANSI Ketten Nr.*	P	G	F_1	W	h_4	d_4	C	F_2	d_5
		mm	mm	mm	mm	mm	mm	mm	mm	mm
208A	2040	25.40	19.1	25.4	39.6	9.1	3.4	11.1	20.5	5.5
210A	2050	31.75	23.8	31.8	49.0	11.1	5.5	14.3	25.0	6.6
212A	2060	38.10	28.6	42.9	67.8	14.7	5.5	17.5	32.9	9.2
216A	2080	50.80	38.1	55.6	87.8	19.1	6.8	22.2	43.5	11.0
220A	2100	63.50	47.6	66.6	107.5	23.4	9.2	28.6	50.4	13.0
224A	2120	76.20	57.2	79.3	121.4	27.8	10.5	33.3	55.5	15.0
208B		25.40	23.2	25.4	39.6	9.1	4.5	11.1	20.5	5.5
210B		31.75	23.8	31.8	49.0	11.1	5.5			
212B		38.10	35.0	38.1	57.0	14.7	6.6			
216B		50.80	44.0	50.8	84.0	19.1	6.6			
220B		63.50	52.0	63.5	104.0	23.4	8.4			
224B		76.20	60.0	76.2	120.0	27.8	10.5			





CONVEYOR CHAINS
FÖRDERKETTEN

Roller chains with straight side plates (A series)
Rollenketten mit geraden Laschen (A Serie)

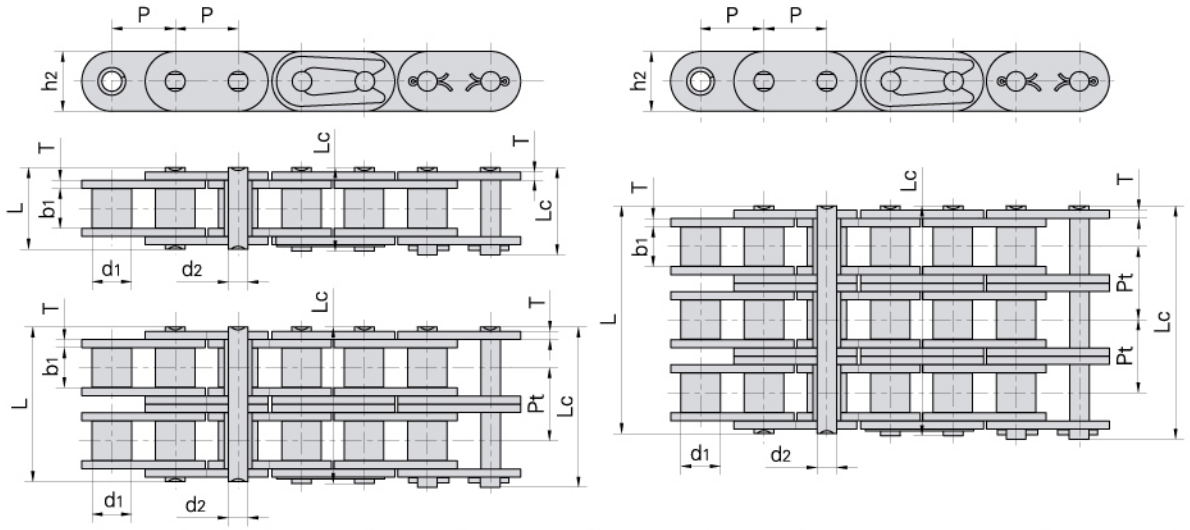

DIN/ISO Chain No.	ANSI Chain No.	Pitch	Roller diameter	Width between inner plates	Pin diameter	Pin length		Inner plate depth	Plate thickness	Transverse pitch	Ultimate tensile strength	Average tensile strength	Weight per meter
Teilung			*Rollen-durch-messer*	*Innere Breite*	*Bolzen-durch-messer*	*Bolzen-länge*		*Innen-laschen-höhe*	*Laschen-dicke*	*Mitten-abstand*	*Min. Bruchkraft*	*Durchschn. Bruchkraft*	*Gewicht*
DIN/ISO Ketten Nr.	*ANSI Ketten Nr.*	P	d_1 max	b_1 min	d_2 max	L max	Lc max	h_2 max	T max	Pt	Q min	Q_0	q
		mm	mm	mm	mm	mm	mm	mm	mm	mm	kN/LB	kN	kg/m
	*C35–1	9.525	5.08	4.77	3.58	13.3	14.3	9.00	1.30	–	7.9/1795	10.8	0.41
C08A–1	C40–1	12.700	7.95	7.85	3.96	16.6	18.8	12.00	1.50	–	14.1/3273	17.5	0.73
C10A–1	C50–1	15.875	10.16	9.40	5.08	20.7	23.3	15.09	2.03	–	22.2/5045	29.4	1.23
C12A–1	C60–1	19.050	11.91	12.57	5.94	25.9	28.3	18.0/18.2	2.42	–	31.8/7227	41.5	1.81/1.83
C16A–1	C80–1	25.400	15.88	15.75	7.92	32.7	36.5	24.00	3.25	–	56.7/12886	69.4	3.09
C20A–1	C100–1	31.750	19.05	18.90	9.53	40.4	44.7	30.00	4.00	–	88.5/20114	109.2	4.56
C24A–1	C120–1	38.100	22.23	25.22	11.10	50.3	54.3	35.70	4.80	–	127.0/28864	156.3	6.86
C28A–1	C140–1	44.450	25.40	25.22	12.70	54.4	59.0	41.00	5.60	–	172.4/39182	212.0	8.49
C32A–1	C160–1	50.800	28.58	31.55	14.27	64.8	69.6	47.80	6.40	–	226.8/51545	278.9	11.50
C08A–2	C40–2	12.700	7.95	7.85	3.96	31.0	33.2	12.00	1.50	14.38	28.2/6409	35.9	1.43
C10A–2	C50–2	15.875	10.16	9.40	5.08	38.9	41.4	15.09	2.03	18.11	44.4/10091	58.1	2.42
C12A–2	C60–2	19.050	11.91	12.57	5.94	48.8	51.1	18.0/18.2	2.42	22.78	63.6/14455	82.1	3.58/3.62
C16A–2	C80–2	25.400	15.88	15.75	7.92	62.7	65.8	24.00	3.25	29.29	113.4/25773	141.8	6.12
C20A–2	C100–2	31.750	19.05	18.90	9.53	76.4	80.5	30.00	4.00	35.76	177.0/40227	219.4	9.08
C24A–2	C120–2	38.100	22.23	25.22	11.10	95.8	99.7	35.70	4.80	45.44	254.0/57727	314.9	13.60
C28A–2	C140–2	44.450	25.40	25.22	12.70	103.3	107.9	41.00	5.60	48.87	344.8/78364	427.5	16.86
C32A–2	C160–2	50.800	28.58	31.55	14.27	123.3	128.1	47.80	6.40	58.55	453.6/103091	562.4	22.90
C08A–3	C40–3	12.700	7.95	7.85	3.96	45.4	47.6	12.00	1.50	14.38	42.3/9614	50.0	2.14
C10A–3	C50–3	15.875	10.16	9.40	5.08	57.0	59.5	15.09	2.03	18.11	66.6/15136	77.8	3.62
C12A–3	C60–3	19.050	11.91	12.57	5.94	71.5	73.9	18.0/18.2	2.42	22.78	95.4/21682	111.1	5.36/5.41
C16A–3	C80–3	25.400	15.88	15.75	7.92	91.7	95.1	24.00	3.25	29.29	170.1/38659	198.4	9.10
C20A–3	C100–3	31.750	19.05	18.90	9.53	112.2	116.3	30.00	4.00	35.76	265.5/60341	309.6	13.60
C24A–3	C120–3	38.100	22.23	25.22	11.10	141.4	145.2	35.70	4.80	45.44	381.0/86591	437.2	20.43
C28A–3	C140–3	44.450	25.40	25.22	12.70	152.2	156.8	41.00	5.60	48.87	517.2/117545	593.3	25.23
C32A–3	C160–3	50.800	28.58	31.55	14.27	181.8	186.6	47.80	6.40	58.55	680.4/154636	780.6	34.19

*Bushing chain: d1 in the table indicate the external diameter of the bushing.
**Buchsenketten: In dieser Tabelle zeigt d1 den Außendurchmesser der Buchsen.*

Roller chains with straight side plates (B series)
Rollenketten mit geraden Laschen (B Serie)

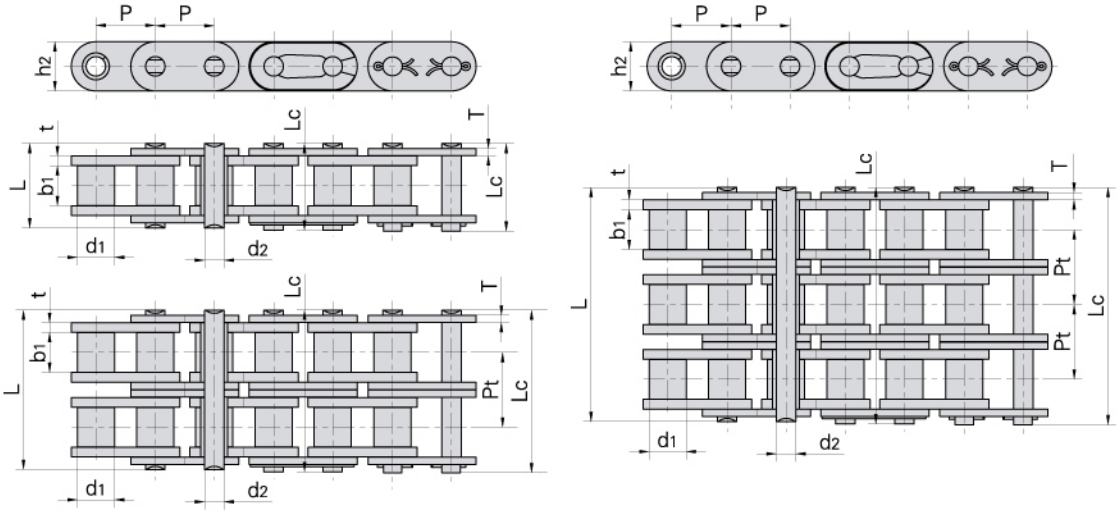

DIN/ISO Chain No. / DIN/ISO Ketten Nr.	Pitch / Teilung	Roller diameter / Rollen-durchmesser	Width between inner plates / Innere Breite	Pin diameter / Bolzen-durchmesser	Pin length / Bolzenlänge		Inner plate depth / Innenlaschenhöhe	Plate thickness / Laschendicke	Transverse pitch / Mittenabstand	Ultimate tensile strength / Min. Bruchkraft	Average tensile strength / Durchschn. Bruchkraft	Weight per meter / Gewicht
	P	d1 max	b1 min	d2 max	L max	Lc max	h2 max	t/T max	Pt	Q min	Q0	q
	mm	mm	mm	mm	mm	mm	mm	mm	mm	kN/LB	kN	kg/m
C08B–1	12.700	8.51	7.75	4.45	16.7	18.2	11.8	1.60	–	18.0/4091	19.5	0.80
C10B–1	15.875	10.16	9.65	5.08	19.5	20.9	14.7	1.70	–	22.4/5091	27.9	1.06
C12B–1	19.050	12.07	11.68	5.72	22.5	25.2	16.0	1.85	–	29.0/6591	32.2	1.32
C16B–1	25.400	15.88	17.02	8.28	36.1	39.1	21.0/24.0	4.15/3.1	–	60.0/13636	72.8	3.08/3.49
C20B–1	31.750	19.05	19.56	10.19	41.3	45.0	26.4	4.5/3.5	–	95.0/21591	106.7	4.16
C24B–1	38.100	25.40	25.40	14.63	53.4	57.8	33.2	6.0/4.8	–	160.0/36364	178.0	7.47
C28B–1	44.450	27.94	30.99	15.90	65.1	69.5	36.7	7.5/6.0	–	200.0/45455	222.0	9.90
C32B–1	50.800	29.21	30.99	17.81	66.0	71.0	42.0	7.0/6.0	–	250.0/56818	277.5	10.45
C08B–2	12.700	8.51	7.75	4.45	31.2	32.2	11.8	1.60	13.92	32.0/7273	38.7	1.45
C10B–2	15.875	10.16	9.65	5.08	36.1	37.5	14.7	1.70	16.59	44.5/10114	57.8	2.00
C12B–2	19.050	12.07	11.68	5.72	42.0	44.7	16.0	1.85	19.46	57.8/13136	66.1	2.62
C16B–2	25.400	15.88	17.02	8.28	68.0	71.0	21.0/24.0	4.15/3.1	31.88	106.0/24091	133.0	6.10/6.92
C20B–2	31.750	19.05	19.56	10.19	77.8	81.5	26.4	4.5/3.5	36.45	170.0/38636	211.2	8.23
C24B–2	38.100	25.40	25.40	14.63	101.7	106.2	33.2	6.0/4.8	48.36	280.0/63636	319.2	14.77
C28B–2	44.450	27.94	30.99	15.90	124.6	129.1	36.7	7.5/6.0	59.56	360.0/81818	406.8	19.82
C32B–2	50.800	29.21	30.99	17.81	124.6	129.6	42.0	7.0/6.0	58.55	450.0/102273	508.5	20.94
C08B–3	12.700	8.51	7.75	4.45	45.1	46.1	11.8	1.60	13.92	47.5/10795	57.8	2.10
C10B–3	15.875	10.16	9.65	5.08	52.7	54.1	14.7	1.70	16.59	66.7/15159	84.5	2.87
C12B–3	19.050	12.07	11.68	5.72	61.5	64.2	16.0	1.85	19.46	86.7/19705	101.8	3.89
C16B–3	25.400	15.88	17.02	8.28	99.8	102.9	21.0/24.0	4.15/3.1	31.88	160.0/36364	203.7	9.12/10.34
C20B–3	31.750	19.05	19.56	10.19	114.2	117.9	26.4	4.5/3.5	36.45	250.0/56818	290.0	11.34
C24B–3	38.100	25.40	25.40	14.63	150.1	154.6	33.2	6.0/4.8	48.36	425.0/96591	493.0	22.10
C28B–3	44.450	27.94	30.99	15.90	184.2	188.7	36.7	7.5/6.0	59.56	530.0/120454	609.5	29.64
C32B–3	50.800	29.21	30.99	17.81	183.2	188.2	42.0	7.0/6.0	58.55	670.0/152273	770.5	31.27

Short pitch conveyor chain with attachments
Winkellaschen-Anbauteile für Förderketten





A–1

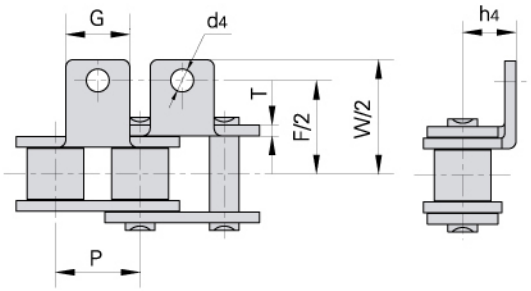

K–1

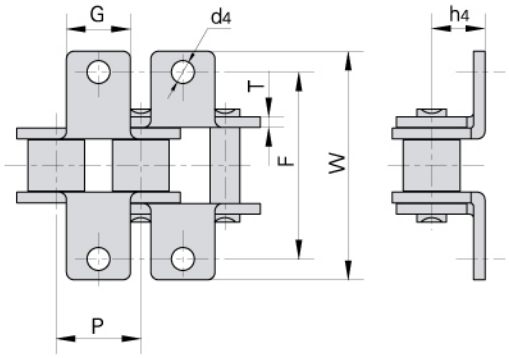

DIN/ISO Chain No. *DIN/ISO Ketten Nr.*	ANSI Chain No. *ANSI Ketten Nr.*	P	G	F	W	T	h4	d4
		mm	mm	mm	mm	mm	mm	mm
04C	25	6.350	5.6	13.80	23.2	0.80	4.30	3.4
06C	35	9.525	7.9	19.00	28.6	1.30	6.35	3.4
08A	40	12.700	9.5	25.40	35.2	1.50	7.90	3.4
085	41	12.700	9.5	24.00	33.4	1.30	6.90	3.6
10A	50	15.875	12.7	31.75	46.2	2.03	10.30	5.5
12A	60	19.050	15.9	38.10	55.6	2.42	11.90	5.5
16A	80	25.400	19.1	50.80	64.8	3.25	15.90	6.8
20A	100	31.750	25.4	63.50	89.8	4.00	19.80	9.2
24A	120	38.100	28.6	76.20	108.5	4.80	23.00	9.8
28A	140	44.450	34.9	88.90	123.0	5.60	28.60	11.4
32A	160	50.800	38.1	101.60	142.8	6.40	31.75	13.1
40A	200	63.500	50.8	127.00	179.0	8.00	42.88	16.3
*06B		9.525	8.0	19.04	27.0	1.30	6.50	3.5
08B		12.700	9.5	25.40	36.4	1.60	8.90	4.5
10B		15.875	14.3	31.75	44.6	1.70	10.31	5.3
12B		19.050	16.0	38.10	52.4	1.85	13.46	6.4
16B		25.400	19.1	50.80	72.6	3.10	15.88	6.4
20B		31.750	35.0	63.50	100.5	3.50	19.80	9.0
24B		38.100	30.0	76.20	108.4	4.80	26.67	10.5
28B		44.450	35.0	88.90	123.0	6.00	28.58	13.1
32B		50.800	38.1	101.60	142.8	6.00	31.75	13.1

*Straight side plates
**Gerade Laschen*

Short pitch conveyor chain with attachments
Planlaschen-Anbauteile für Förderketten



SA–1/M1 one side(*einseitig*)



SK–1/M1 both sides(*beidseitig*)

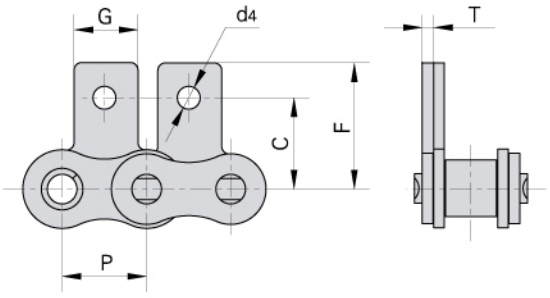

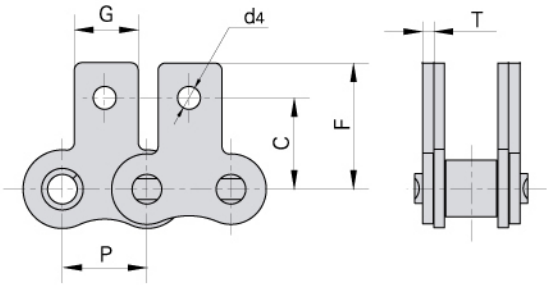

DIN/ISO Chain No. *DIN/ISO Ketten Nr.*	ANSI Chain No. *ANSI Ketten Nr.*	P	G	C	F	T	d4
		mm	mm	mm	mm	mm	mm
04C	25	6.350	5.6	7.95	11.7	0.8	3.4
06C	35	9.525	7.9	9.50	14.55	1.30	3.4
08A	40	12.700	9.5	12.70	19.05	1.50	3.4
085	41	12.700	9.5	11.85	16.55	1.30	3.6
10A	50	15.875	12.7	15.90	25.25	2.03	5.5
12A	60	19.050	15.9	18.30	29.33	2.42	5.5
16A	80	25.400	19.1	24.60	34.70	3.25	6.8
20A	100	31.750	25.4	31.80	43.30	4.00	9.2
24A	120	38.100	28.6	36.50	51.60	4.80	9.8
28A	140	44.450	34.9	44.50	62.00	5.60	11.4
32A	160	50.800	38.1	50.80	69.85	6.40	13.1
40A	200	63.500	50.8	63.50	88.90	8.00	16.3
*06B		9.525	8.0	9.52	13.50	1.30	3.5
08B		12.700	9.5	13.35	18.90	1.60	4.3
10B		15.875	14.3	16.50	22.95	1.70	5.3
12B		19.050	16.0	21.45	28.60	1.85	6.4
16B		25.400	19.1	23.15	34.00	3.10	6.4
20B		31.750	35.0	30.50	45.70	3.50	9.0
24B		38.100	36.0	36.00	61.50	4.80	10.5

*Straight side plates
**Gerade Laschen*

Short pitch conveyor chain with attachments
Winkellaschen-Anbauteile für Förderketten





WA–1 WA–2

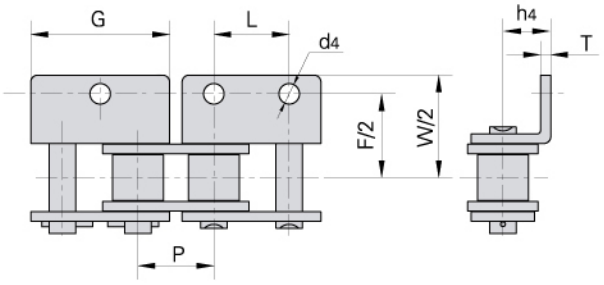

WK–1 WK–2

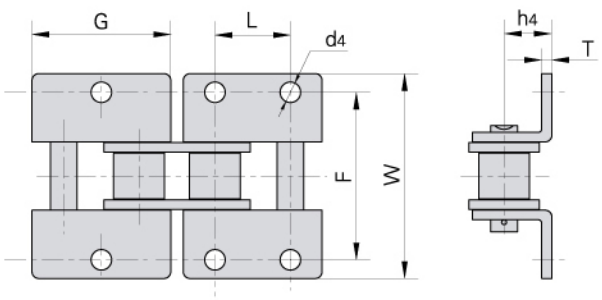

DIN/ISO Chain No. *DIN/ISO Ketten Nr.*	ANSI Chain No. *ANSI Ketten Nr.*	P	G	L	F	W	T	h_4	d_4
		mm	mm	mm	mm	mm	mm	mm	mm
04C	25	6.350	11.41	6.350	13.80	23.2	0.80	4.30	3.40
06C	35	9.525	17.32	9.525	19.00	28.6	1.30	6.35	2.80
08A	40	12.700	23.00	12.700	25.40	35.6	1.50	7.90	3.40
085	41	12.700	22.30	12.700	24.00	35.0	1.30	7.20	4.85
10A	50	15.875	28.80	15.875	31.75	46.8	2.03	10.30	5.50
12A	60	19.050	34.65	19.050	38.10	56.4	2.42	11.90	5.50
16A	80	25.400	45.90	25.400	50.80	73.2	3.25	15.90	6.80
20A	100	31.750	57.65	31.750	63.50	89.8	4.00	19.80	9.20
24A	120	38.100	69.30	38.100	76.20	108.8	4.80	23.00	9.80
28A	140	44.450	80.45	44.450	88.90	123.0	5.60	28.60	11.40
32A	160	50.800	92.00	50.800	101.60	142.8	6.40	31.75	13.10
40A	200	63.500	115.50	63.500	127.00	179.0	8.00	42.88	16.30
*06B		9.525	17.72	9.525	19.04	27.0	1.30	6.50	3.50
08B		12.700	24.00	12.700	25.40	36.4	1.60	8.90	4.30
10B		15.875	29.58	15.875	31.80	44.6	1.70	10.31	5.30
12B		19.050	34.05	19.050	38.10	52.4	1.85	13.46	6.40
16B		25.400	46.40	25.400	50.80	72.6	3.10	15.88	6.40
20B		31.750	58.10	31.750	63.00	100.5	3.50	19.80	9.00
24B		38.100	71.30	38.100	76.20	108.4	4.80	26.67	10.50
28B		44.450	81.10	44.450	88.90	123.0	6.00	28.58	13.10
32B		50.800	92.80	50.800	101.60	142.8	6.00	31.75	13.10

*Straight side plates
**Gerade Laschen*

Short pitch conveyor chain with attachments
Planlaschen-Anbauteile für Förderketten





WSA–1 WSA–2

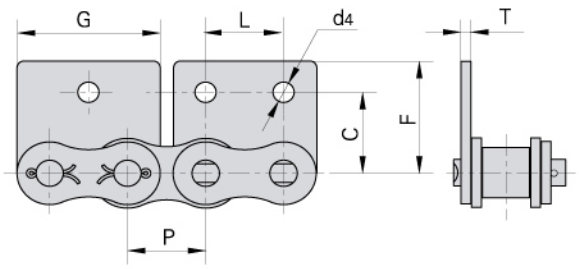

WSK–1 WSK–2

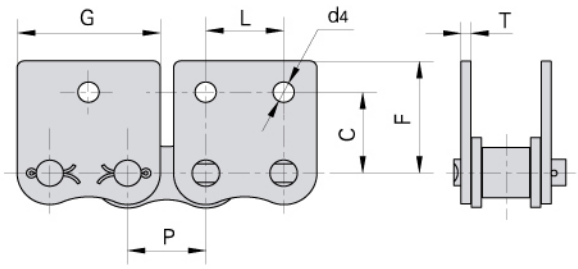

DIN/ISO Chain No. *DIN/ISO Ketten Nr.*	ANSI Chain No. *ANSI Ketten Nr.*	P	G	L	C	F	T	d4
		mm	mm	mm	mm	mm	mm	mm
04C	25	6.350	11.41	6.350	7.95	11.70	0.80	3.4
06C	35	9.525	17.32	9.525	9.50	14.55	1.30	2.8
08A	40	12.700	23.00	12.700	12.70	17.40	1.50	3.4
085	41	12.700	21.20	12.700	11.85	16.55	1.30	3.6
10A	50	15.875	28.80	15.875	15.90	23.05	2.03	5.5
12A	60	19.050	34.65	19.050	18.30	26.86	2.42	5.5
16A	80	25.400	45.90	25.400	24.60	35.45	3.25	6.8
20A	100	31.750	57.65	31.750	31.80	44.00	4.00	9.2
24A	120	38.100	69.30	38.100	36.50	51.60	4.80	9.8
28A	140	44.450	80.45	44.450	44.50	62.00	5.60	11.4
32A	160	50.800	92.00	50.800	50.80	69.85	6.40	13.1
40A	200	63.500	115.5	63.500	63.50	88.90	8.00	16.3
*06B		9.525	17.72	9.525	9.52	13.50	1.30	3.5
08B		12.700	23.30	12.700	13.35	18.90	1.60	4.3
10B		15.875	29.58	15.875	16.50	22.95	1.70	5.3
12B		19.050	34.05	19.050	21.45	28.60	1.85	6.4
16B		25.400	46.40	25.400	23.15	34.00	3.10	6.4
20B		31.750	58.10	31.750	30.50	45.70	3.50	9.0
24B		38.100	71.30	38.100	42.70	61.50	4.80	10.5

*Straight side plates
**Gerade Laschen*

Short pitch conveyor chain with attachments
Winkellaschen-Anbauteile für Förderketten

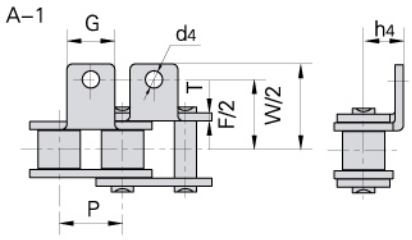

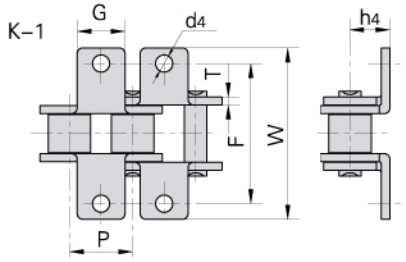

Donghua Chain No. *Donghua Ketten Nr.*	P mm	G mm	F mm	W mm	T mm	h4 mm	d4 mm
25K1F1	6.350	5.60	14.27	21.38	0.80	4.75	3.40
*06BK1F3	9.525	8.00	18.81	26.81	1.15	6.50	3.50
08AA1F1	12.700	9.50	38.50	44.50	1.50	8.20	3.60
08AA1F2	12.700	9.50	25.40	35.20	1.50	7.90	4.85
08AA1F3	12.700	15.88	25.40	35.60	1.50	8.00	4.95
08AA1F6	12.700	9.50	25.40	35.20	1.50	7.90	5.00
08AA1F7	12.700	18.00	37.00	52.00	1.50	8.00	5.20
*C08AA1F1	12.700	10.00	25.40	33.40	1.50	9.10	3.40
08BA1F2	12.700	11.40	38.60	49.60	1.60	8.90	3.50
08BA1F6	12.700	18.00	25.80	37.80	1.60	8.00	4.20
08BA1F8	12.700	11.20	21.85	32.85	2.50	8.90	4.30
08BA1F11	12.700	11.00	25.40	36.40	1.60	8.90	4.30
08BA1F16	12.700	12.30	27.80	42.80	1.60	21.00	5.20
08BA1F18	12.700	9.50	28.30	37.00	1.60	8.00	4.30
08BA1F20	12.700	12.60	22.95	33.95	1.60	10.2	5.00
08AK1F2	12.700	9.50	25.40	35.20	1.50	7.90	4.85
08AK1F4	12.700	9.50	25.39	35.19	1.50	7.90	5.50
08BK1F5	12.700	9.50	29.00	38.70	1.60	7.10	4.50
08BK1F7	12.700	9.50	29.00	39.00	1.60	7.00	4.50
08BK1F9	12.700	9.50	25.40	36.40	1.60	8.90	M4
08BK1F10	12.700	11.00	27.77	38.77	1.55	8.75	4.30
08BK1F14	12.700	11.00	25.57	36.57	1.60	8.90	6.50
08BK1F15	12.700	17.90	27.60	39.60	1.60	8.00	7.10
08BF30	12.700	18.00	27.20	40.00	1.60	8.00	4.30
08BF33	12.700	9.50	27.74	38.80	1.60	8.50	3.10
10AK1F3	15.875	14.29	31.75	46.20	2.03	10.30	5.50
10AK1F5	15.875	20.00	39.00	50.10	2.03	12.50	M5
10AK1F7	15.875	12.70	31.80	46.20	2.03	10.30	M6
10AK1F8	15.875	12.70	31.80	46.20	2.03	10.30	6.50
10AK1F9	15.875	20.00	38.97	50.07	2.03	12.50	5.50

*Straight side plates
**Gerade Laschen*

Short pitch conveyor chain with attachments
Planlaschen-Anbauteile für Förderketten

Donghua Chain No. *Donghua Ketten Nr.*	P	G	F	W	T	h_4	d_4
	mm	mm	mm	mm	mm	mm	mm
10AHK1F1	15.875	12.70	34.00	48.40	2.42	10.30	M5
10BK1F2	15.875	13.00	32.40	45.20	1.70	11.00	6.00
12AA1F7	19.050	15.90	38.10	55.50	2.42	11.90	6.00
12AK1F1	19.050	15.90	40.00	55.60	2.42	11.90	6.20
12AK1F4	19.050	15.90	38.10	55.50	2.42	11.90	M5
12AK1F7	19.050	15.90	38.10	55.60	2.42	11.90	6.00
12AK1F8	19.050	15.90	40.00	55.60	2.42	11.90	6.80
12BA1F1	19.050	16.00	38.10	52.40	1.85	13.46	8.20
12BA1F12	19.050	18.00	35.20	52.70	1.85	12.20	6.40
12BK1F4	19.050	16.00	38.10	52.40	1.85	13.46	6.40
12BK1F5	19.050	18.00	35.44	54.05	1.80	11.60	6.40
12BK1F6	19.050	16.00	35.00	52.40	1.85	13.46	6.40
12BK1F8	19.050	18.00	35.20	50.40	1.85	12.20	6.40
12BK1F9	19.050	16.00	24.80	39.00	1.85	13.46	6.40
12BK1F10	19.050	20.50	40.00	54.50	1.85	12.00	8.50
12BK1F11	19.050	16.00	38.15	52.55	1.85	13.46	10.00
12BFK1	19.050	16.50	40.00	54.80	1.85	12.00	6.60
16AA1F4	25.400	19.10	50.80	64.80	3.25	15.90	6.00
16AK1F3	25.400	30.00	56.30	82.40	3.25	16.00	6.50
16AK1F5	25.400	25.40	44.00	56.00	3.25	15.90	6.00
16AK1F6	25.400	24.00	44.00	56.00	3.25	15.90	6.00
16BK1F3	25.400	19.10	50.80	72.60	3.10	15.88	8.20
16BK1F4	25.400	36.00	54.00	78.60	3.10	16.00	8.20
16BK1F5	25.400	25.00	57.80	83.60	3.10	19.00	9.00
16BK1F10	25.400	24.00	53.58	77.58	3.00	16.30	8.20
16BK1F11	25.400	26.00	58.00	74.60	4.00	18.00	9.00
16BK1F13	25.400	25.00	58.00	84.40	3.10	18.00	9.00
16BK1F15	25.400	25.00	68.00	130.00	3.10	17.00	9.10
16BK1F16	25.400	23.80	58.00	83.80	1.85	17.00	8.40
16BK1F17	25.400	25.00	50.80	70.20	4.15	20.20	9.10
16BK1F19	25.400	24.00	57.15	75.00	4.15	18.00	9.00
20AK1F2	31.750	25.40	53.25	77.15	6.00	19.84	8.20
20AK1F3	31.750	25.40	63.50	87.30	4.00	19.80	8.70
20AHK1F1	31.750	25.40	61.08	87.675	4.80	19.81	10.30
20BK1F2	31.750	26.00	68.00	88.00	4.50	23.50	9.60
24AA1F1	38.100	28.60	76.20	111.60	4.80	23.80	9.80

Short pitch conveyor chain with attachments
Winkellaschen-Anbauteile für Förderketten

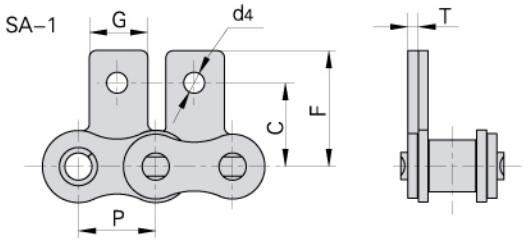

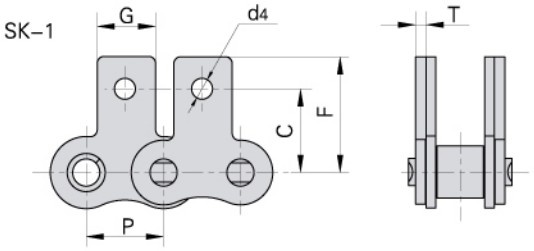

Donghua Chain No. *Donghua Ketten Nr.*	P	G	C	F	T	d4
	mm	mm	mm	mm	mm	mm
35SK1F1	9.525	7.90	9.50	14.55	1.30	4.00
*06BSK1F2	9.525	8.00	9.50	13.50	1.15	3.50
08ASA1F3	12.700	9.60	12.70	17.30	1.50	3.60
08BSA1F1	12.700	18.00	15.00	21.50	1.60	6.30
08BSA1F8	12.700	12.50	14.70	20.30	1.60	4.50
08BSA1F9	12.700	12.50	14.70	20.30	1.60	4.50
08BSK1F2	12.700	11.00	13.40	18.90	1.60	4.30
08BSK1F3	12.700	11.00	14.10	19.50	1.55	4.30
08BSK1F4	12.700	11.00	13.35	18.90	1.60	6.50
08BSK1F5	12.700	9.50	13.35	18.90	1.60	6.30
08BSK1F6	12.700	11.00	14.30	19.30	1.60	4.30
08BSK1F7	12.700	11.00	13.00	20.80	1.60	4.45
10ASA0F2	15.875	28.50	–	93.00	2.03	–
10ASK1F1	15.875	20.00	15.68	22.88	2.03	8.50
10ASK1F3	15.875	12.70	15.25	23.60	2.03	5.30
10BSA1F3	15.875	24.00	16.00	24.20	1.70	5.10
12ASA1F4	19.050	15.90	18.30	29.33	2.42	8.50
12ASK1F1	19.050	15.90	18.30	29.33	2.42	6.10
12BSK1F1	19.050	18.00	18.20	28.10	1.80	6.40
16ASAF1	25.400	19.10	–	34.70	3.25	–
16ASAF2	25.400	19.10	–	34.70	3.25	–
16BSK1F2	25.400	24.00	25.40	37.40	3.00	8.20
16BSK1F3	25.400	19.10	23.15	34.00	3.10	9.00
16AWSK1F3	25.400	45.90	16.00	34.40	3.25	14.52
24BSK1F1	38.100	30.00	42.65	61.70	4.80	10.50

*Straight side plates
**Gerade Laschen*

Short pitch conveyor chain with attachments
Planlaschen-Anbauteile für Förderketten

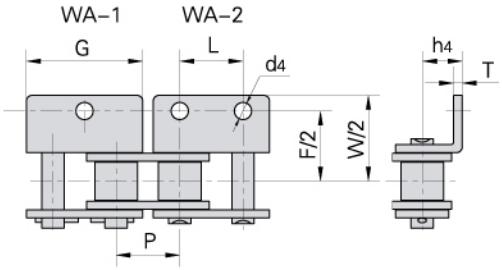

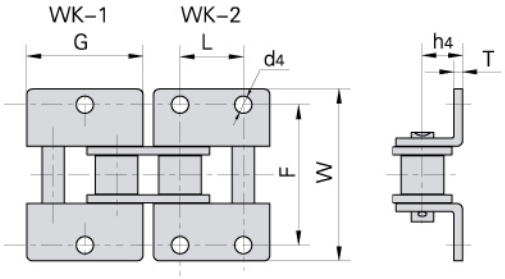

Donghua Chain No. *Donghua Ketten Nr.*	P	G	L	F	W	T	h4	d4
	mm	mm	mm	mm	mm	mm	mm	mm
*06BWK2F1	9.525	17.70	9.525	19.05	28.50	1.30	6.70	4.10
08AWA2F2	12.700	23.00	12.700	25.40	35.60	1.50	7.90	3.60
08BWA2F4	12.700	24.00	12.700	25.40	36.40	1.60	8.90	4.30
08BWA1F1	12.700	23.30	–	27.40	38.80	1.60	8.00	4.30
08BWA1F6	12.700	24.00	–	25.40	38.80	1.60	8.90	6.60
08BWA2F6	12.700	25.00	12.500	26.00	35.60	1.60	8.90	4.50
08BWK2F2	12.700	23.20	12.700	28.40	42.60	3.00	8.50	5.40
08BWK2F3	12.700	23.20	12.700	32.00	43.60	1.60	10.00	4.50
08BWK2F4	12.700	24.00	12.700	25.40	36.40	1.60	8.90	4.30
08BWK2F5	12.700	24.20	12.700	23.95	34.95	1.55	8.75	4.30
428HWK1	12.700	23.30	–	38.00	56.40	2.42	11.00	5.50
10AWK1F1	15.875	28.80	–	31.75	46.00	2.03	10.30	8.20
10AWK1F2	15.875	30.00	–	31.75	46.00	2.03	10.30	5.20
10BWA2F2	15.875	28.36	15.76	30.40	39.80	1.60	10.50	5.20
10BWK2F2	15.875	28.36	15.76	30.40	39.80	1.60	10.50	5.20
10BWK2F3	15.875	29.90	15.88	31.59	45.59	1.60	10.50	5.30
12AWA2F1	19.050	34.65	19.05	38.10	56.40	2.42	11.91	6.35
12AHWK2F1	19.050	34.65	19.05	40.60	59.00	3.25	11.90	5.50
12BWA1F2	19.050	34.05	–	38.10	26.20	1.85	13.46	5.50
12BWA2F2	19.050	34.90	19.00	35.00	50.60	1.85	12.00	6.20
12BWA2F3	19.050	30.00	20.00	37.40	53.00	1.85	12.00	6.10
12BWA2F5	19.050	30.00	20.00	39.60	55.30	1.85	14.00	M6
12BWA2F6	19.050	30.00	20.00	38.60	57.00	1.85	13.46	6.20
12BWK1F1	19.050	34.05	–	38.10	52.40	1.85	13.46	8.50
12BWK2F7	19.050	34.90	19.00	35.00	55.40	1.85	12.20	6.40

*Straight side plates
**Gerade Laschen*

Short pitch conveyor chain with attachments
Winkellaschen-Anbauteile für Förderketten

WA–1 WA–2

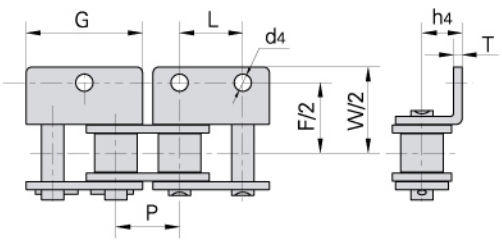

WK–1 WK–2

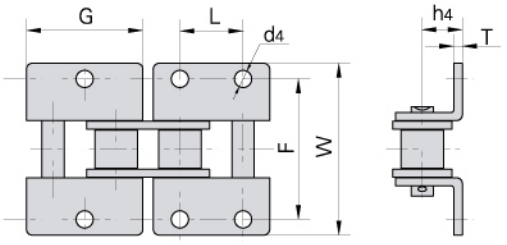

Donghua Chain No. *Donghua Ketten Nr.*	P	G	L	F	W	T	h_4	d_4
	mm	mm	mm	mm	mm	mm	mm	mm
12BWK2F8	19.05	35.60	19.05	38.10	52.40	1.85	13.50	6.6
12BF42WK2	19.05	34.90	19.00	35.20	54.60	1.85	12.20	6.4
16AWK1F1	25.40	45.90	–	50.80	73.20	3.25	15.90	8.0
16AWK1F2	25.40	45.90	–	50.80	73.20	3.25	15.90	12.0
16BWA2F12	25.40	46.40	25.40	50.80	77.80	3.10	15.90	8.2
16BWA2F7	25.40	46.40	25.40	50.80	72.00	4.15	16.00	8.0
16BWK1F	25.40	46.00	–	57.20	78.50	3.10	15.90	8.1
16BWK1F3	25.40	46.40	–	50.80	72.60	3.10	15.88	M6
16BWK1F4	25.40	46.40	–	50.74	72.50	3.10	15.88	8.3
16BWK2F1	25.40	48.00	25.40	58.00	75.90	3.10	18.00	9.0
16BWK2F3	25.40	46.40	25.40	58.08	72.60	3.10	15.88	8.2
16BWK2F5	25.40	46.00	25.40	53.58	77.58	3.00	16.30	8.2
16BWK2F6	25.40	49.00	25.40	50.20	72.60	4.00	19.00	8.2
16BWK2F8	25.40	46.40	25.40	50.80	79.40	4.15	15.88	6.6
16BWK2F10	25.40	46.40	25.40	52.00	72.60	3.10	15.88	6.4
16BWK2F13	25.40	47.00	25.40	58.00	75.60	4.15	18.00	9.0
20BWK2F1	31.75	58.10	31.75	67.94	100.54	3.50	19.80	9.0
28AWK2F1	44.45	82.00	42.00	69.50	99.00	5.60	25.10	10.5
32AWK2F3	50.80	100.00	70.00	100.00	140.00	6.40	31.75	18.0

Short pitch conveyor chain with attachments
Planlaschen-Anbauteile für Förderketten

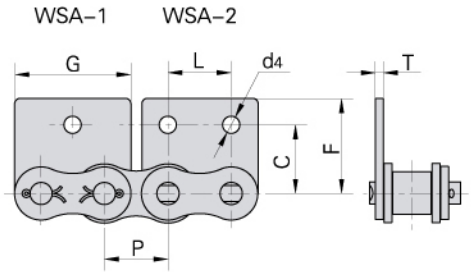

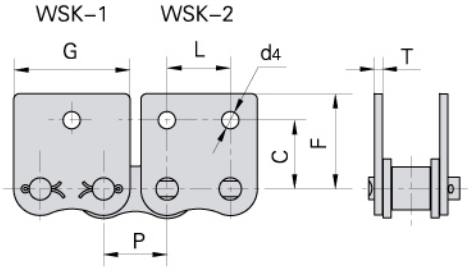

Donghua Chain No. *Donghua Ketten Nr.*	P mm	G mm	L mm	C mm	F mm	T mm	d4 mm
*06BWSA2F1	9.525	17.60	9.50	10.10	14.50	1.30	3.30
*06BWSK2F2	9.525	17.25	9.52	9.50	13.50	1.15	3.50
08BWSA1F2	12.700	24.45	–	13.40	18.90	1.60	4.30
08BWSK2F1	12.700	23.30	12.70	13.35	18.90	1.60	6.10
08BWSK2F2	12.700	24.45	12.70	13.40	18.90	1.60	4.30
08BWSK2F3	12.700	24.20	12.70	14.10	19.50	1.55	4.30
08BWSK2F4	12.700	23.30	12.70	14.10	18.50	1.60	4.30
*C12AWSA1F1	19.050	34.05	–	17.60	25.80	2.42	9.00
12AWSK1F2	19.050	34.65	–	15.75	33.53	2.42	16.13
12BWSK1F1	19.050	35.20	–	20.58	30.30	1.85	6.35
12BWSK2F2	19.050	34.90	19.00	17.80	25.90	1.85	6.20
16AWSK1F4	25.400	45.90	–	16.00	34.40	3.25	15.56
16AWSK1F5	25.400	45.90	–	16.00	34.40	3.25	17.15
16AWSK1F6	25.400	45.90	–	16.00	34.40	3.25	16.00
16AWSK2F1	25.400	45.90	19.10	24.60	35.45	3.25	9.00
16BWSA2F6	25.400	49.00	25.40	25.50	37.60	4.00	8.20
16BWSK1F8	25.400	46.40	–	25.00	37.00	3.10	8.20
16BWSK2F5	25.400	46.00	25.40	25.40	37.50	3.00	8.20
16BWSK2F8	25.400	47.00	25.40	31.10	39.70	4.15	9.00
16BWSK2F9	25.400	47.00	25.40	31.10	39.70	4.15	9.00
16BWSK2F10	25.400	46.50	25.40	28.60	41.50	3.10	9.00
20AWSK1F1	31.750	70.00	–	45.00	70.00	4.00	50.00
20AWSK1F2	31.750	57.65	–	31.80	44.00	4.00	16.00
20AWSK1F3	31.750	57.65	–	31.80	34.98	4.00	16.00
20BWSK2F2	31.750	58.10	31.75	35.00	50.00	3.50	9.00
24BWSK2F1	38.100	71.30	38.10	45.00	55.60	4.80	10.50
32AF5	50.800	93.00	50.80	38.10	56.65	6.40	13.50

*Straight side plates
**Gerade Laschen*

Short pitch conveyor chain with attachments
Winkellaschen-Anbauteile für Förderketten

AA–1

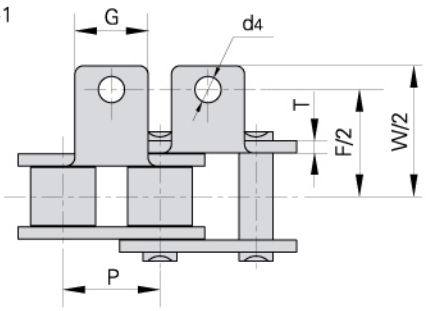

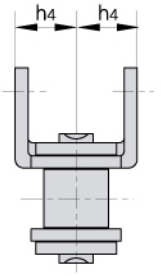

KK–1

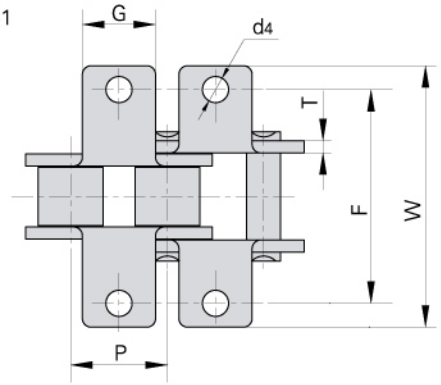

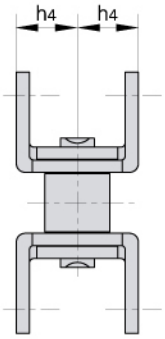

DIN/ISO Chain No. *DIN/ISO Ketten Nr.*	ANSI Chain No. *ANSI Ketten Nr.*	P	G	F	W	T	h4	d4
		mm	mm	mm	mm	mm	mm	mm
08A	40	12.700	9.5	25.40	35.2	1.50	7.90	3.4
10A	50	15.875	12.7	31.75	46.2	2.03	10.30	5.5
12A	60	19.050	15.9	38.10	55.6	2.42	11.90	5.5
16A	80	25.400	19.1	50.80	64.8	3.25	15.90	6.8
20A	100	31.750	25.4	63.50	87.3	4.00	19.80	9.2
24A	120	38.100	28.6	76.20	108.5	4.80	23.00	9.8
*06B		9.525	8.0	19.04	27.0	1.30	6.50	3.5
08B		12.700	9.5	25.40	36.4	1.60	8.90	4.5
10B		15.875	14.3	31.75	44.6	1.70	10.31	5.3
12B		19.050	16.0	38.10	52.4	1.85	13.46	6.4
16B		25.400	19.1	50.80	72.6	3.10	15.88	6.4
20B		31.750	35.0	63.50	100.5	3.50	19.80	9.0
24B		38.100	30.0	76.20	108.4	4.80	26.67	10.5

*Straight side plates
**Gerade Laschen*

Short pitch conveyor chain with attachments
Planlaschen-Anbauteile für Förderketten

SAA–1

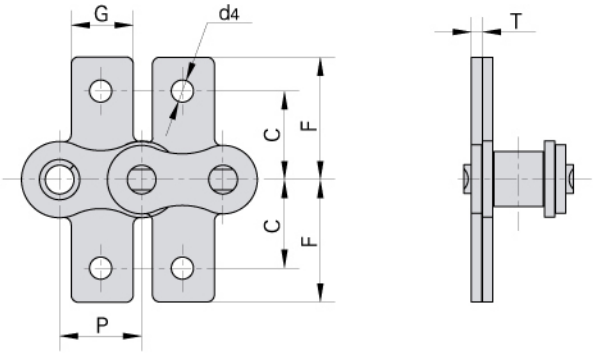

SKK–1

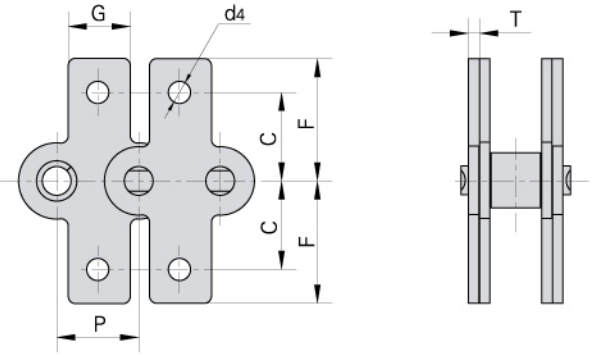

DIN/ISO Chain No. *DIN/ISO Ketten Nr.*	ANSI Chain No. *ANSI Ketten Nr.*	P	G	C	F	T	d4
		mm	mm	mm	mm	mm	mm
08A	40	12.700	9.5	12.70	19.05	1.50	3.4
10A	50	15.875	12.7	15.90	25.25	2.03	5.5
12A	60	19.050	15.9	18.30	29.33	2.42	5.5
16A	80	25.400	19.1	24.60	34.70	3.25	6.8
20A	100	31.750	25.4	31.80	43.30	4.00	9.2
24A	120	38.100	28.6	73.00	103.20	4.80	9.8
*06B		9.525	8.0	9.52	13.50	1.30	3.5
08B		12.700	9.5	13.35	18.90	1.60	4.3
10B		15.875	14.3	16.50	22.95	1.70	5.3
12B		19.050	16.0	21.45	28.60	1.85	6.4
16B		25.400	19.1	23.15	34.00	3.10	6.4
20B		31.750	35.0	30.50	45.70	3.50	9.0
24B		38.100	36.0	85.40	123.0	4.80	10.5

*Straight side plates
**Gerade Laschen*

Conveyor chain with special attachments (A series)
Sonder-Anbauteile für Förderketten (A Serie)

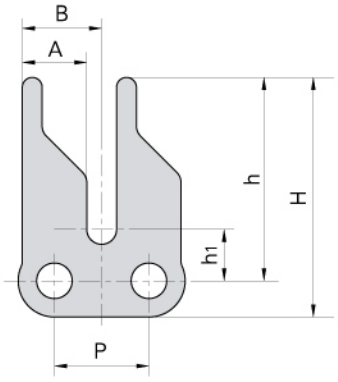

Donghua Chain No. / *Donghua Ketten Nr.*	P	A	B	h1	h	H
	mm	mm	mm	mm	mm	mm
06CF2	9.525	6.5	8.0	5.2	20.5	24.15
06CF7	9.525	6.5	8.0	4.1	20.0	24.45

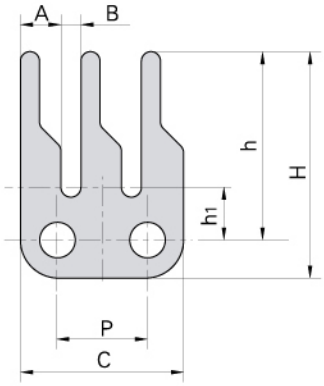

Donghua Chain No. / *Donghua Ketten Nr.*	P	A	B	C	h1	h	H
	mm	mm	mm	mm	mm	mm	mm
06CF5	9.525	4.3	2.0	16.9	5.3	16.0	20.0
06CF8	9.525	4.3	2.0	16.9	5.3	20.0	24.0

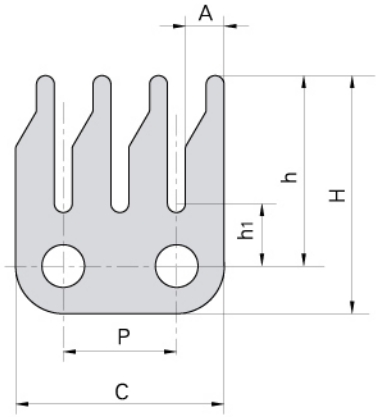

Donghua Chain No. / *Donghua Ketten Nr.*	P	A	C	h1	h	H
	mm	mm	mm	mm	mm	mm
06CF6	9.525	3.25	17.5	5.25	16.0	20.0

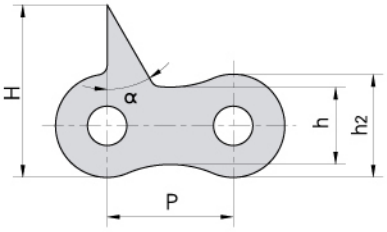

Donghua Chain No. / *Donghua Ketten Nr.*	P	h	h2	H	α
	mm	mm	mm	mm	
08A–D2–F1	12.7	7.8	10.4	17.4	30°
08AF34	12.7	7.8	10.4	17.9	30°

Conveyor chain with special attachments (A series)
Sonder-Anbauteile für Förderketten (A Serie)

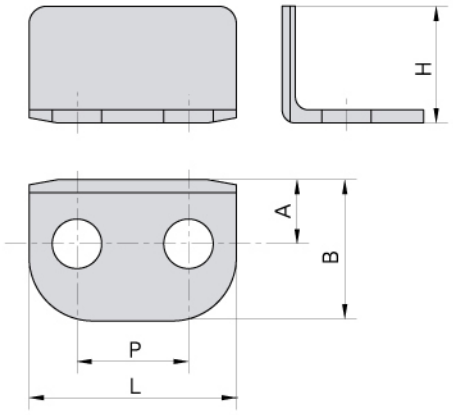

Donghua Chain No. *Donghua Ketten Nr.*	P	L	A	B	H
	mm	mm	mm	mm	mm
RS40F1	12.7	23.6	7.32	16.1	13.3

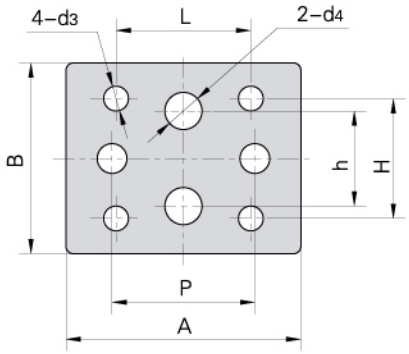

Donghua Chain No. *Donghua Ketten Nr.*	P	A	B	L	h	H	d3	d4
	mm	mm	mm	mm	mm	mm	mm	mm
08AF7	12.7	31.34	25.48	17.45	12.7	15.88	3.3	4.95

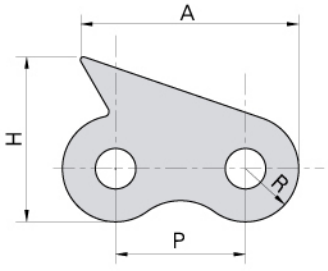

Donghua Chain No. *Donghua Ketten Nr.*	P	R	H	A
	mm	mm	mm	mm
08BF44	12.7	5.3	16.30	23.30
08AF8	12.7	5.2	16.13	21.34

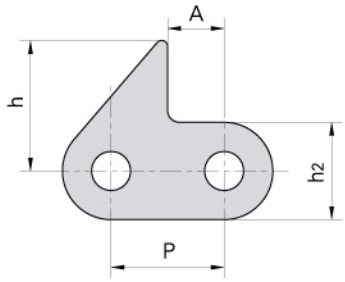

Donghua Chain No. *Donghua Ketten Nr.*	P	h2	h	A
	mm	mm	mm	mm
08AF41	12.7	10.4	11.8	6.35

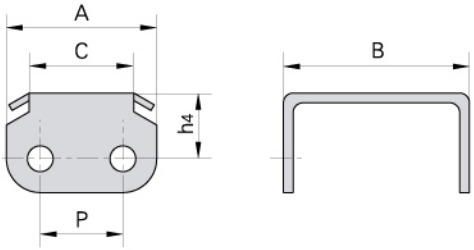

Donghua Chain No. *Donghua Ketten Nr.*	P	A	B	C	h4
	mm	mm	mm	mm	mm
08AF9–2	12.7	23.0	28.8	16.0	10.0

Conveyor chain with special attachments (A series)
Sonder-Anbauteile für Förderketten (A Serie)

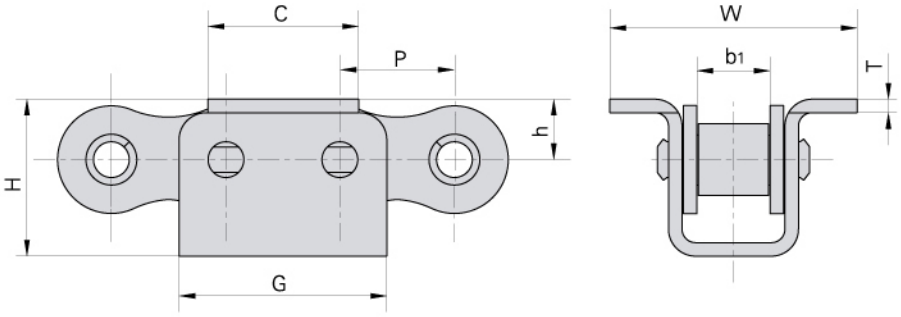

Donghua Chain No. *Donghua Ketten Nr.*	P	b1	C	G	H	h	W	T
	mm	mm	mm	mm	mm	mm	mm	mm
08A–U1F1	12.7	7.85	16.5	24.5	17.4	7.0	27.4	1.6

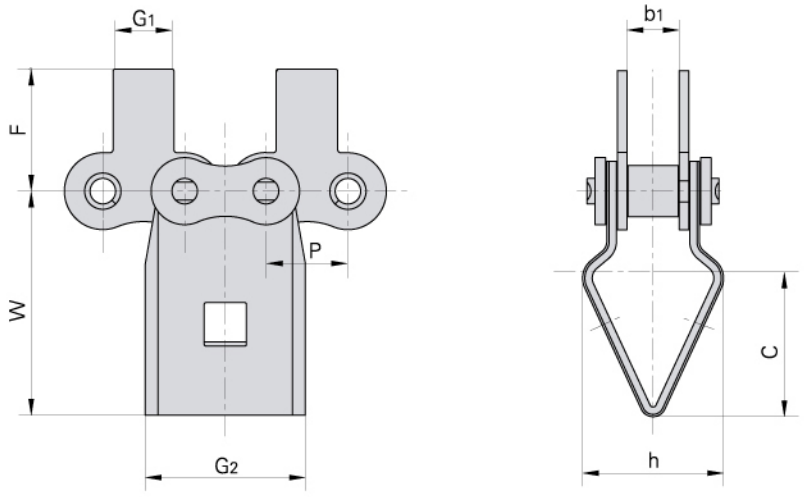

Donghua Chain No. *Donghua Ketten Nr.*	P	b1	G1	G2	F	W	C	h
	mm	mm	mm	mm	mm	mm	mm	mm
08ASAF1	12.7	7.85	9.5	25.0	19.05	35.0	21.5	22.0

Conveyor chain with special attachments (A series)
Sonder-Anbauteile für Förderketten (A Serie)

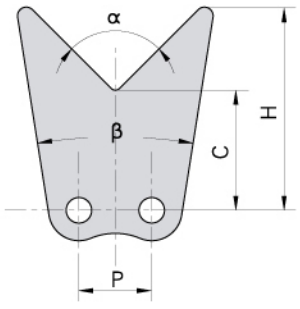

Donghua Chain No. *Donghua Ketten Nr.*	P	C	H	α	β
	mm	mm	mm		
428HJF1	12.7	21.5	36.15	90°	18°
428HJF2	12.7	14.5	33.60	90°	34°

Donghua Chain No. *Donghua Ketten Nr.*	P	h_2	H	S	T
	mm	mm	mm	mm	mm
08AF29	12.700	10.60	15.6	–	1.50
08BF90	12.700	10.60	17.0	0.3	1.60
10AF15	15.875	15.09	17.0	–	2.03
10AF2	15.875	13.00	17.0	0.3	2.03
10AF23	15.875	13.00	20.8	0.3	2.03
10AF48	15.875	13.00	16.9	–	2.03
10BF50	15.875	13.70	17.0	0.3	1.70

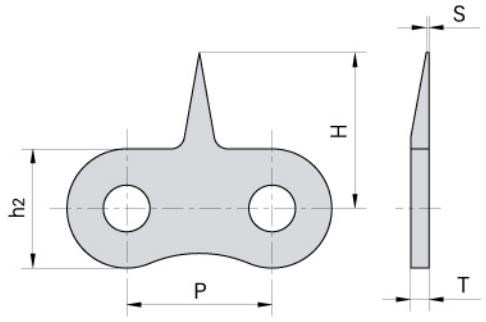

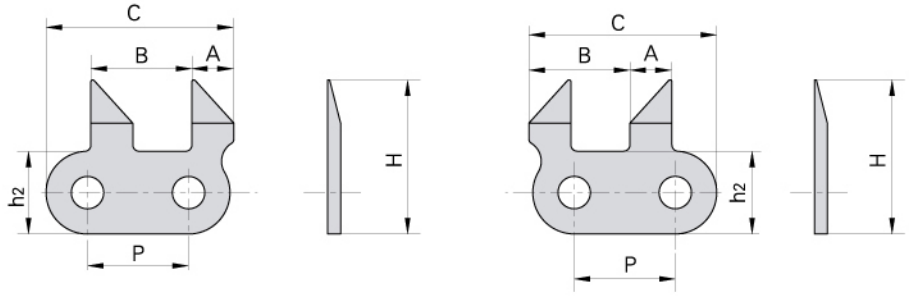

Donghua Chain No. *Donghua Ketten Nr.*	P	A	B	C	h_2	H
	mm	mm	mm	mm	mm	mm
10AF8	15.875	6.6	15.875	29.5	13	24.2

Conveyor chain with special attachments (A series)
Sonder-Anbauteile für Förderketten (A Serie)

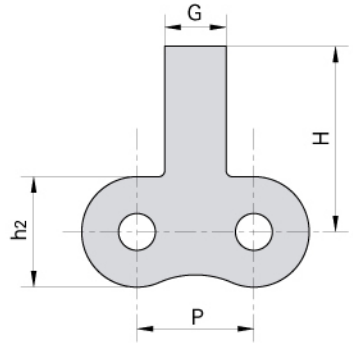

Donghua Chain No. / *Donghua Ketten Nr.*	P	G	H	h2
	mm	mm	mm	mm
12ASA	19.05	10.0	204.0	18.0

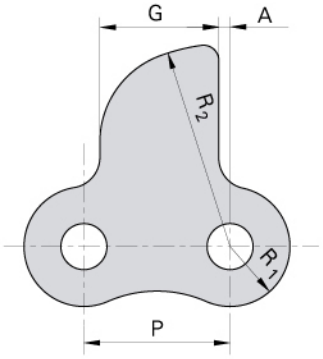

Donghua Chain No. / *Donghua Ketten Nr.*	P	G	A	R1	R2
	mm	mm	mm	mm	mm
12AF7	19.05	15.5	1.47	7.8	26.5

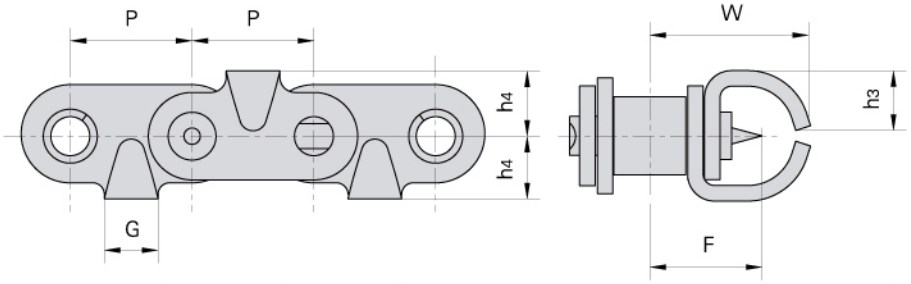

Donghua Chain No. / *Donghua Ketten Nr.*	P	G	F	W	h3	h4
	mm	mm	mm	mm	mm	mm
10AF12	15.875	7.0	14.55	21.2	7.8	8.5

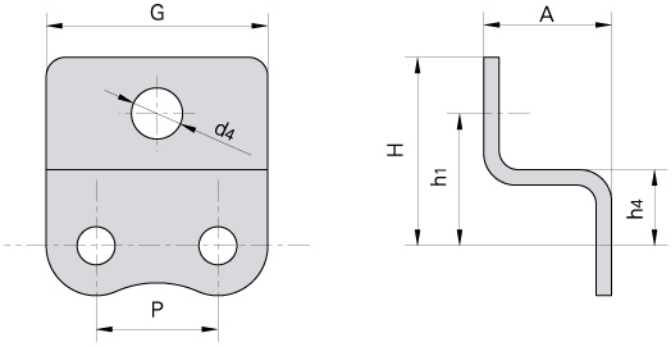

Donghua Chain No. / *Donghua Ketten Nr.*	P	A	G	h1	h4	H	d4
	mm	mm	mm	mm	mm	mm	mm
12AF8	19.05	12.0	37.05	–	12.0	26.50	–
12AF17	19.05	20.0	34.65	20.69	11.9	29.48	8

Conveyor chain with special attachments (A series)
Sonder-Anbauteile für Förderketten (A Serie)

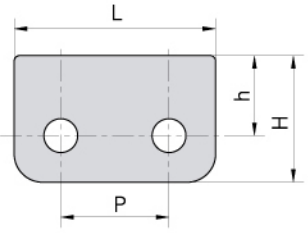

Donghua Chain No. / *Donghua Ketten Nr.*	P	h	H	L
	mm	mm	mm	mm
C60TS	19.05	14.1	22.3	35.45

Donghua Chain No. / *Donghua Ketten Nr.*	P	h_2	H	α
	mm	mm	mm	
16AF5	25.4	11.7	34.6	105°

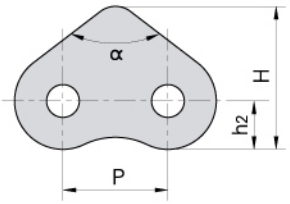

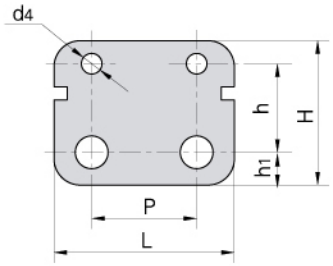

Donghua Chain No. / *Donghua Ketten Nr.*	P	L	h_1	h	H	d_4
	mm	mm	mm	mm	mm	mm
16AF6	25.4	47.63	7.92	21.44	34.93	4.98

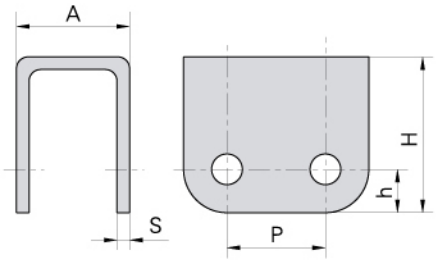

Donghua Chain No. / *Donghua Ketten Nr.*	P	h	H	A	S
	mm	mm	mm	mm	mm
16AF8	25.4	11.2	40.2	29.2	3.1

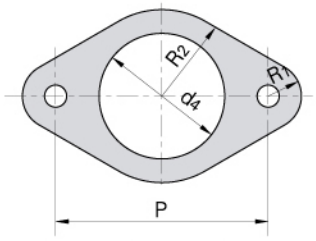

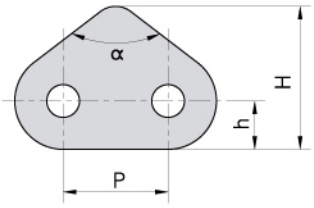

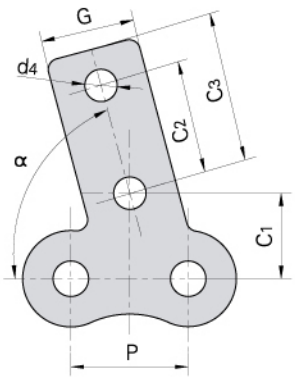

Donghua Chain No. / *Donghua Ketten Nr.*	P	d_4	R_1	R_2
	mm	mm	mm	mm
16AF13	76.2	45.0	11.9	31.0

Donghua Chain No. / *Donghua Ketten Nr.*	P	h	H	α
	mm	mm	mm	
20AF2	31.75	12.5	51.0	74°

Donghua Chain No. / *Donghua Ketten Nr.*	P	G	C_1	C_2	C_3	d_4	α
	mm	mm	mm	mm	mm	mm	
20ASK1F1	31.75	25.4	23.0	30.0	40.0	8.7	75°

Conveyor chain with special attachments (A series)
Sonder-Anbauteile für Förderketten (A Serie)

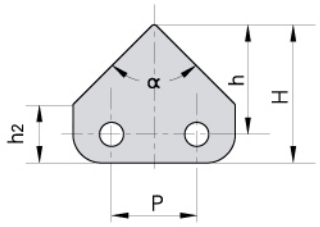

Donghua Chain No. / *Donghua Ketten Nr.*	P	H	h	h2	α
	mm	mm	mm	mm	
41F6	12.7	20.6	16.35	8.7	90°

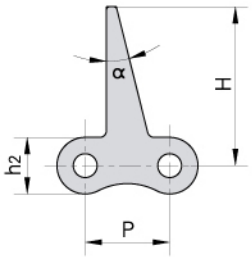

Donghua Chain No. / *Donghua Ketten Nr.*	P	H	h2	α
	mm	mm	mm	
41F5	12.7	23.9	8.51	14°

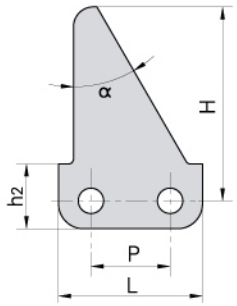

Donghua Chain No. / *Donghua Ketten Nr.*	P	H	h2	L	α
	mm	mm	mm	mm	
10ASA0F1	15.875	38.5	13	29.5	30°

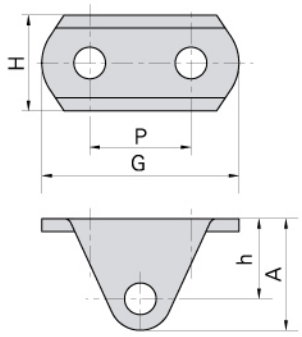

Donghua Chain No. / *Donghua Ketten Nr.*	P	H	h	G	A
	mm	mm	mm	mm	m
16AF21	25.4	24	20.1	49.4	28.1

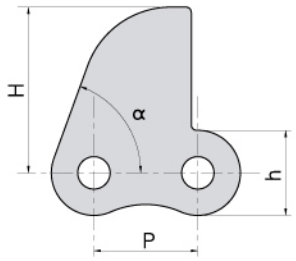

Donghua Chain No. / *Donghua Ketten Nr.*	P	H	h	α
	mm	mm	mm	
12AHF27	19.05	30.2	15.6	70°

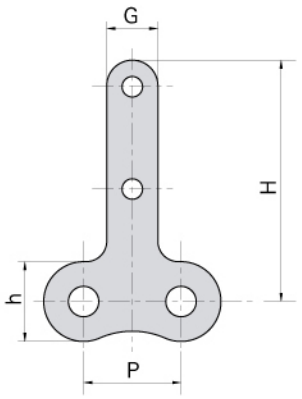

Donghua Chain No. / *Donghua Ketten Nr.*	P	H	h	G
	mm	mm	mm	mm
12AHF30	19.05	47.2	15.6	10

Conveyor chain with special attachments (A series)
Sonder-Anbauteile für Förderketten (A Serie)

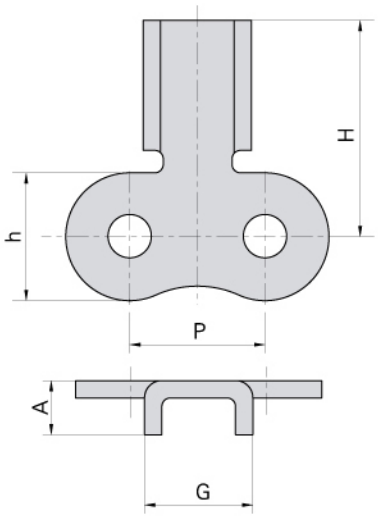

Donghua Chain No. / Donghua Ketten Nr.	P	H	h	A	G
	mm	mm	mm	mm	mm
10AF25	15.875	25.4	15	6.35	12.7

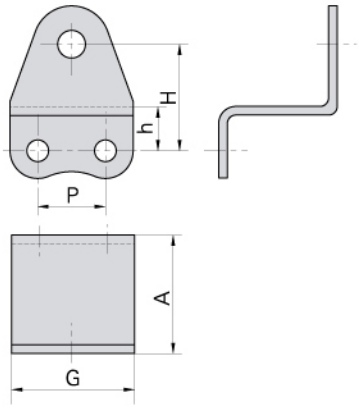

Donghua Chain No. / Donghua Ketten Nr.	P	H	h	A	G
	mm	mm	mm	mm	mm
10AF17	15.875	25	10.3	27.8	28.88

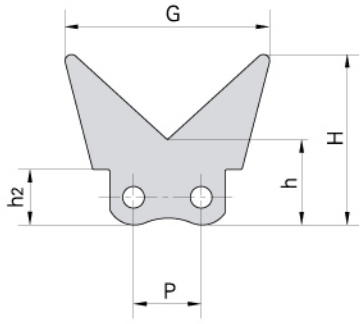

Donghua Chain No. / Donghua Ketten Nr.	P	H	h	h2	G
	mm	mm	mm	mm	mm
50F21	15.875	40	20	13	48

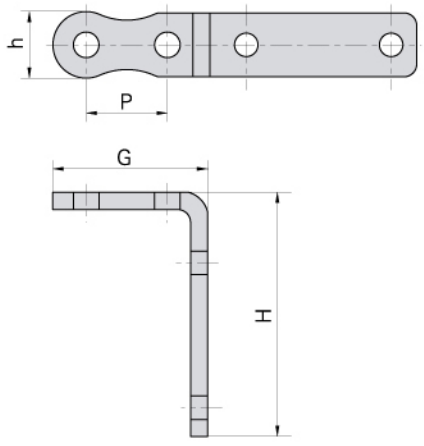

Donghua Chain No. / Donghua Ketten Nr.	P	H	h	G
	mm	mm	mm	mm
12AF44	19.05	55	15.6	36.85

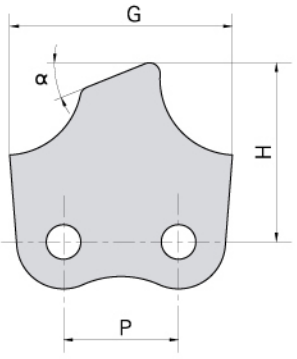

Donghua Chain No. / Donghua Ketten Nr.	P	H	G	α
	mm	mm	mm	
20AF21	31.75	49.46	61.5	22°

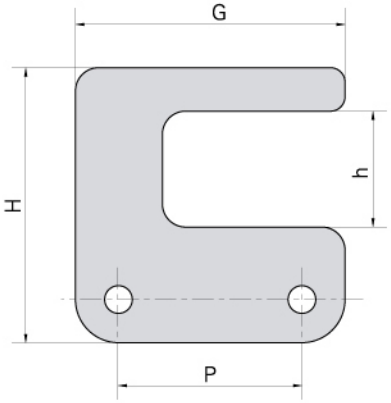

Donghua Chain No. / Donghua Ketten Nr.	P	H	h	G
	mm	mm	mm	mm
20AF18	63.5	40	15	93

Conveyor chain with special attachments (B series)
Sonder-Anbauteile für Förderketten (B Serie)

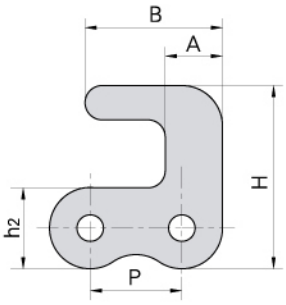

Donghua Chain No. *Donghua Ketten Nr.*	P	h2	H	A	B
	mm	mm	mm	mm	mm
05BF1	8.0	7.1	16.0	5.0	12.0

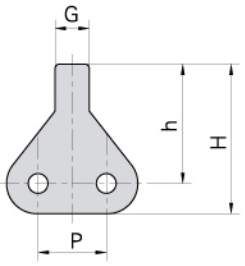

Donghua Chain No. *Donghua Ketten Nr.*	P	H	h	G
	mm	mm	mm	mm
05BF3	8	17.55	14	4

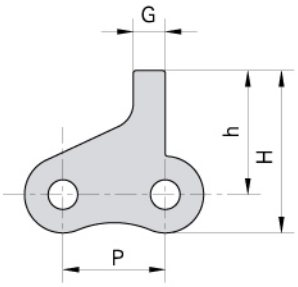

Donghua Chain No. *Donghua Ketten Nr.*	P	H	h	G
	mm	mm	mm	mm
05BF4	8	12.7	9.7	2.5

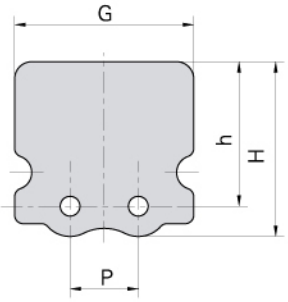

Donghua Chain No. *Donghua Ketten Nr.*	P	H	h	G
	mm	mm	mm	mm
05BF6	8	17.55	16.95	21

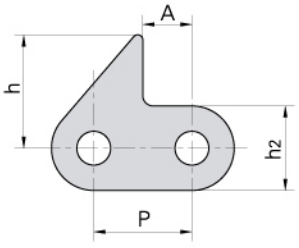

Donghua Chain No. *Donghua Ketten Nr.*	P	h2	h	A
	mm	mm	mm	mm
06BF1	9.525	8.2	11.0	4.76
06BF37	9.525	8.2	10.0	4.76

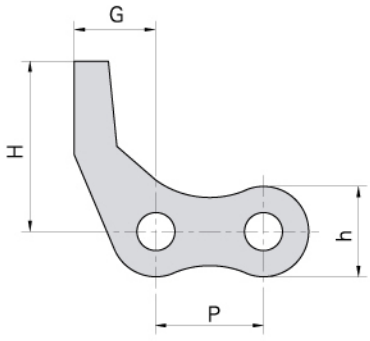

Donghua Chain No. *Donghua Ketten Nr.*	P	H	h	G
	mm	mm	mm	mm
08B–D53	12.7	20	10.6	11.5

Conveyor chain with special attachments (B series)
Sonder-Anbauteile für Förderketten (B Serie)

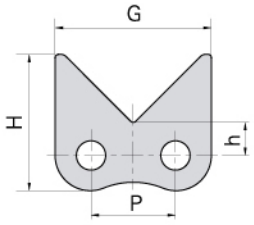

Donghua Chain No. *Donghua Ketten Nr.*	P	H	h	G
	mm	mm	mm	mm
08BF73	12.7	20.5	5	23.5

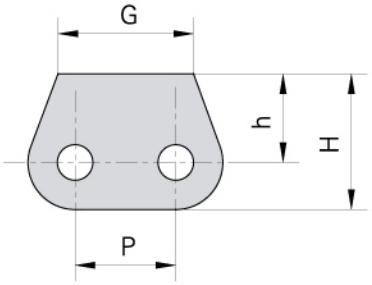

Donghua Chain No. *Donghua Ketten Nr.*	P	H	h	G
	mm	mm	mm	mm
08BSK0F2	12.7	17	11.1	17

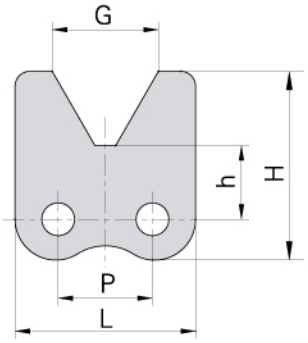

Donghua Chain No. *Donghua Ketten Nr.*	P	H	h	G	L
	mm	mm	mm	mm	mm
08BF61	12.7	25.4	9.9	14.3	24.3

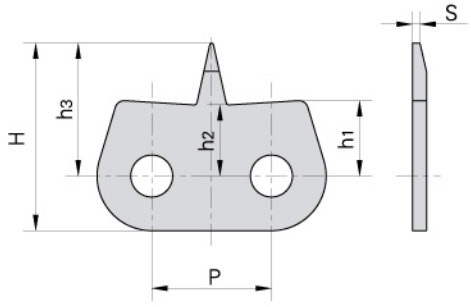

Donghua Chain No. *Donghua Ketten Nr.*	P	h_1	h_2	h_3	H	s
	mm	mm	mm	mm	mm	mm
08BF11	12.7	8.0	7.8	14.1	19.9	0.8

Conveyor chain with special attachments (B series)
Sonder-Anbauteile für Förderketten (B Serie)

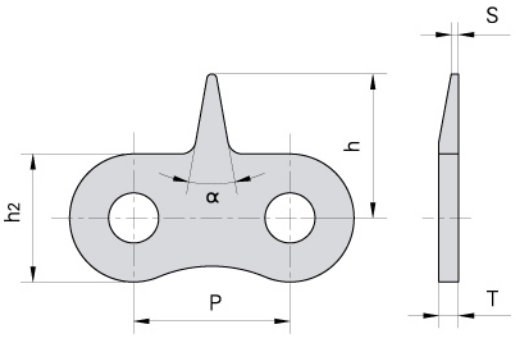

Donghua Chain No. *Donghua Ketten Nr.*	P	h2	h	T	S	α
	mm	mm	mm	mm	mm	
08BF25	12.70	10.6	15.6	1.60	–	30°
08BF29	12.70	10.6	14.5	1.60	0.8	30°
08BF30	12.70	10.6	14.5	1.60	0.3	30°
08BF35	12.70	10.6	21.5	1.60	0.6	30°
08BF67	12.70	10.6	16.1	1.60	0.3	30°
12B–1STCF1	19.05	15.0	19.0	1.85	–	30°

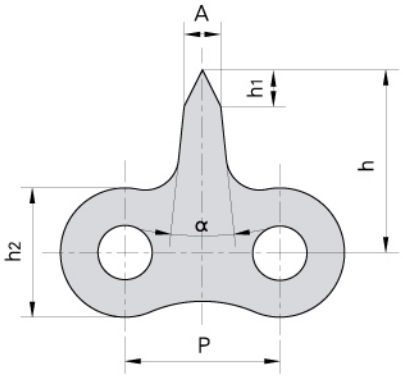

Donghua Chain No. *Donghua Ketten Nr.*	P	h1	h2	h	A	α
	mm	mm	mm	mm	mm	
08BF21	12.7	3.0	10.6	15.0	3.0	12°

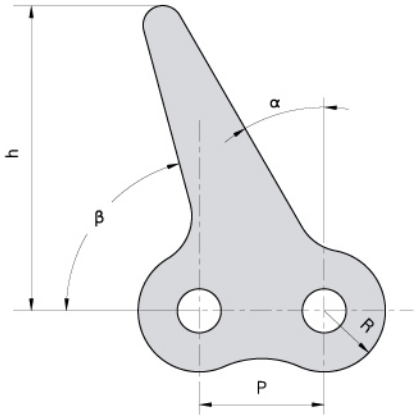

Donghua Chain No. *Donghua Ketten Nr.*	P	R	h	α	β
	mm	mm	mm		
08BF24	12.7	6.2	31.0	30°	75°

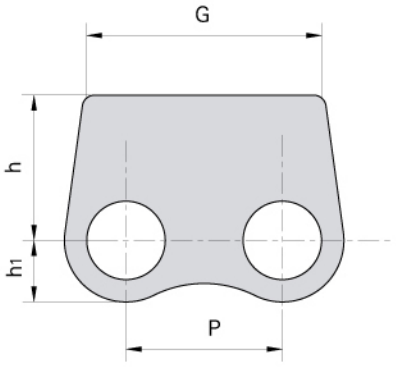

Donghua Chain No. *Donghua Ketten Nr.*	P	h1	h	G
	mm	mm	mm	mm
08BF37	12.7	5.0	11.8	20.0

Conveyor chain with special attachments (B series)
Sonder-Anbauteile für Förderketten (B Serie)

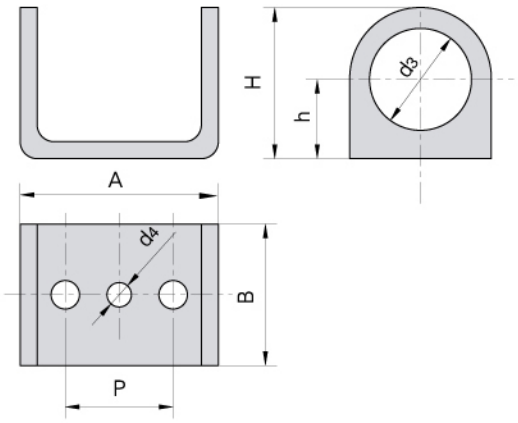

Donghua Chain No. *Donghua Ketten Nr.*	P	h	H	A	B	d3	d4
	mm	mm	mm	mm	mm	mm	mm
12B–K188	19.05	14.0	26.7	35.0	25.0	18.0	4.3

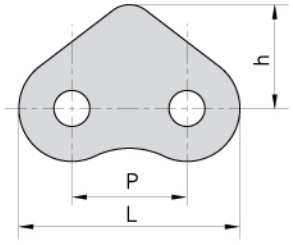

Donghua Chain No. *Donghua Ketten Nr.*	P	L	h
	mm	mm	mm
16BF6	25.4	46.0	30.0

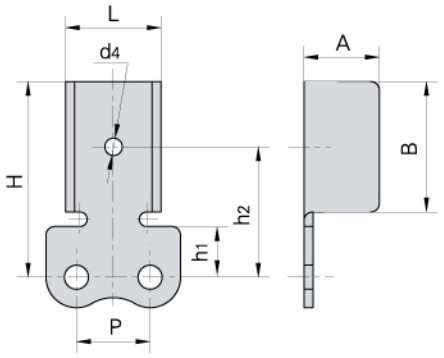

Donghua Chain No. *Donghua Ketten Nr.*	P	h1	h2	H	A	B	d4	L
	mm	mm	mm	mm	mm	mm	mm	mm
16BF11	25.4	24.5	47.5	64.5	36.0	35.0	6.0	52.7

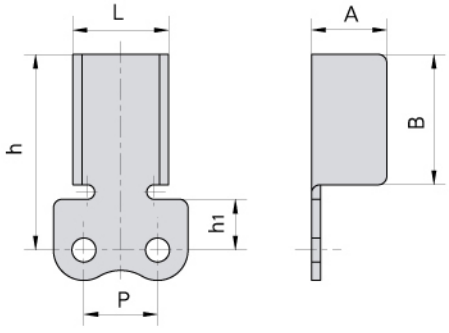

Donghua Chain No. *Donghua Ketten Nr.*	P	h1	h	A	B	L
	mm	mm	mm	mm	mm	mm
20BF2	31.75	30.0	70.0	43.0	35.0	65.15

Conveyor chain with special attachments
Förderketten mit Sonder-Anbauteilen

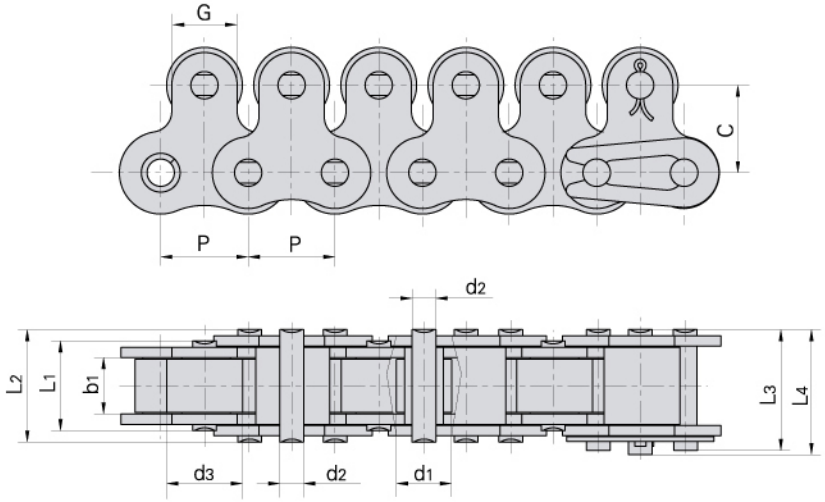

Donghua Chain No. *Donghua Ketten Nr.*	Pitch *Teilung*	Roller diameter *Rollen-durchmesser*		Width between inner plates *Innere Breite*	Pin diameter *Bolzen-durch-messer*	Pin length *Bolzen-länge*				Plate dimension *Laschen-abmessungen*		Ultimate tensile strength *Min. Bruchkraft*	Weight per meter *Gewicht*
	P	d_1 max	d_3 max	b_1 min	d_2 max	L_1 max	L_2 max	L_3 max	L_4 max	G	C	Q min	q
	mm	mm	mm	mm	mm	mm	mm	mm	mm	mm	mm	kN/LB	kg/m
40–1–1LTR	12.700	7.95	11.0	7.85	3.96	13.5	16.6	17.8	18.8	9.5	12.7	14.1/3250	1.44
50–1–1LTR	15.875	10.16	15.0	9.40	5.08	16.5	20.7	22.2	23.3	12.7	15.9	22.2/5405	2.30
60–1–1LTR	19.050	11.91	18.0	12.57	5.94	21.0	25.9	27.7	28.3	15.9	18.3	31.8/7227	3.40
80–1–1LTR	25.400	15.88	24.0	15.75	7.92	26.2	32.7	35.0	36.5	19.1	24.6	56.7/12886	5.90
100–1–1LTR	31.750	19.05	30.0	18.90	9.53	32.3	40.4	44.7	44.7	25.4	31.8	88.5/20114	8.90

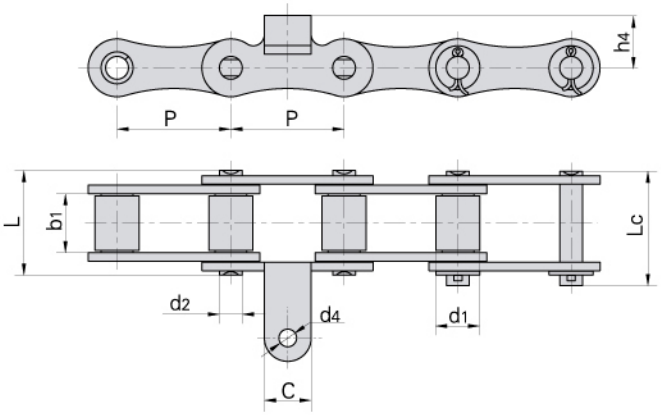

Donghua Chain No. *Donghua Ketten Nr.*	Pitch *Teilung*	Roller diameter *Rollen-durchmesser*	Width between inner plates *Innere Breite*	Pin diameter *Bolzen-durchmesser*	Pin length *Bolzen-länge*		Plate dimension *Lasch-enabmessungen*			Ultimate tensile strength *Min. Bruchkraft*	Average tensile strength *Durchschn. Bruchkraft*	Weight per meter *Gewicht*
	P	d_1 max	b_1 min	d_2 max	L max	Lc max	C	h_4	d_4	Q min	Q_0 min	q
	mm	mm	mm	mm	mm	mm	mm	mm	mm	kN/LB	kN	kg/m
41PF	41.3	16.0	21.1	8.28	38.5	42.2	17.0	19.0	6.4	48.0/10906	52.8	2.57

Short pitch conveyor chain with extended pins
Förderketten mit Mitnehmerbolzen





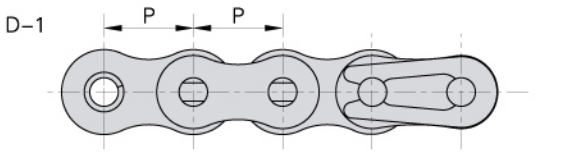

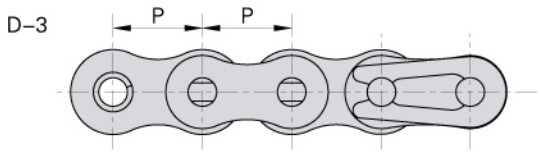

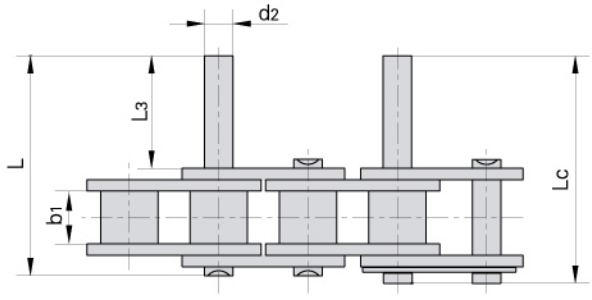

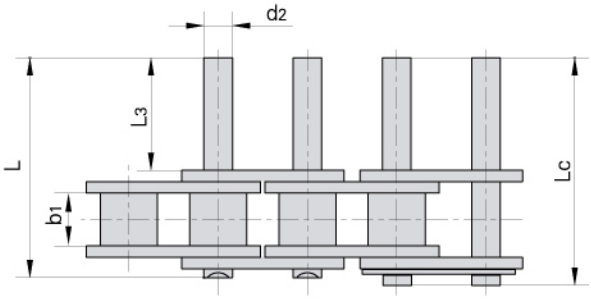

DIN/ISO Chain No. *DIN/ISO Ketten Nr.*	ANSI Chain No. *ANSI Ketten Nr.*	P	b1	d2	L3	L	Lc
		mm	mm	mm	mm	mm	mm
06C	35	9.525	4.77	3.58	9.5	20.8	21.6
08A	40	12.700	7.85	3.96	9.5	25.1	26.2
10A	50	15.875	9.40	5.08	11.9	31.3	33.1
12A	60	19.050	12.57	5.94	14.3	38.6	40.6
16A	80	25.400	15.75	7.92	19.1	50.3	53.3
20A	100	31.750	18.90	9.53	23.8	61.8	66.1
24A	120	38.100	25.22	11.10	28.6	76.4	80.4
28A	140	44.450	25.22	12.70	33.3	84.8	89.4
32A	160	50.800	31.55	14.27	38.1	99.6	104.4
08B		12.700	7.75	4.45	9.5	25.1	26.6
10B		15.875	9.65	5.08	11.9	30.1	31.5
12B		19.050	11.68	5.72	14.3	35.4	37.1
16B		25.400	17.02	8.28	19.1	53.0	54.3
20B		31.750	19.56	10.19	41.0	79.9	83.6
24B		38.100	25.40	14.63	50.7	101.4	105.8
28B		44.450	30.99	15.90	61.9	124.0	128.4
32B		50.800	30.99	17.81	64.8	126.8	131.8

Conveyor chain with special extended pins
Förderketten mit Sonder-Mitnehmerbolzen

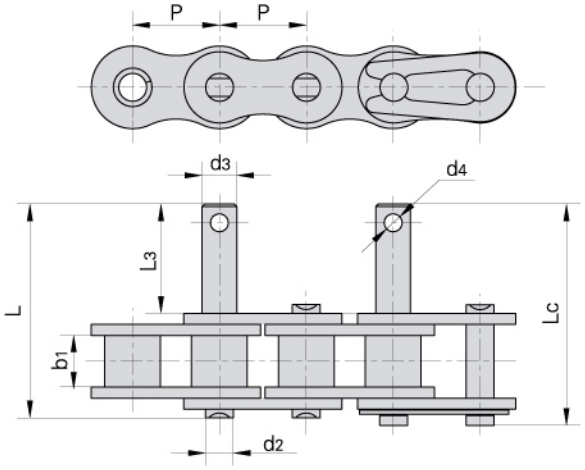

Donhua Chain No. *Donghua Ketten Nr.*	P	b1	d2	d3	L3	L	Lc	d4
	mm	mm	mm	mm	mm	mm	mm	mm
10A–D9	15.875	9.40	5.08	6.35	20.0	39.5	41.1	–
16AF1	25.400	15.88	7.92	9.00	20.0	51.2	54.7	–
08B–D4	12.700	7.75	4.45	6.00	15.0	31.2	32.4	–
08B–D7	12.700	7.75	4.45	6.00	14.0	30.2	31.4	2.6
08BF3	12.700	7.75	4.45	6.00	8.0	24.2	25.4	–
10BF2	15.875	9.65	5.08	6.00	25.0	43.4	44.8	–
10BF3	15.875	9.65	5.08	8.00	25.0	43.4	44.8	–
10B–D7	15.875	9.65	5.08	6.50	40.0	58.5	60.1	–
12B–D5	19.050	11.68	5.72	8.00	40.0	61.4	63.1	–
12B–D6	19.050	11.68	5.72	6.00	20.0	41.1	42.9	–
12B–D7	19.050	11.68	5.72	8.00	25.0	46.4	48.2	–

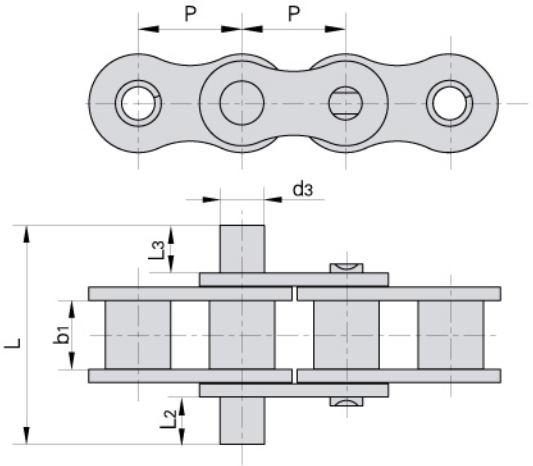

Donhua Chain No. *Donghua Ketten Nr.*	P	b1	d3	L2	L3	L
	mm	mm	mm	mm	mm	mm
12A–D7	19.050	12.57	8.10	8.6	8.6	40.0
06B–D4	9.525	5.72	3.28	3.0	5.0	19.4
08B–D8	12.700	7.75	4.45	10.0	38.0	62.5
08BF7	12.700	7.75	4.45	3.0	5.0	22.8
16BF4	25.400	17.02	8.28	18.0	18.0	68.0

Conveyor chain with special extended pins
Förderketten mit Sonder-Mitnehmerbolzen

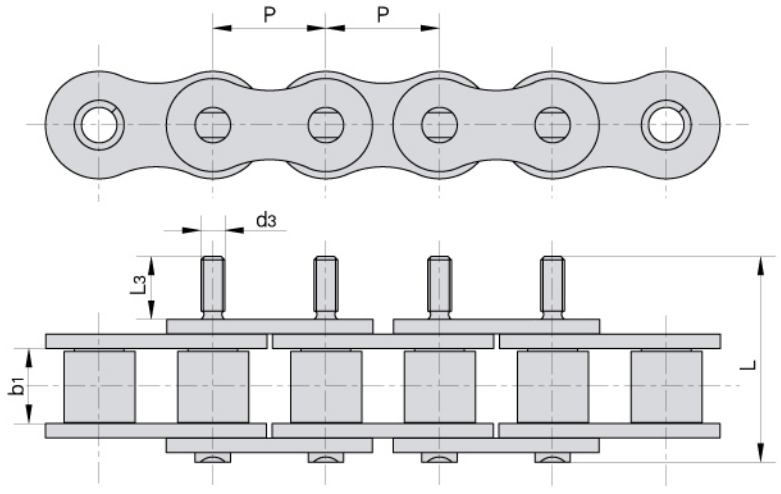

Donghua Chain No. *Donghua Ketten Nr.*	P	b1	d3	L3	L
	mm	mm	mm	mm	mm
12AF19	19.05	12.57	M4	10.0	34.5
12BF13	19.05	11.68	M4	10.0	31.0

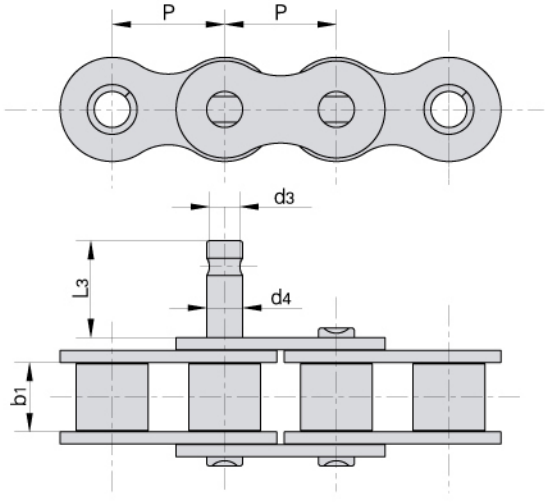

Donghua Chain No. *Donghua Ketten Nr.*	P	b1	d3	d4	L3
	mm	mm	mm	mm	mm
10B–D9	15.875	9.65	4.5	5.08	13.0
10B–D12	15.875	9.65	4.5	5.08	12.0
12B–D8	19.05	11.68	5.15	5.72	13.0

Double pitch conveyor chains
Langgliedrige Förderketten

Small Roller Type *Typ Schonrollen*

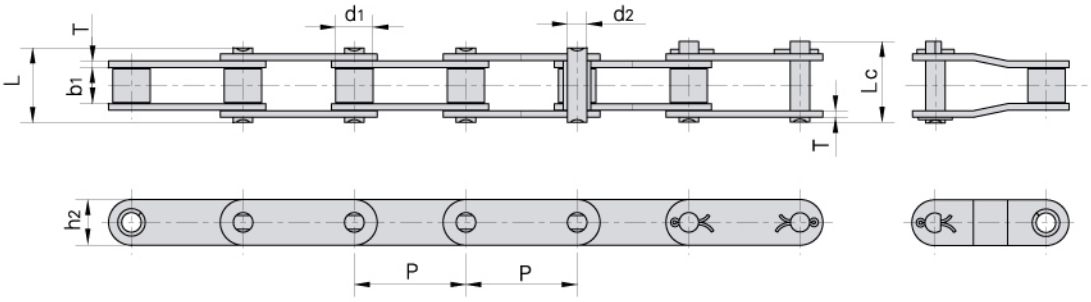

Large Roller Type *Typ Laufrollen*

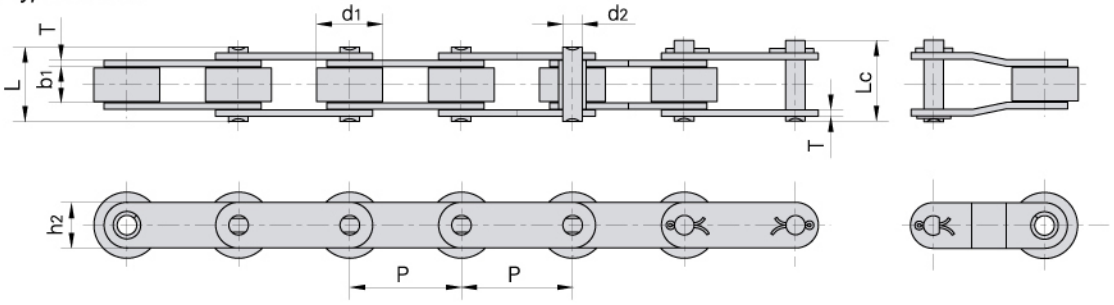

DIN/ISO Chain No. *DIN/ISO Ketten Nr.*	ANSI Chain No. *ANSI Ketten Nr.*	Pitch *Teilung* P mm	Roller diameter *Rollen-durch-messer* d1 max mm	Width between inner plates *Innere Breite* b1 min mm	Pin diameter *Bolzen-durch-messer* d2 max mm	Pin length *Bolzen-länge* L max mm	Pin length *Bolzen-länge* Lc max mm	Inner plate depth *Innen-laschen-höhe* h2 max mm	Plate thickness *Laschen-dicke* T max mm	Ultimate tensile strength *Min. Bruchkraft* Q min kN/LB	Average tensile strength *Durchschn. Bruchkraft* Q0 kN	Weight per meter *Gewicht* q kg/m
C208A C208AL	C2040 C2042	25.40	7.95 15.88	7.85	3.96	16.6	17.8	12.0	1.50	14.1/3205	16.7	0.50 0.84
C208AH	C2040H	25.40	7.95	7.85	3.96	18.8	19.9	12.0	2.03	14.1/3205	17.2	0.65
C208B C208BL		25.40	8.51 15.88	7.75	4.45	16.7	18.2	11.8	1.60	18.0/4091	19.4	0.55 0.89
C210A C210AL	C2050 C2052	31.75	10.16 19.05	9.40	5.08	20.7	22.2	15.0	2.03	22.2/5045	28.1	0.78 1.27
C212A C212AL	C2060 C2062	38.10	11.91 22.23	12.57	5.94	25.9	27.7	18.0	2.42	31.8/7227	36.8	1.12 1.61
C212AH C212AHL	C2060H C2062H	38.10	11.91 22.23	12.57	5.94	29.2	31.6	18.0	3.25	31.8/7227	41.6	1.44 2.07
C216A C216AL	C2080 C2082	50.80	15.88 28.58	15.75	7.92	32.7	36.5	24.0	3.25	56.7/12886	65.7	2.08 3.12
C216AH C216AHL	C2080H C2082H	50.80	15.88 28.58	15.75	7.92	36.2	39.4	24.0	4.00	56.7/12886	70.0	2.54 3.58
C220A C220AL	C2100 C2102	63.50	19.05 39.67	18.90	9.53	40.4	44.7	30.0	4.00	88.5/20114	102.6	3.01 4.83
C220AH C220AHL	C2100H C2102H	63.50	19.05 39.67	18.90	9.53	43.6	46.9	30.0	4.80	88.5/20114	112.4	3.56 5.38
C224A C224AL	C2120 C2122	76.20	22.23 44.45	25.22	11.10	50.3	54.3	35.7	4.80	127.0/28864	147.3	4.66 7.66
C224AH C224AHL	C2120H C2122H	76.20	22.23 44.45	25.22	11.10	53.5	57.5	35.7	5.60	127.0/28864	160.9	5.26 8.26
C232A C232AL	C2160 C2162	101.60	28.58 57.15	31.75	14.27	64.8	69.6	47.8	6.40	226.8/51545	278.9	8.15 13.00
C232AH C232AHL	C2160H C2162H	101.60	28.58 57.15	31.75	14.27	68.2	73.0	47.8	7.20	226.8/51545	285.8	9.06 13.84

Double pitch conveyor chain with attachments
Anbauteile für langgliedrige Förderketten

A–1

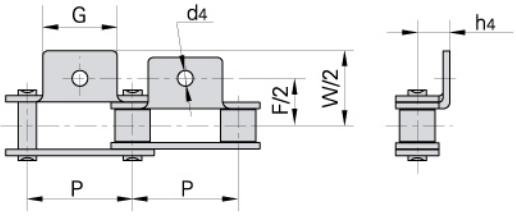

K–1

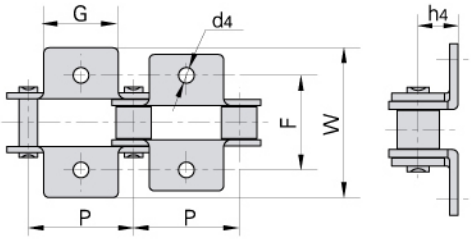

A–2

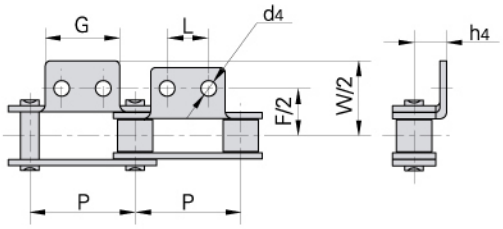

K–2

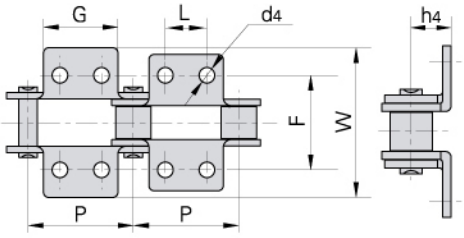

DIN/ISO Chain No. *DIN/ISO Ketten Nr.*	ANSI Chain No. *ANSI Ketten Nr.*	P	G	L	F	W	h4	d4
		mm	mm	mm	mm	mm	mm	mm
C208A C208AL	C2040 C2042	25.40	19.1	9.5	25.4	39.6	9.1	3.4
C208B C208BL		25.40	23.2	12.7	25.4	39.6	9.1	4.5
C210A C210AL	C2050 C2052	31.75	23.8	11.9	31.8	49.0	11.1	5.5
C212A C212AL	C2060 C2062	38.10	28.6	14.3	42.9	67.8	14.7	5.5
C212AH C212AHL	C2060H C2062H	38.10	28.6	14.3	42.9	67.8	14.7	5.5
C216A C216AL	C2080 C2082	50.80	38.1	19.1	55.6	87.8	19.1	6.8
C216AH C216AHL	C2080H C2082H	50.80	38.1	19.1	55.6	87.8	19.1	6.8
C220A C220AL	C2100 C2102	63.50	47.6	23.8	66.6	107.5	23.4	9.2
C220AH C220AHL	C2100H C2102H	63.50	47.6	23.8	66.6	107.5	23.4	9.2
C224A C224AL	C2120 C2122	76.20	57.2	28.6	79.3	121.4	27.8	11.0
C224AH C224AHL	C2120H C2122H	76.20	57.2	28.6	79.3	121.4	27.8	11.0
C232A C232AL	C2160 C2162	101.60	76.2	38.1	104.7	151.6	36.5	13.1
C232AH C232AHL	C2160H C2162H	101.60	76.2	38.1	104.7	151.6	36.5	13.1

Double pitch conveyor chain with attachments
Anbauteile für langgliedrige Förderketten

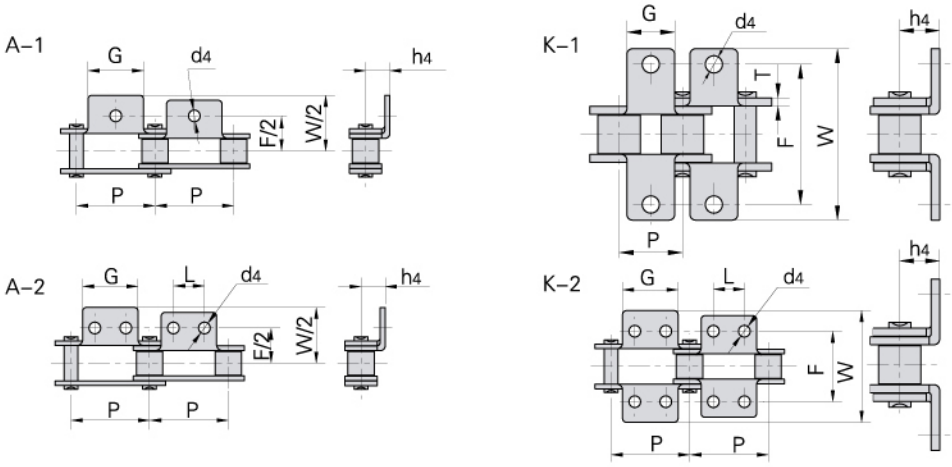

Donghua Chain No. *Donghua Ketten Nr.*	P	G	L	F	W	h4	d4
	mm	mm	mm	mm	mm	mm	mm
C208AF1	25.40	19.0	–	25.7	38.3	8.8	4.1
C2042F1	25.40	19.0	–	25.4	40.0	9.0	5.2
C2040A1F3	25.40	19.0	–	25.4	38.2	19.8	5.3
C2042A1F4	25.40	19.0	–	25.4	39.6	9.1	5.0
C2040A2F1	25.40	19.0	9.00	25.4	38.4	9.0	5.2
C2042HK1F1	25.40	19.0	–	47.0	60.0	9.1	7.0
C2050A1F6	31.75	23.8	–	31.8	49.0	11.4	6.3
C2052A2F1	31.75	19.0	11.90	31.8	49.0	11.1	6.0
C2052A2F2	31.75	19.0	15.88	31.8	49.0	11.1	5.5
C2052A2F3	31.75	25.8	12.70	31.8	49.2	11.1	4.8
C2060K1F1	38.10	28.6	–	42.9	68.0	14.7	8.5
C2062HK1F5	38.10	28.6	–	42.9	67.8	14.7	7.9
C2062A1F13	38.10	30.0	–	70.2	98.0	14.7	8.5
C2062A2F6	38.10	28.6	14.30	42.9	67.8	14.7	6.0
C2062K2F7	38.10	28.6	14.30	42.9	67.8	14.7	6.5
C2060HF3A2	38.10	28.6	14.30	42.9	67.8	14.7	5.2
C2062HF15	38.10	28.6	14.30	42.9	67.8	14.7	M5
C2060HK1F	38.10	28.6	–	42.9	67.8	14.7	8.0
C2062HA1F4	38.10	20.0	–	45.8	65.8	9.0	6.8
C2062HK1F5	38.10	28.6	–	42.9	67.8	14.7	7.9
C2062HA1F7	38.10	28.6	–	42.9	67.8	14.7	5.2
C2060HA1F12	38.10	28.0	–	43.4	61.8	13.9	6.6
C2060HK2F3	38.10	28.6	14.30	42.9	64.8	14.7	5.0
C2062HK2F4	38.10	28.6	14.30	42.9	56.4	14.7	5.2
C2062HK2F5	38.10	28.6	14.30	55.6	76.0	11.1	5.5
C216AF3	50.80	39.0	19.10	59.0	78.5	23.0	7.0
C2082A2F1	50.80	39.0	19.00	58.0	82.0	21.5	7.0
C2082A2F2	50.80	39.0	19.00	58.0	82.0	21.5	10.0
C2082K2F5	50.80	38.1	19.10	120.0	140.0	19.1	6.8
C2080HF	50.80	38.1	19.10	55.6	75.2	17.8	10.0
C2082HK1F5	50.80	38.1	–	55.6	79.6	19.1	8.0
C2082HA1F6	50.80	38.1	–	55.6	77.8	19.1	10.0

Double pitch conveyor chain with attachments
Anbauteile für langgliedrige Förderketten

Donghua Chain No. *Donghua Ketten Nr.*	P	G	L	F	W	h4	d4
	mm	mm	mm	mm	mm	mm	mm
C2082HK1F7	50.8	38.1	–	55.6	79.6	19.10	6.5
C2080HK1F8	50.8	38.1	–	55.6	87.8	19.10	9.0
C2082HK1F9	50.8	38.1	–	55.6	81.5	19.10	M8
C2080HA1F12	50.8	38.1	19.1	55.6	73.0	19.10	8.1
C2080HK1F13	50.8	38.1	–	55.6	80.0	19.10	9.0
C2082HA1F17	50.8	38.1	–	55.6	87.8	19.10	9.5
C2080HSLRA2F5	50.8	38.1	22.2	63.5	87.8	19.05	8.8
C2082HA2F6	50.8	38.1	19.1	55.6	87.8	19.10	8.0
C2100HK1F1	63.5	47.6	–	66.0	92.0	25.00	12.5
C220ALA2F5	63.5	52.0	31.0	66.6	107.4	23.40	9.2
C220AHK1F1	63.5	47.6	–	66.0	92.0	25.00	12.5

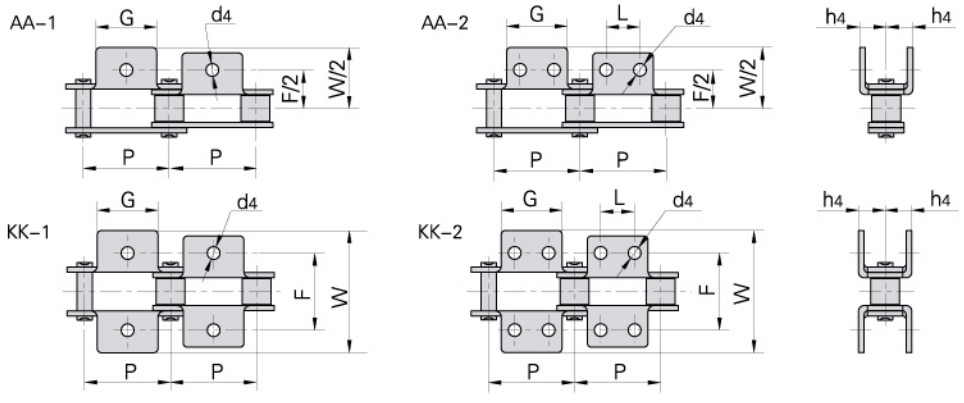

Donghua Chain No. *Donghua Ketten Nr.*	ANSI Chain No. *ANSI Ketten Nr.*	P	G	L	F	W	h4	d4
		mm	mm	mm	mm	mm	mm	mm
C208A C208AL	C2040 C2042	25.40	19.1	9.5	25.4	39.6	9.1	3.4
C208B C208BL		25.40	23.2	12.7	25.4	39.6	9.1	4.5
C210A C210AL	C2050 C2052	31.75	23.8	11.9	31.8	49.0	11.1	5.5
C212A C212AL	C2060 C2062	38.10	28.6	14.3	42.9	67.8	14.7	5.5
C212AH C212AHL	C2060H C2062H	38.10	28.6	14.3	42.9	67.8	14.7	5.5
C216A C216AL	C2080 C2082	50.80	38.1	19.1	55.6	87.8	19.1	6.8
C216AH C216AHL	C2080H C2082H	50.80	38.1	19.1	55.6	87.8	19.1	6.8
2060AA2F1		38.10	38.1	19.0	37.5	57.5	14.8	6.5
C2080K1F4		50.80	38.1	–	80.0	112.0	15.3	8.5
C2082HAA1F1		50.80	25.0	–	78.8	128.8	17.5	8.0
C2082HAA1F2		50.80	25.0	–	77.8	127.8	17.5	12.0

Double pitch conveyor chain with attachments
Anbauteile für langgliedrige Förderketten

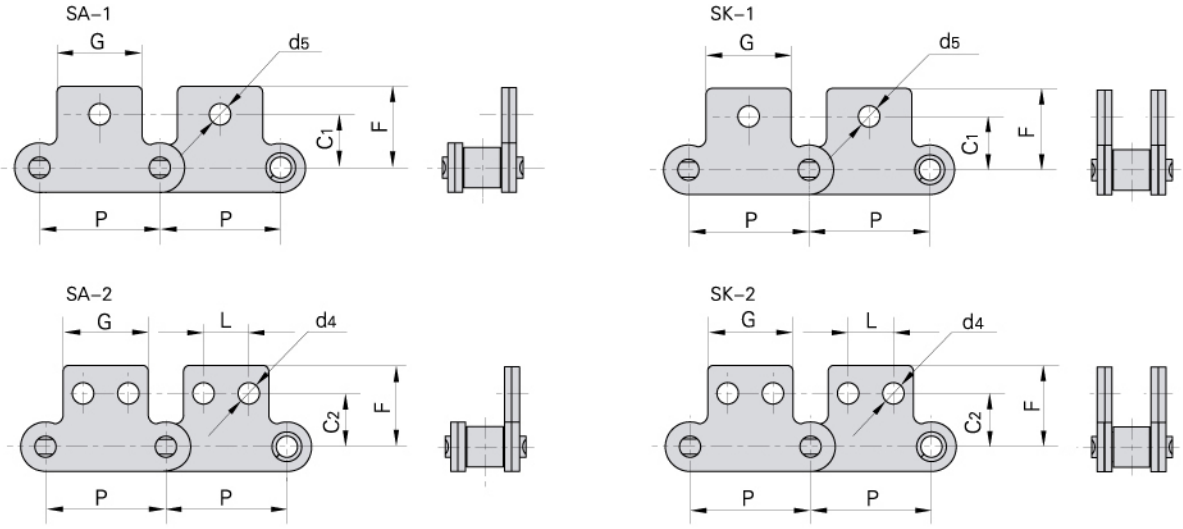

Donghua Chain No. *Donghua Ketten Nr.*	ANSI Chain No. *ANSI Ketten Nr.*	P	G	L	C_1	C_2	F	d_4	d_5
		mm	mm	mm	mm	mm	mm	mm	mm
C208A C208AL	C2040 C2042	25.40	19.1	9.5	11.1	13.5	20.5	3.4	5.50
C208B C208BL		25.40	23.2	12.7	11.1	13.5	20.5	4.5	5.50
C210A C210AL	C2050 C2052	31.75	23.8	11.9	14.3	15.9	25.0	5.5	6.60
C212A C212AL	C2060 C2062	38.10	28.6	14.3	17.5	19.1	32.9	5.5	9.20
C212AH C212AHL	C2060H C2062H	38.10	28.6	14.3	17.5	19.1	32.9	5.5	9.20
C216A C216AL	C2080 C2082	50.80	38.1	19.1	22.2	25.4	43.5	6.6	11.00
C216AH C216AHL	C2080H C2082H	50.80	38.1	19.1	22.2	25.4	43.5	6.6	11.00
C220A C220AL	C2100 C2102	63.50	47.6	23.8	28.6	31.8	50.4	8.4	13.00
C220AH C220AHL	C2100H C2102H	63.50	47.6	23.8	28.6	31.8	50.4	8.4	13.00
C2060SA2F1		38.10	28.6	14.3	–	19.1	26.1	5.5	–
C2062HSK2F1		38.10	29.6	14.3	–	19.1	23.8	5.2	–
C224ALSK2F1		76.20	57.2	28.6	–	37.3	59.9	–	11.00
C2122HSA1F1		76.20	57.2	–	37.3	–	59.9	–	14.30
C224AHLSA2F1		76.20	57.2	28.6	–	37.3	59.9	–	9.53
208BSK1F2		25.40	14.0	–	17.7	–	21.3	–	3.20
208BSK1F3		25.40	13.0	–	14.7	–	26.7	–	3.10
208BSK1F4		25.40	24.2	–	14.3	–	20.5	–	4.20

Double pitch conveyor chain with attachments
Anbauteile für langgliedrige Förderketten

SAA–1

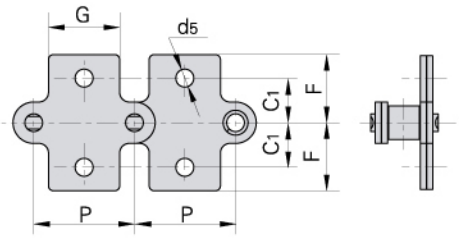

SKK–1

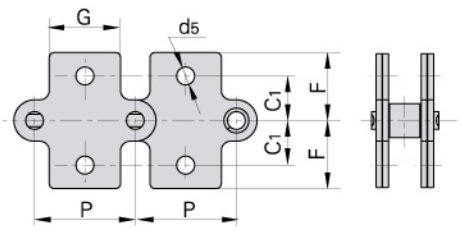

SAA–2

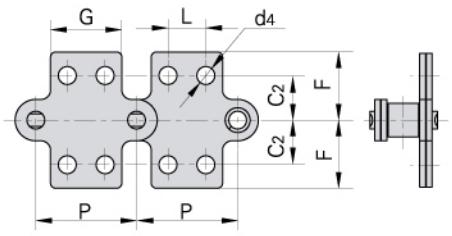

SKK–2

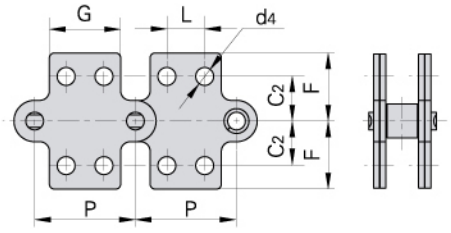

Donghua Chain No. *Donghua Ketten Nr.*	ANSI Chain No. *ANSI Ketten Nr.*	P	G	L	C_1	C_2	F	d_4	d_5
		mm	mm	mm	mm	mm	mm	mm	mm
C208A C208AL	C2040 C2042	25.40	19.1	9.5	11.1	13.5	20.5	3.4	5.5
C208B C208BL		25.40	23.2	12.7	11.1	13.5	20.5	4.5	5.5
C210A C210AL	C2050 C2052	31.75	23.8	11.9	14.3	15.9	25.0	5.5	6.6
C212A C212AL	C2060 C2062	38.10	28.6	14.3	17.5	19.1	32.9	5.5	9.2
C212AH C212AHL	C2060H C2062H	38.10	28.6	14.3	17.5	19.1	32.9	5.5	9.2
C216A C216AL	C2080 C2082	50.80	38.1	19.1	22.2	25.4	43.5	6.6	11.0
C216AH C216AHL	C2080H C2082H	50.80	38.1	19.1	22.2	25.4	43.5	6.6	11.0

Double pitch conveyor chain with attachments
Anbauteile für langgliedrige Förderketten

WA–1

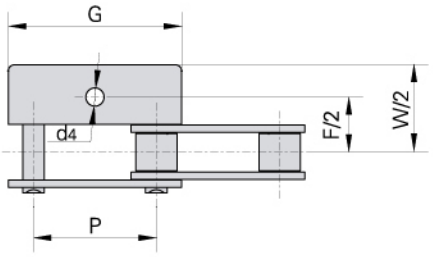

WA–2

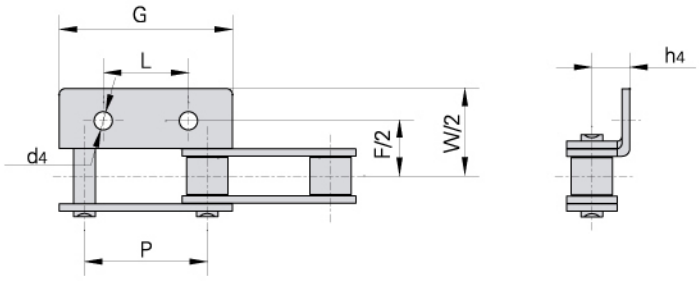

WK–1

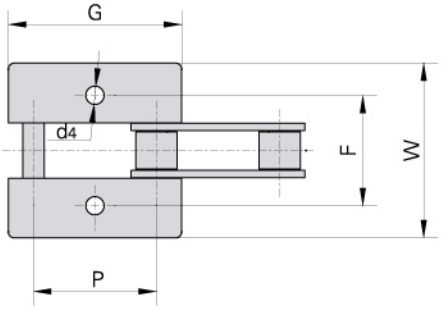

WK–2

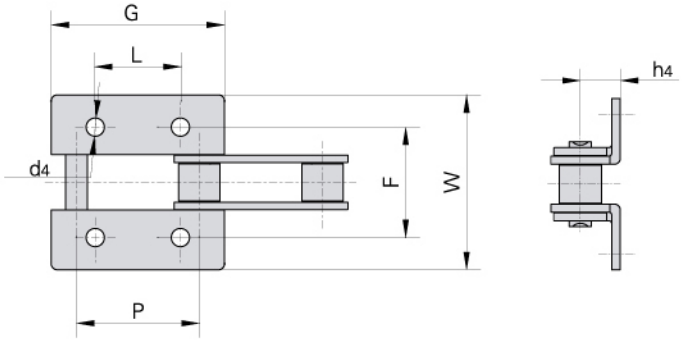

Donghua Chain No. *Donghua Ketten Nr.*	P	G	L	F	W	h4	d4
	mm	mm	mm	mm	mm	mm	mm
C2040K1F2	25.40	37.0	–	62.0	110.0	9.1	7.0
C2042HF1	25.40	37.4	–	42.5	65.5	6.0	7.0
C2052WA1F2	31.75	46.8	–	76.2	95.2	7.5	7.1
C2062WA2F1	38.10	56.1	38.1	42.9	67.8	14.7	6.5
C2062WK2F2	38.10	56.1	38.1	43.0	68.0	14.7	7.8
C2062HWA1F4	38.10	55.6	–	76.2	95.3	8.7	7.1
C2062HWA2	38.10	56.1	14.3	42.9	67.8	14.7	5.5
C2062HWA2F4	38.10	55.6	38.1	76.2	95.3	8.7	7.1
C216ALF5	50.80	74.8	44.3	62.2	88.0	19.1	7.0
C2082F12	50.80	74.8	50.8	55.6	88.0	19.1	8.4
C2082F24	50.80	74.8	56.8	55.6	87.8	19.1	6.8
C2082HF1A2	50.80	74.8	30.0	60.0	84.0	18.0	8.5
C2080HWK2	50.80	74.8	50.8	55.6	87.8	19.1	6.8
C208BK2F	25.40	37.2	12.7	28.0	42.0	8.5	5.5
212BWK2F1	38.10	54.1	19.0	35.2	54.8	12.2	6.4
212BWK2F2	38.10	54.1	19.0	35.0	54.8	12.7	7.0
216BWA2F1	50.80	71.8	25.4	58.0	80.0	17.0	8.4

Double pitch conveyor chain with special attachments
Sonder-Anbauteile für langgliedrige Förderketten

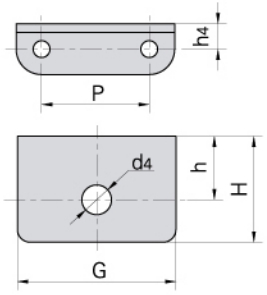

Donghua Chain No. *Donghua Ketten Nr.*	P	h	H	h4	G	d4
	mm	mm	mm	mm	mm	mm
C2042HF1	25.40	15.0	25.0	6.0	37.4	7.0

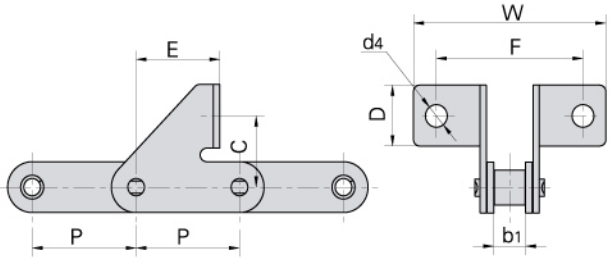

Donghua Chain No. *Donghua Ketten Nr.*	P	b1	F	W	C	D	E	d4
	mm	mm	mm	mm	mm	mm	mm	mm
C2050SD	31.75	9.4	45.0	59.0	21.2	18.0	25.7	6.6

C2052A1F1

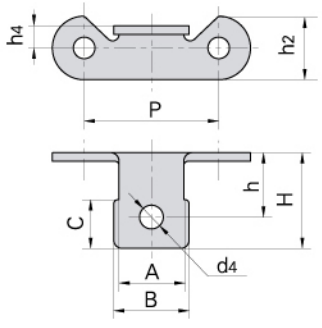

C2062HA1F4

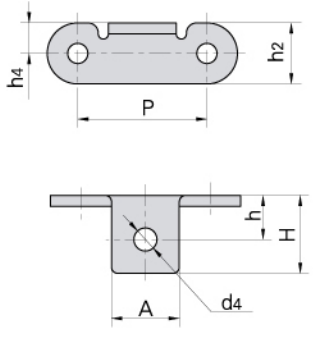

Donghua Chain No. *Donghua Ketten Nr.*	P	A	B	C	h	H	h2	h4	d4
	mm	mm	mm	mm	mm	mm	mm	mm	mm
C2052A1F1	31.75	15.3	17.8	11.5	14.7	22.6	15.0	5.2	6.5
C2062HA1F4	38.10	20.0	–	–	13.0	23.0	18.0	9.0	6.8

Double pitch conveyor chain with special attachments
Sonder-Anbauteile für langgliedrige Förderketten

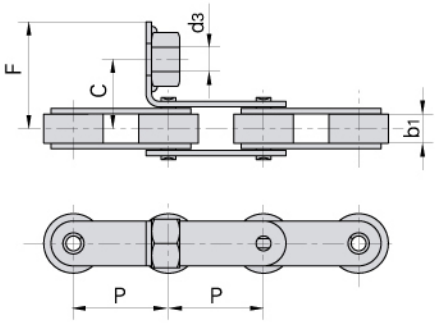

Donghua Chain No. *Donghua Ketten Nr.*	P	b1	C	F	d3
	mm	mm	mm	mm	mm
C2042F4	25.4	7.85	18.5	28.5	M8

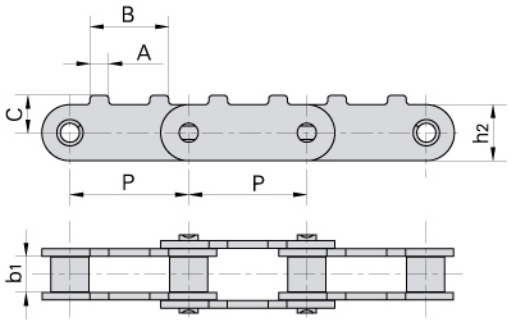

Donghua Chain No. *Donghua Ketten Nr.*	P	b1	h2	A	B	C
	mm	mm	mm	mm	mm	mm
C2050F9	31.75	9.4	15.0	5.0	21.0	10.0

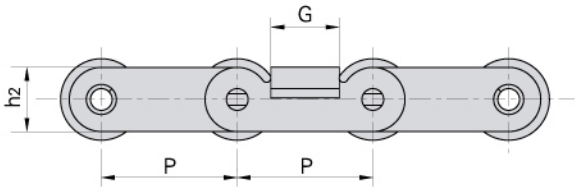

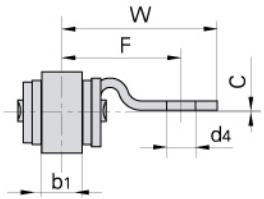

Donghua Chain No. *Donghua Ketten Nr.*	P	b1	h2	G	F	W	d4	C
	mm	mm	mm	mm	mm	mm	mm	mm
C2052F11	31.75	9.4	15.0	16.0	26.6	34.6	6.2	0.5

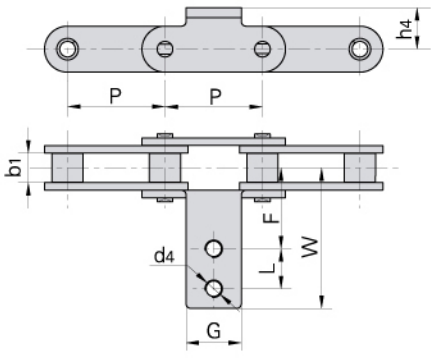

Donghua Chain No. *Donghua Ketten Nr.*	P	b1	G	L	F	W	h4	d4
	mm	mm	mm	mm	mm	mm	mm	mm
C2050HF2	31.75	9.4	18.0	13.0	36.1	56.5	13.5	M5

Double pitch conveyor chain with special attachments
Sonder-Anbauteile für langgliedrige Förderketten

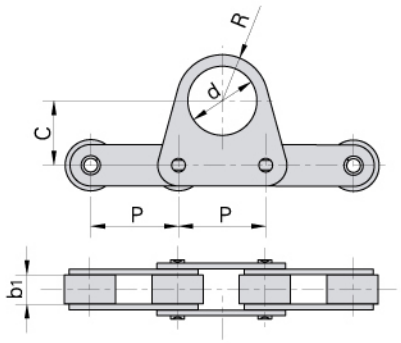

Donghua Chain No. *Donghua Ketten Nr.*	P	b1	C	d	R
	mm	mm	mm	mm	mm
C2062F5	38.1	12.57	28.0	30	20

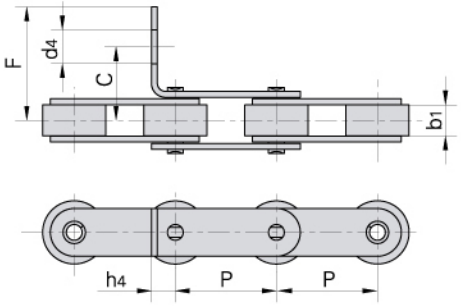

Donghua Chain No. *Donghua Ketten Nr.*	P	b1	C	F	d4	h4
	mm	mm	mm	mm	mm	mm
C2042F8	25.4	7.85	17.75	28	8.5	10
C2062HF13	38.1	12.57	31.9	42.9	6	9.8
C224AF2	76.2	25.22	52.7	77.75	13	26.8

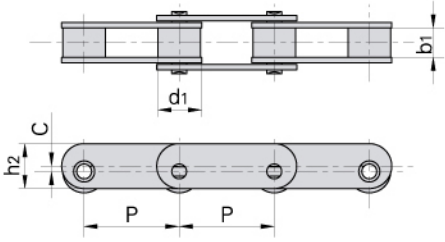

Donghua Chain No. *Donghua Ketten Nr.*	P	b1	C	h2	d1
	mm	mm	mm	mm	mm
C2062F6	38.1	12.57	3.0	23.0	22.23
C2082F8	50.8	15.75	3.5	25.0	28.58

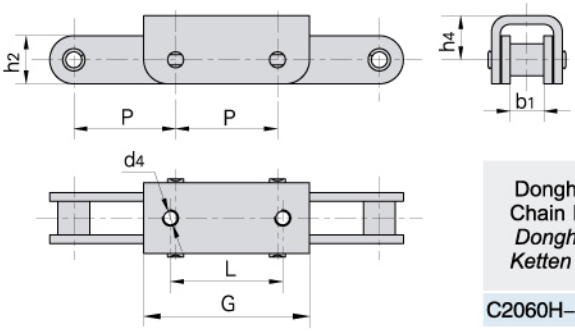

Donghua Chain No. *Donghua Ketten Nr.*	P	b1	L	G	d4	h2	h4
	mm	mm	mm	mm	mm	mm	mm
C2060H–U1F1	38.1	12.57	42.0	62.0	M6	18.0	16.5

Double pitch conveyor chain with special attachments
Sonder-Anbauteile für langgliedrige Förderketten

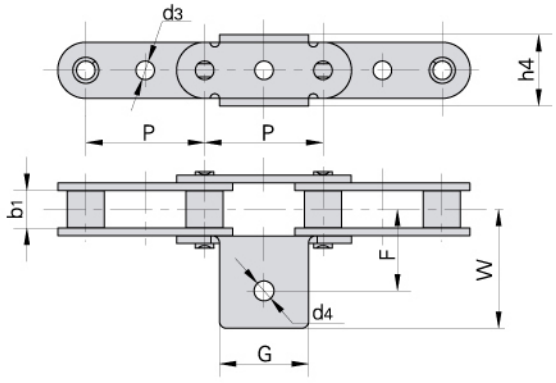

Donghua Chain No. *Donghua Ketten Nr.*	P	b_1	G	F	W	h_4	d_4	d_3
	mm	mm	mm	mm	mm	mm	mm	mm
C2080K1F4	50.8	15.75	38.1	40.0	56.0	30.5	8.5	–
C2080HGF1	50.8	15.75	36.0	38.0	46.0	28.4	6.0	8.1

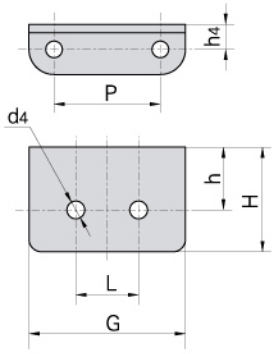

Donghua Chain No. *Donghua Ketten Nr.*	P	h	H	h_4	G	L	d_4
	mm	mm	mm	mm	mm	mm	mm
C2082HF1A2	50.8	17.7	29.7	18.0	74.8	30.0	8.5

Double pitch conveyor chain with special attachments
Sonder-Anbauteile für langgliedrige Förderketten

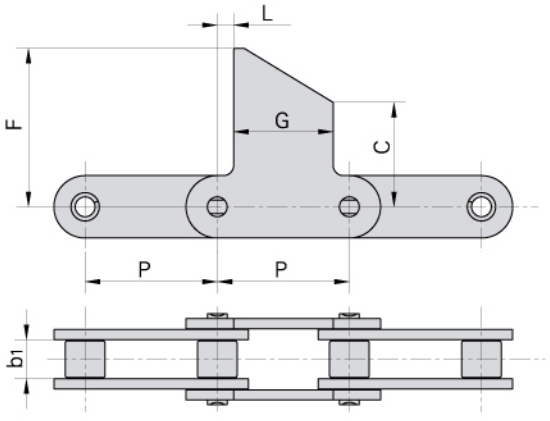

Donghua Chain No. *Donghua Ketten Nr.*	P	b_1	L	G	C	F
	mm	mm	mm	mm	mm	mm
C2100HF4	63.5	18.9	7.9	47.8	50.8	76.2

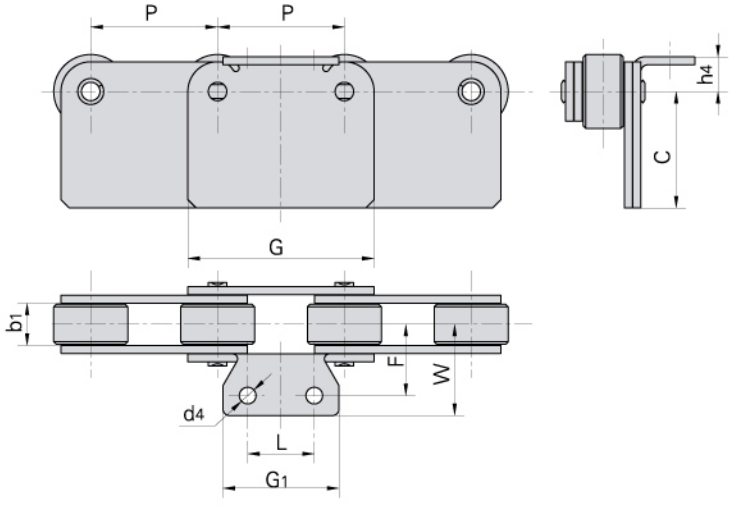

Donghua Chain No. *Donghua Ketten Nr.*	P	b_1	L	G_1	G	h_4	d_4	C	F	W
	mm	mm	mm	mm	mm	mm	mm	mm	mm	mm
C224ALK2F2	76.2	25.22	40.0	70.0	111.9	20.8	10.0	70.0	43.0	55.0

Double pitch conveyor chain with special attachments
Sonder-Anbauteile für langgliedrige Förderketten

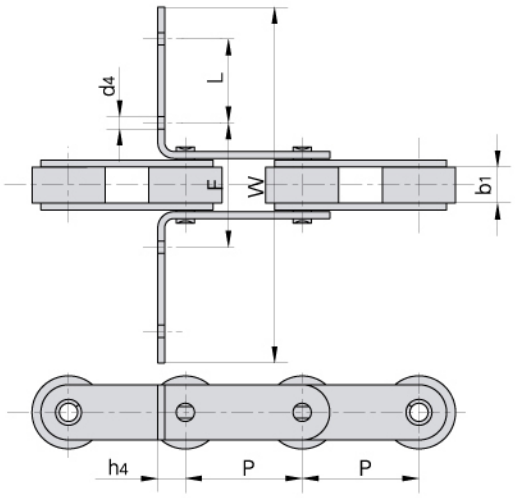

Donghua Chain No. *Donghua Ketten Nr.*	P	b1	L	F	W	h4	d4
	mm	mm	mm	mm	mm	mm	mm
C2080HF6	50.8	15.75	43.0	60.0	160.0	20.45	5.5
C2080HF11	50.8	15.75	30.0	110.0	210.0	19.00	8.2

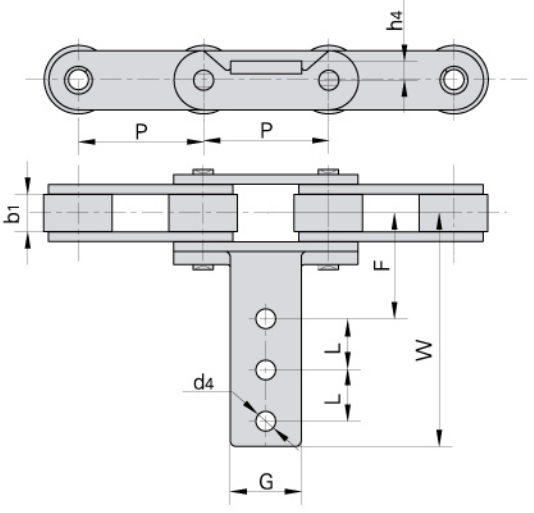

Donghua Chain No. *Donghua Ketten Nr.*	P	b1	G	L	F	W	h4	d4
	mm	mm	mm	mm	mm	mm	mm	mm
C2082HF4	50.8	15.75	28.6	50.8	57.4	181.4	8.7	11.1

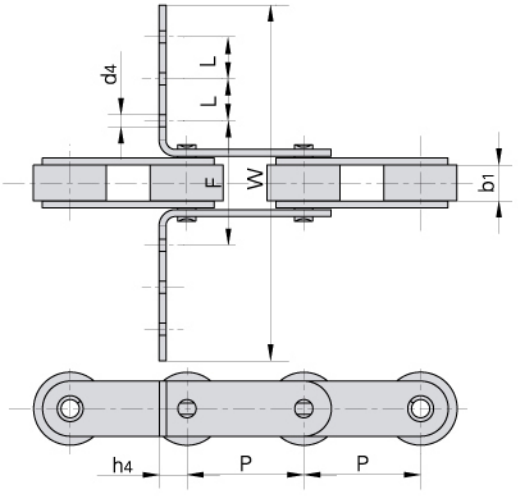

Donghua Chain No. *Donghua Ketten Nr.*	P	b1	L	F	W	h4	d4
	mm	mm	mm	mm	mm	mm	mm
C2100HF2	63.5	18.9	52.5	70.0	300.0	30.0	5.5

Double pitch conveyor chain with special attachments
Langgliedrige Förderketten mit Sonder-Anbauteilen

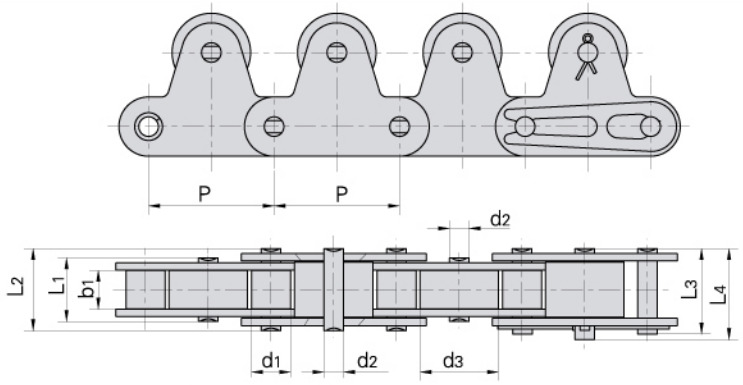

Donghua Chain No. *Donghua Ketten Nr.*	Pitch *Teilung*	Roller diameter *Rollen-durch-messer*		Width between inner plates *Innere Breite*	Pin diameter *Bolzen-durch-messer*	Pin length *Bolzen-länge*				Ultimate tensile strength *Min. Bruchkraft*	Weight per meter *Gewicht*
	P	d_1 max	d_3 max	b_1 min	d_2 max	L_1 max	L_2 max	L_3 max	L_4 max	Q min	q
	mm	mm	mm	mm	mm	mm	mm	mm	mm	kN/LB	kg/m
C2040–1LTR	25.40	7.95	15.88	7.85	3.96	13.5	16.6	17.8	18.8	14.1/3205	1.15
C2050–1LTR	31.75	10.16	19.05	9.40	5.08	16.5	20.7	22.2	23.3	22.2/5045	1.85
C2060–1LTR	38.10	11.91	22.23	12.57	5.94	21.0	25.9	27.7	28.3	31.8/7227	3.50
C2080–1LTR	50.80	15.88	28.58	15.75	7.92	26.2	32.7	35.0	36.5	56.7/12886	5.50
C2100–1LTR	63.50	19.05	39.67	18.90	9.53	32.3	40.4	44.7	44.7	88.5/20114	8.70

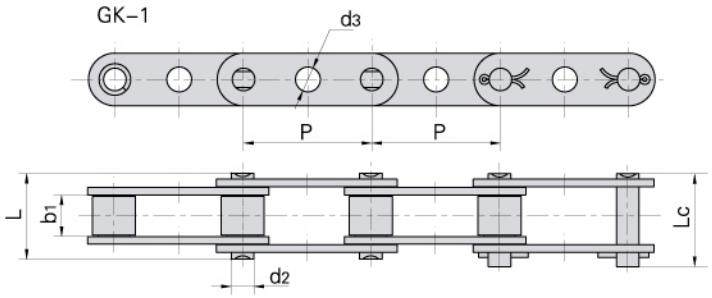

DIN/ISO Chain No. *DIN/ISO Ketten Nr.*	ANSI Chain No. *ANSI Ketten Nr.*	P	b_1	d_2	d_3	L	Lc
		mm	mm	mm	mm	mm	mm
C208A C208AL	C2040 C2042	25.40	7.85	3.96	4.1	16.6	18.8
C210A C210AL	C2050 C2052	31.75	9.40	5.08	5.1	20.7	23.3
C212A C212AL	C2060 C2062	38.10	12.57	5.94	6.1	25.9	28.3
C212AH C212AHL	C2060H C2062H	38.10	12.57	5.94	6.1	29.2	31.6
C216A C216AL	C2080 C2082	50.80	15.75	7.92	8.1	32.7	36.5
C216AH C216AHL	C2080H C2082H	50.80	15.75	7.92	8.1	36.2	39.4
C220A C220AL	C2100 C2102	63.50	18.90	9.53	10.1	40.4	44.7
C220AH C220AHL	C2100H C2102H	63.50	18.90	9.53	10.1	43.6	46.9

Double pitch conveyor chain with special attachments
Langgliedrige Förderketten mit Sonder-Anbauteilen

GK–1

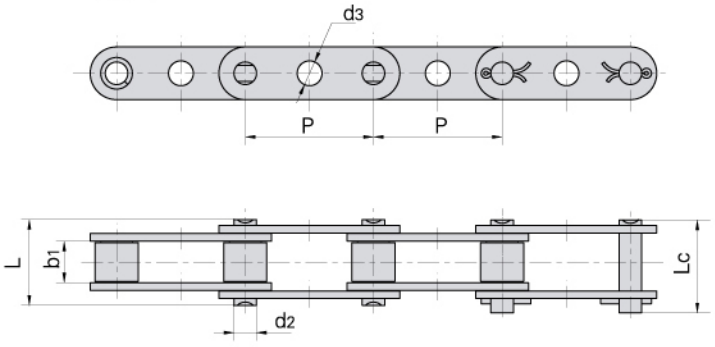

Donghua Chain No. *Donghua Ketten Nr.*	P	b1	d2	d3	L	Lc
	mm	mm	mm	mm	mm	mm
C2050GKF2	31.75	9.40	5.08	8.1	20.7	22.2
C2050GKF3	31.75	9.40	5.08	8.1	20.7	22.2
C2050GKF4	31.75	9.40	5.08	7.0	20.7	22.2
C2050GKF5	31.75	9.40	5.08	7.1	20.7	22.2
C2050GKF6	31.75	9.40	5.08	6.0	20.7	22.2
C2050GKF7	31.75	9.40	5.08	6.1	20.7	22.2
C2050GKF8	31.75	9.40	5.08	8.3	20.7	22.2
C2050HGK	31.75	9.40	5.08	8.2	22.1	23.4
C2050HGKF1	31.75	9.40	5.08	7.0	22.1	23.4
C2052HGKF3	31.75	9.40	5.08	6.0	22.1	23.4
C2050HGKF4	31.75	9.40	5.08	8.1	22.1	23.4
C2060GKF1	38.10	12.57	5.94	8.0	25.9	27.7
C2060GKF2	38.10	12.57	5.94	8.1	25.9	27.7
C2060GKF3	38.10	12.57	5.94	6.2	25.9	27.7
C2060GKF8	38.10	12.57	5.94	8.8	25.9	27.7
C2060HGKF3	38.10	12.57	5.94	8.2	29.2	31.6
C2060HGKF4	38.10	12.57	5.94	8.3	29.2	31.6
C2060HGKF5	38.10	12.57	5.94	6.0	29.2	31.6
C2060HGKF6	38.10	12.57	5.94	8.3	29.2	31.6
C2060HGKF7	38.10	12.57	5.94	10.0	29.2	31.6
C2060HGKF10	38.10	12.57	5.94	8.8	29.2	31.6
C2080HGKF2	50.80	15.75	7.92	7.9	36.2	39.4
C2080HGKF6	50.80	15.75	7.92	11.0	36.2	39.4
C220AGK	63.50	18.90	9.53	8.0	40.4	44.7
C208BGKF1	25.40	7.75	4.45	6.0	16.7	18.2

Double pitch conveyor chain with extended pins
Langgliedrige Förderketten mit Mitnehmerbolzen

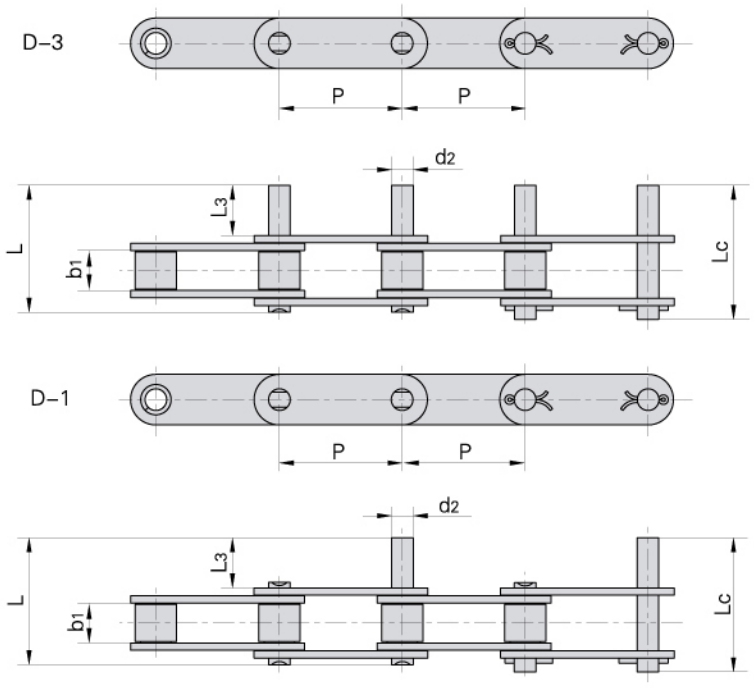

DIN/ISO Chain No. *DIN/ISO Ketten Nr.*	ANSI Chain No. *ANSI Ketten Nr.*	P	b1	d2	L3	L	Lc
		mm	mm	mm	mm	mm	mm
C208A C208AL	C2040 C2042	25.40	7.85	3.96	9.5	25.1	26.2
C210A C210AL	C2050 C2052	31.75	9.40	5.08	11.9	31.3	33.1
C212A C212AL	C2060 C2062	38.10	12.57	5.94	14.3	38.6	40.6
C212AH C212AHL	C2060H C2062H	38.10	12.57	5.94	14.3	42.0	43.8
C216A C216AL	C2080 C2082	50.80	15.75	7.92	19.1	50.3	53.3
C216AH C216AHL	C2080H C2082H	50.80	15.75	7.92	19.1	53.5	55.0
C220A C220AL	C2100 C2102	63.50	18.90	9.53	23.8	61.8	66.1
C220AH C220AHL	C2100H C2102H	63.50	18.90	9.53	23.8	65.0	68.3
C224AH C224AHL	C2120H C2122H	76.20	25.22	11.10	28.6	79.6	83.6
C232AH C232AHL	C2160H C2162H	101.60	31.75	14.27	38.1	103.0	107.8

Double pitch conveyor chain with extended pins
Langgliedrige Förderketten mit Mitnehmerbolzen

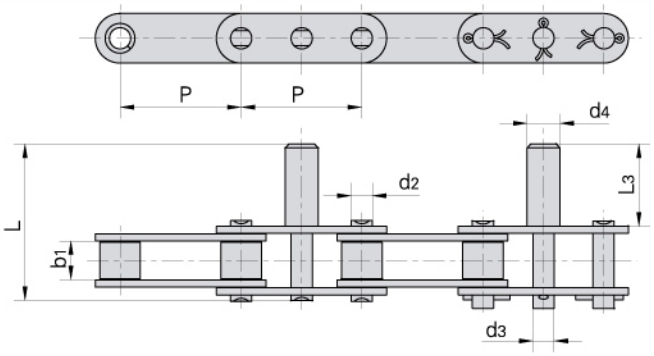

Donghua Chain No. *Donghua Ketten Nr.*	P	b1	d2	d3	d4	L3	L
	mm	mm	mm	mm	mm	mm	mm
C2052F2	31.75	9.40	5.08	6.00	7.0	20.0	39.8
C2052F14	31.75	9.40	5.08	6.00	7.0	21.0	40.4
C2062–D38	38.10	12.57	5.94	5.94	11.1	24.2	48.6
C2062–D39	38.10	12.57	5.94	5.94	13.3	32.2	56.6
C212AHL–D4	38.10	12.57	5.94	5.94	8.0	25.0	53.0
C212AHF3	38.10	12.57	5.94	8.08	10.0	35.0	63.0
C212AHF7	38.10	12.57	5.94	5.94	12.7	41.2	69.2
C212AHF8	38.10	12.57	5.94	8.00	10.0	35.0	63.0
C2060HF9	38.10	12.57	5.94	7.95	12.7	41.3	69.3
C2060HF10	38.10	12.57	5.94	7.70	14.3	41.3	69.3
C2060H–D23	38.10	12.57	5.94	8.80	12.7	41.3	69.3
C2060H–D24	38.10	12.57	5.94	7.95	12.7	44.8	65.6
C2060H–D31	38.10	12.57	5.94	7.95	16.0	45.0	73.0
C2062H–D41	38.10	12.57	5.94	9.53	9.5	22.2	50.0

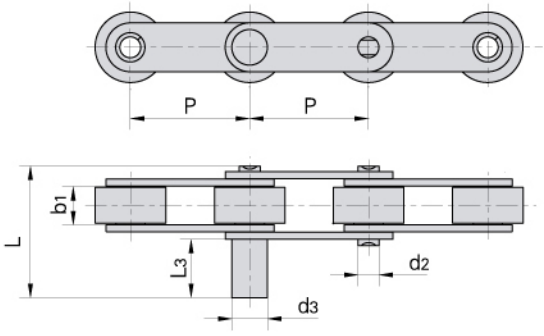

Donghua Chain No. *Donghua Ketten Nr.*	P	b1	d2	d3	L3	L
	mm	mm	mm	mm	mm	mm
C2052DF1	31.75	9.40	5.08	7.50	14.15	33.6
C210AF4	31.75	9.40	5.08	11.00	34.00	53.7
C2052–D4	31.75	9.40	5.08	6.00	32.40	52.0
C2050–D5	31.75	9.40	5.08	8.00	40.00	59.7
C212AHL–D4	38.10	12.57	5.94	8.00	25.00	53.0
C2062–D6	38.10	12.57	5.94	12.00	25.00	49.7

Double pitch conveyor chain with extended pins
Langgliedrige Förderketten mit Mitnehmerbolzen

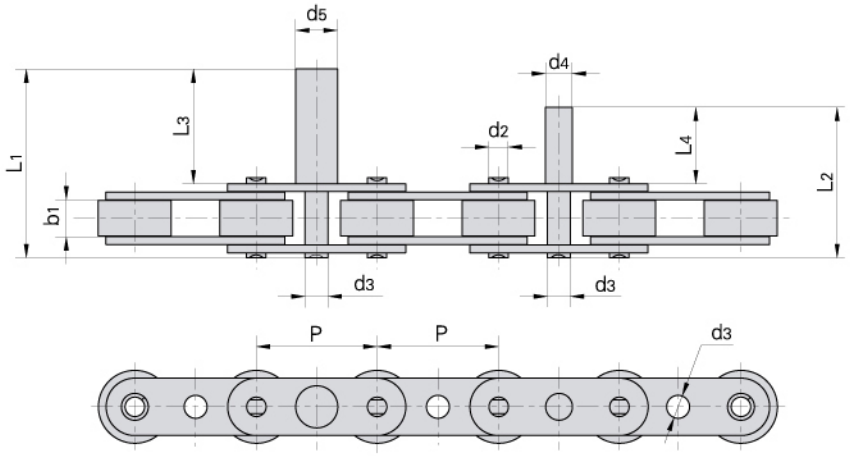

Donghua Chain No. *Donghua Ketten Nr.*	P	b1	d2	d3	d4	d5	L3	L1	L4	L2
	mm	mm	mm	mm	mm	mm	mm	mm	mm	mm
C2052F1	31.75	9.4	5.08	6.0	7.0	11.0	30.0	49.8	20.0	39.8

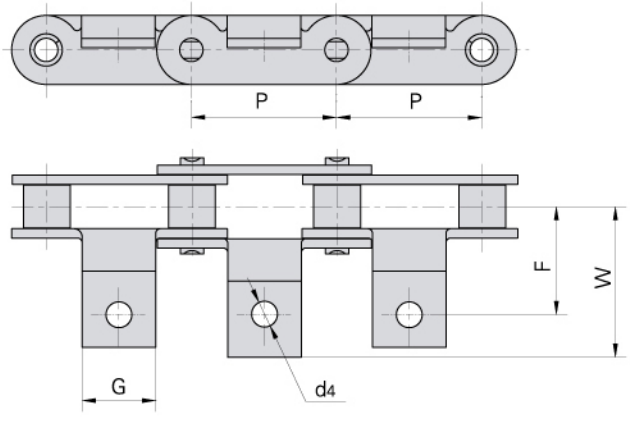

Donghua Chain No. *Donghua Ketten Nr.*	P	G	F	W	d4
	mm	mm	mm	mm	mm
C2050A6	31.75	16.0	23.4	32.8	5.5

Double plus chains
Stauförderketten

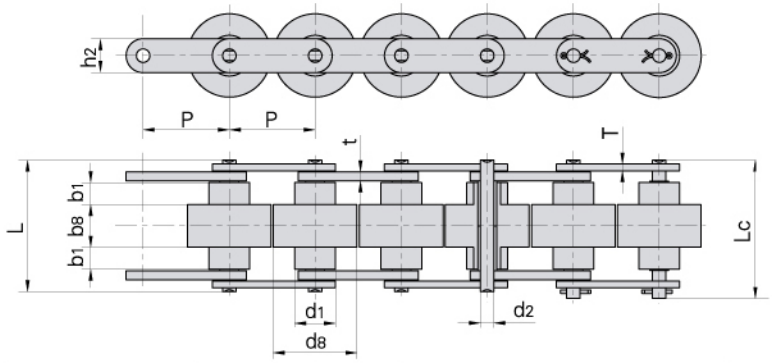



JB Chain No. *JB Ketten Nr.*	Donghua Chain No. *Donghua Ketten Nr.*	Pitch *Teilung*	Roller dimension *Rollen-abmessungen*				Pin diameter *Bolzen-durch-messer*	Pin length *Bolzen-länge*		Plate dimension *Laschen-abmessungen*			Weight per meter *Gewicht*
		P	d_1 max	d_8 max	b_1 min	b_8 max	d_2 max	L max	Lc max	h_2 max	T max	t max	q
		mm	mm	mm	mm	mm	mm	mm	mm	mm	mm	mm	kg/m
BS25–C206B	C2030W	19.05	11.91	18.3	4.00	8.0	3.28	24.0	25.6	8.20	1.30	1.50	0.52
BS25–C208A	C2040W	25.40	15.88	24.6	5.70	10.3	3.96	31.0	32.8	11.70	1.50	1.50	0.79
BS25–C210A	C2050W	31.75	19.05	30.6	7.10	13.0	5.08	39.5	41.2	15.00	2.03	2.03	1.36
BS25–C212A	C2060HW	38.10	22.23	36.6	8.50	15.5	5.94	48.8	51.5	18.00	3.25	3.25	2.19
BS25–C216A	C2080W	50.80	28.58	49.0	11.00	21.5	7.92	66.2	70.0	24.00	4.00	5.00	4.06
BS30–C206B		19.05	9.00	18.3	4.50	9.1	3.28	26.3	29.6	7.28	1.30	1.50	0.50
BS30–C208A		25.40	11.91	24.6	6.10	12.5	3.96	35.6	39.5	9.60	1.50	2.00	0.83
BS30–C210A		31.75	14.80	30.6	7.50	15.0	5.08	43.0	47.1	12.20	2.00	2.40	1.27
BS30–C212A		38.10	18.00	37.0	9.75	20.0	5.94	58.1	62.7	15.00	3.00	4.00	2.14
BS30–C216A		50.80	22.23	49.0	12.00	25.2	7.92	71.9	77.3	18.60	4.00	5.00	3.55

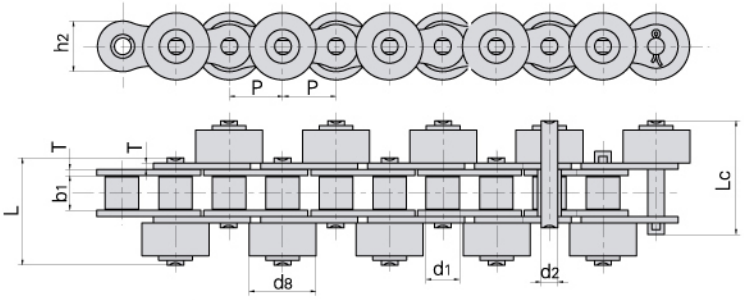

Donghua Chain No. *Donghua Ketten Nr.*	Pitch *Teilung*	Roller diameter *Rollen-durch-messer*		Width between inner plates *Innere Breite*	Pin diameter *Bolzen-durch-messer*	Pin length *Bolzen-länge*		Plate dimension *Laschen-abmessungen*		Ultimate tensile strength *Min. Bruchkraft*	Average tensile strength *Durchschn. Bruchkraft*	Weight per meter *Gewicht*
	P	d_1 max	d_8 max	b_1 min	d_2 max	L max	Lc max	h_2 max	T max	Q min	Q_0	q
	mm	mm	mm	mm	mm	mm	mm	mm	mm	kN/LB	kN	kg/m
*40S	12.700	7.95	15.88	7.85	3.96	25.8	27.0	12.0	1.50	13.8/3102	17.5	0.9
40–PSR	12.700	7.95	15.88	7.85	3.96	25.8	27.0	12.0	1.50	13.8/3102	17.5	1.6
50–SR–C	15.875	10.16	19.05	9.40	5.08	31.8	34.0	15.1	2.03	21.8/4900	29.4	2.4
*60S	19.050	11.91	22.23	12.57	5.94	40.0	42.5	18.0	2.42	31.8/7227	41.5	1.9
*80S	25.400	15.88	28.58	15.75	7.92	51.3	54.3	24.0	3.25	56.7/12886	69.4	3.6
80S–C	25.400	15.88	28.58	15.75	7.92	51.3	54.3	24.0	3.25	56.7/12886	69.4	5.8

Note: * means roller made in plastic.
*Hinweis: * Rollen aus Kunststoff*

Double plus chains
Stauförderketten

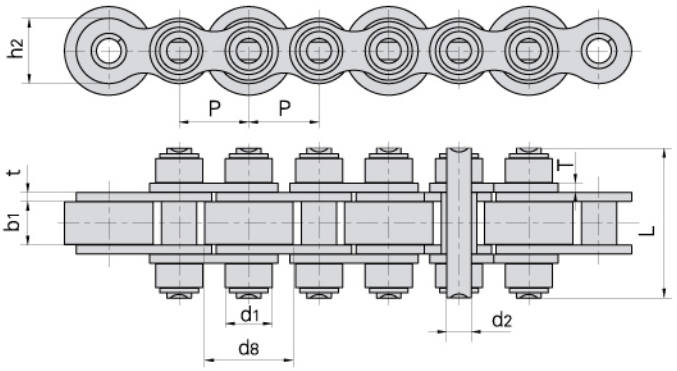



Donghua Chain No. *Donghua Ketten Nr.*	Pitch *Teilung*	Roller diameter *Rollen-durch-messer*		Width between inner plates *Innere Breite*	Pin diameter *Bolzen-durch-messer*	Pin length *Bolzen-länge*	Plate dimension *Laschen-abmessungen*		Ultimate tensile strength *Min. Bruchkraft*	Average tensile strength *Durchschn. Bruchkraft*
	P	d_1 max	d_8 max	b_1 min	d_2 max	L max	h_2 max	t/T max	Q min	Q_0
	mm	mm	mm	mm	mm	mm	mm	mm	kN/LB	kN
08BS–27–P16/C16	12.70	8.51	16.0	7.75	4.45	27.0	11.8	1.60/1.50	18.0/4091	19.8
12BS	19.05	12.07	28.0	11.68	5.72	45.0	16.0	1.85	28.9/6568	31.7
12BS–40–P28/C28	19.05	12.07	28.0	11.68	5.72	40.0	16.0	1.85	29.0/6591	31.7
12BS–43–P26/C26	19.05	12.07	26.0	11.68	5.72	43.0	16.0	1.85	29.0/6591	31.7
12BS–43–P28/C28	19.05	12.07	28.0	11.68	5.72	43.0	16.0	1.85	29.0/6591	31.7
12BS–48–P24/C24	19.05	12.07	24.0	11.68	5.72	48.0	16.0	1.85	29.0/6591	31.7
12BS–48–P26/C26	19.05	12.07	26.0	11.68	5.72	48.0	16.0	1.85	29.0/6591	31.7
12BS–48–P28/C28	19.05	12.07	28.0	11.68	5.72	48.0	16.0	1.85	29.0/6591	31.7
16BS–65–P38/C38	25.40	15.88	38.0	17.02	8.28	65.0	21.0	4.15/3.10	60.0/13636	72.8

Note: P means roller made in plastic, C means roller made in steel.
Hinweis: P bedeutet Rollen aus Kunststoff, C bedeutet Rollen aus Stahl.

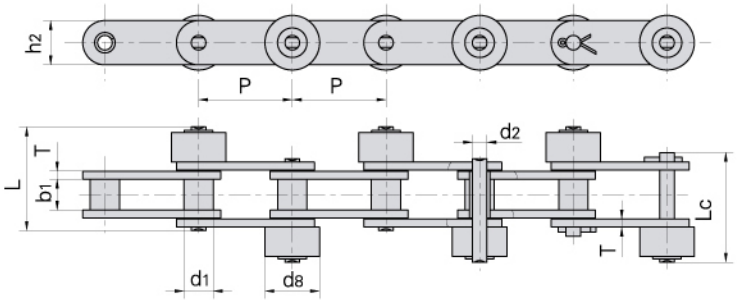

Donghua Chain No. *Donghua Ketten Nr.*	Pitch *Teilung*	Roller diameter *Rollen-durch-messer*		Width between inner plates *Innere Breite*	Pin diameter *Bolzen-durch-messer*	Pin length *Bolzen-länge*		Plate dimension *Laschen-abmessungen*		Ultimate tensile strength *Min. Bruchkraft*	Average tensile strength *Durchschn. Bruchkraft*	Weight per meter *Gewicht*
	P	d_1 max	d_8 max	b_1 min	d_2 max	L max	Lc max	h_2 max	T max	Q min	Q_0	q
	mm	mm	mm	mm	mm	mm	mm	mm	mm	kN/LB	kN	kg/m
C2040S2–PSR	25.40	7.95	15.88	7.85	3.96	25.80	27.0	12.0	1.50	13.8/3137	15.18	0.99
C2050S	31.75	10.16	19.05	9.40	5.08	31.80	34.0	15.0	2.03	21.8/4955	23.90	1.52
C2052SF1	31.75	19.05	27.00	9.40	5.08	35.00	37.3	15.0	2.03	21.8/4955	23.90	3.06
C2060HS	38.10	11.91	22.23	12.57	5.94	44.00	46.6	18.0	3.25	31.1/7069	42.70	1.78

LUMBER CONVEYOR CHAINS & ATTACHMENTS

FÖRDERKETTEN FÜR DIE HOLZINDUSTRIE & ANBAUTEILE

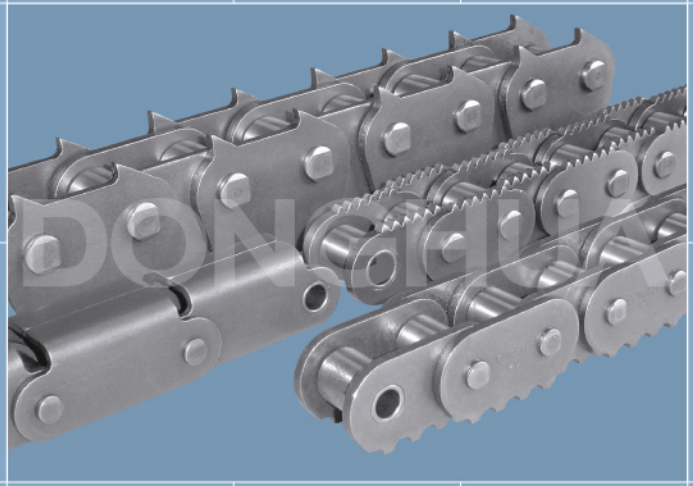

Lumber conveyor chains & attachments
Förderketten für die Holzindustrie & Anbauteile

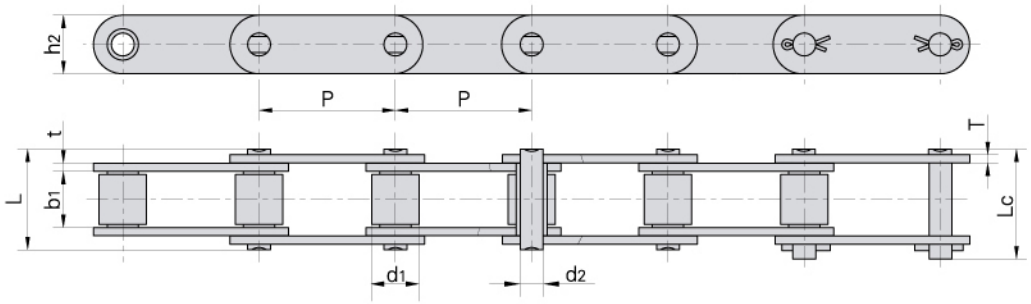

Donghua Chain No. *Donghua Ketten Nr.*	Pitch *Teilung*	Roller diameter *Rollen-durch-messer*	Width between inner plates *Innere Breite*	Pin diameter *Bolzen-durch-messer*	Pin length *Bolzen-länge*		Inner plate depth *Innere Laschen-höhe*	Plate thickness *Laschen-dicke*	Ultimate tensile strength *Min. Bruchkraft*	Average tensile strength *Durchschn. Bruchkraft*	Weight per meter *Gewicht*
	P	d_1 max	b_1 min	d_2 max	L max	Lc max	h_2 max	t/T max	Q min	Q_0	q
	mm	mm	mm	mm	mm	mm	mm	mm	kN/LB	kN	kg/m
81X	66.27	23.00	27.00	11.10	49.0	53.5	28.50	4.00	106.7/24250	128.9	3.78
81XH	66.27	23.00	27.78	11.10	60.7	65.1	31.35	7.94/5.55	151.9/34523	175.7	5.88
81XHE	66.27	22.20	27.00	11.10	59.5	63.0	28.50	6.30	83.3/18927	89.1	5.09
81XF14	66.27	23.00	27.00	11.10	50.8	53.8	28.70	4.00	85.5/19426	91.4	3.78
81XHH	66.27	23.00	27.78	11.10	65.6	70.0	31.35	7.94	191.1/43432	212.6	6.70
81XHS	66.27	23.00	27.00	11.10	63.6	68.0	31.80	7.60	152.0/34545	177.2	6.55
500R	50.00	25.40	25.40	14.63	52.0	56.4	40.00	5.00	100.0/22727	114.5	7.13
441.100R	100.00	25.40	25.40	14.63	52.0	56.4	40.00	5.00	100.0/22727	114.5	5.15

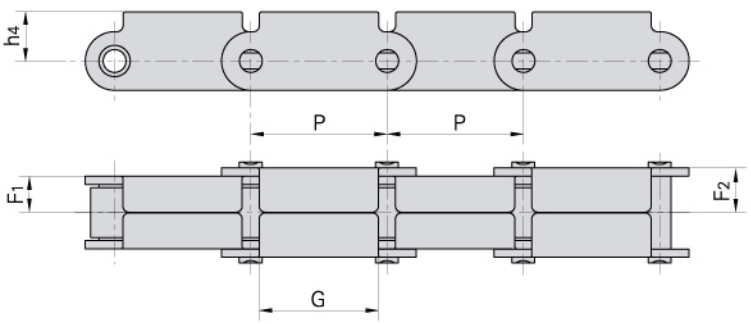

Donghua Chain No. *Donghua Ketten Nr.*	P	F_1	F_2	G	h_4
	mm	mm	mm	mm	mm
81XF1(RT)	66.27	17.5	21.8	58.0	23.85

Lumber conveyor chains & attachments
Förderketten für die Holzindustrie & Anbauteile

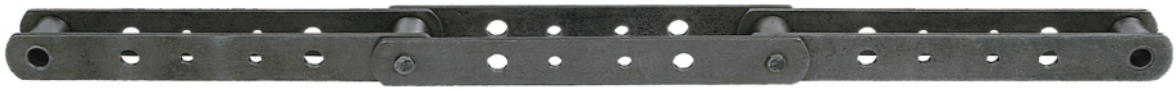

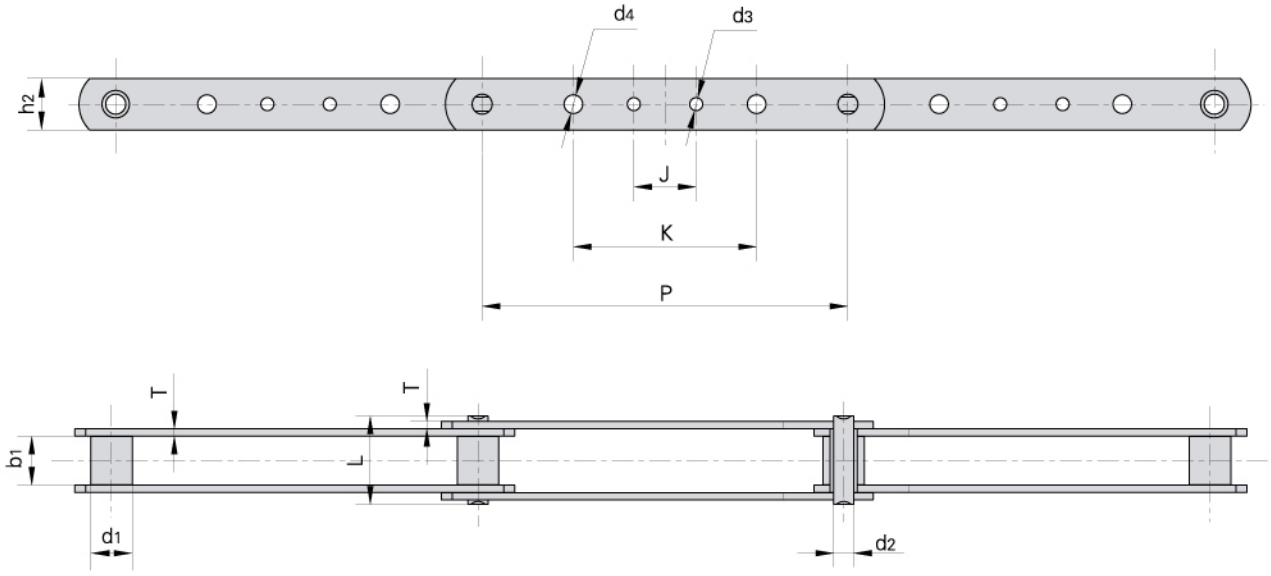

Donghua Chain No. *Donghua Ketten Nr.*	Pitch *Teilung*	Roller diameter *Rollen-durch-messer*	Width between inner plates *Innere Breite*	Pin dimension *Bolzen-abmessungen*		Plate dimension *Laschen-abmessungen*					Plate thickness *Laschen-dicke*	Ultimate tensile strength *Min. Bruchkraft*	Average tensile strength *Durchschn. Bruchkraft*	Weight per meter *Gewicht*
	P	d_1 max	b_1 min	d_2 max	L max	h_2 max	d_3 max	d_4 max	J max	K max	T max	Q min	Q_0	q
	mm	mm	mm	mm	mm	mm	mm	mm	mm	mm	mm	kN/LB	kN	kg/m
3939–B4	203.2	23.0	27.0	11.1	49.0	28.58	7.2	7.2	38.1	101.6	4.0	115.58/26268	136.5	2.45
3939–B21	203.2	23.0	27.0	11.1	49.0	28.58	7.2	–	38.1	–	4.0	115.58/26268	136.5	2.45
3939–B23	203.2	23.0	27.0	11.1	49.0	28.58	–	10.3	–	92.1	4.0	115.58/26268	136.5	2.45
3939–B24	203.2	23.0	27.0	11.1	49.0	28.58	–	7.2	–	101.6	4.0	115.58/26268	136.5	2.48
3939–B40	203.2	23.0	27.0	11.1	49.0	28.58	–	10.3	–	101.6	4.0	115.58/26268	136.5	2.45
3939–B43	203.2	23.0	27.0	11.1	49.0	28.58	7.2	10.3	38.1	92.1	4.0	115.58/26268	136.5	2.42
3939–B44	203.2	23.0	27.0	11.1	49.0	28.58	7.2	10.3	38.1	101.6	4.0	115.58/26268	136.5	2.45
3939H–B4	203.2	23.0	27.0	11.1	58.0	28.60	–	7.2	38.0	102.0	6.4	150.00/34082	172.5	3.51

Sharp top chains
Verzahnte Laschen

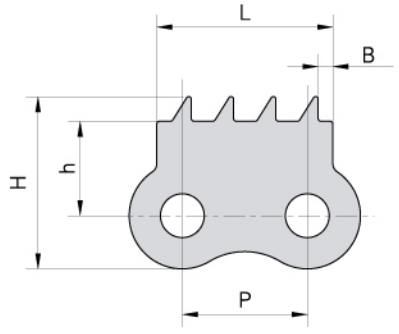

Donghua Chain No. *Donghua Ketten Nr.*	P	h	H	B	L
	mm	mm	mm	mm	mm
08B–940	12.7	9.6	17.5	1.5	17.9

C16AF1 C16A–3PEP

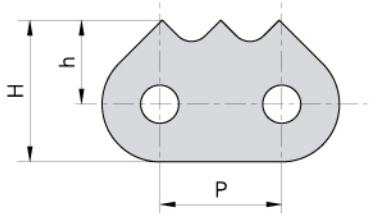

C16AF2 C16A–5PEP C16A–5PEPF1 16A–1171

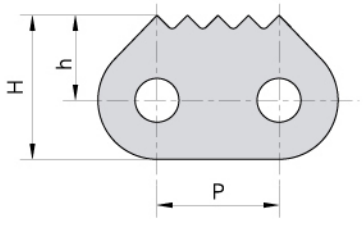

Donghua Chain No. *Donghua Ketten Nr.*	P	h	H
	mm	mm	mm
16A–1171	25.4	16.00	26.40
C16A–3PEP	25.4	17.40	29.00
C16A–5PEP	25.4	17.40	29.00
C16A–5PEPF1	25.4	17.30	29.50
C16AF1	25.4	17.50	29.50
C16AF2	25.4	17.50	29.50

C60F2

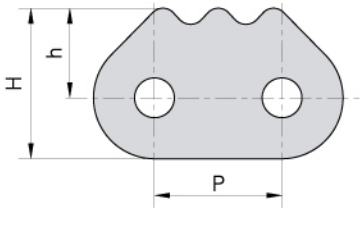

12B–910 60–910

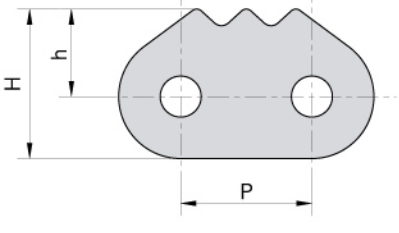

12BF3 C16A–1170

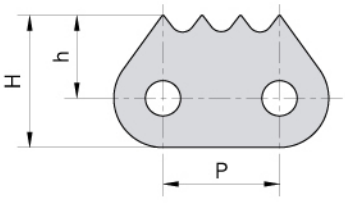

Donghua Chain No. *Donghua Ketten Nr.*	P	h	H
	mm	mm	mm
12BF3	19.05	13.50	21.50
12B–910	19.05	13.70	21.70
60–910	19.05	12.70	21.70
C60F2	19.05	13.38	22.48
C16A–1170	25.40	16.50	28.00

Sharp top chains
Verzahnte Laschen

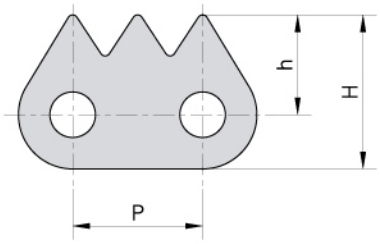

Donghua Chain No. / *Donghua Ketten Nr.*	P	h	H
	mm	mm	mm
08BF71	12.7	9.75	15.05

Donghua Chain No. / *Donghua Ketten Nr.*	P	h	H	L
	mm	mm	mm	mm
10AF42	15.875	11.5	19.0	30.9
12B–911	19.050	11.9	20.0	35.0

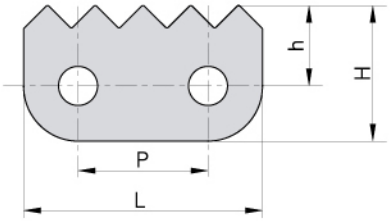

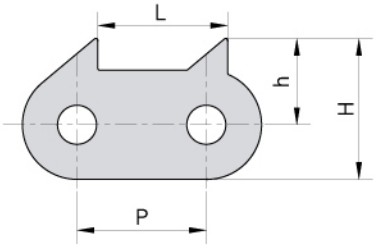

Donghua Chain No. / *Donghua Ketten Nr.*	P	h	H	L
	mm	mm	mm	mm
C12B–9010	19.05	13.0	21.0	19.05
C12B–940	19.05	13.2	22.3	19.75

Donghua Chain No. / *Donghua Ketten Nr.*	P	h	H	L
	mm	mm	mm	mm
16B–1187	25.4	16.0	26.5	46

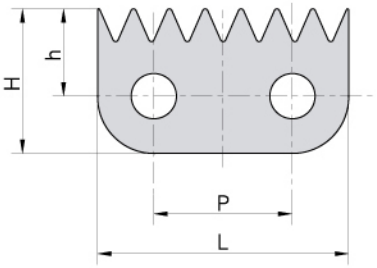

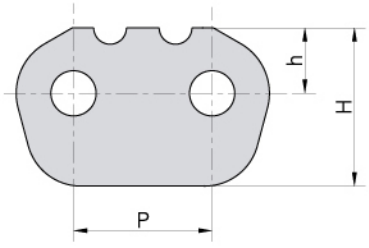

Donghua Chain No. / *Donghua Ketten Nr.*	P	h	H
	mm	mm	mm
16BF45	25.4	12.0	29.0

Sharp top chains
Verzahnte Laschen

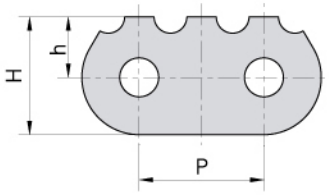

Donghua Chain No. *Donghua Ketten Nr.*	P	h	H
	mm	mm	mm
60–911	19.05	9.25	18.00
60–912	19.05	9.20	17.95

C16A–1160

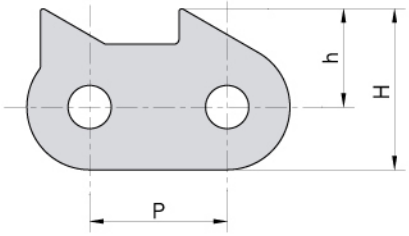

Donghua Chain No. *Donghua Ketten Nr.*	P	h	H
	mm	mm	mm
C16A–1160	25.4	18	29.5

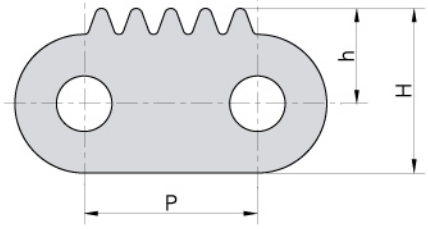

Donghua Chain No. *Donghua Ketten Nr.*	P	h	H
	mm	mm	mm
LL1044F1	15.875	8.73	15.08

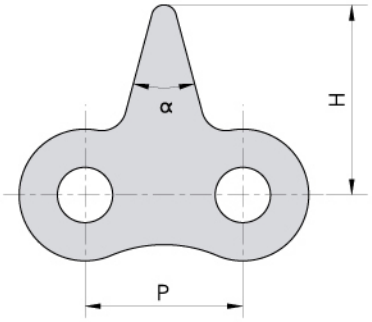

Donghua Chain No. *Donghua Ketten Nr.*	P	H	α
	mm	mm	
06BF39	9.525	11.00	30°
08AF10	12.700	15.60	30°
08BF30	12.700	14.50	30°
08BF38	12.700	14.60	40°
08BF5	12.700	15.30	30°
08BF51	12.700	14.00	50°
08BF56	12.700	14.40	30°
08BF86	12.700	15.00	50°
08BSSF11	12.700	14.60	40°
10AF7	15.875	15.88	21°
10BF40	15.875	17.40	25°
12B–1STCF1	19.050	19.00	30°
16AF44	25.400	31.80	50°
20A–1STCF1	31.750	53.00	82.1°

Sharp top chains
Verzahnte Laschen

Donghua Chain No. *Donghua Ketten Nr.*	P	h	H	L
	mm	mm	mm	mm
C16B–1160	25.4	10.5	27.5	4.8
C16B–1161	25.4	10.5	27.5	6.0

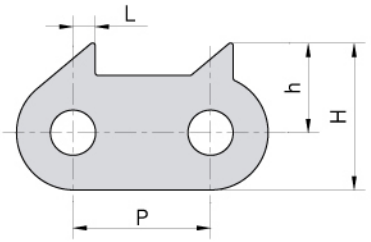

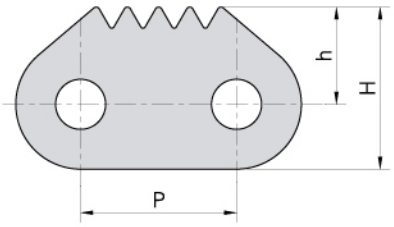

Donghua Chain No. *Donghua Ketten Nr.*	P	h	H
	mm	mm	mm
C20BF9	31.75	19.8	33.0

Donghua Chain No. *Donghua Ketten Nr.*	P	h	H
	mm	mm	mm
24B–1810	38.1	19	35.5
120F6	38.1	21	38.5

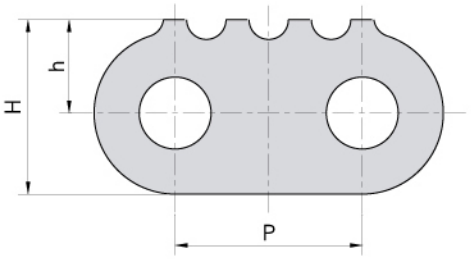

Donghua Chain No. *Donghua Ketten Nr.*	P	h	H	L
	mm	mm	mm	mm
32BF4	50.8	26	70.0	30

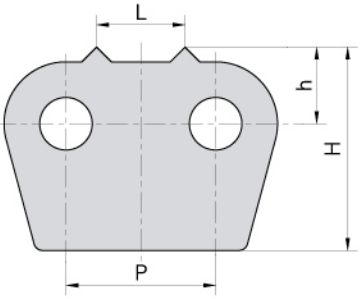

Sharp top chains
Verzahnte Laschen

C16BF2

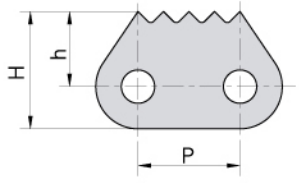

C16BF3

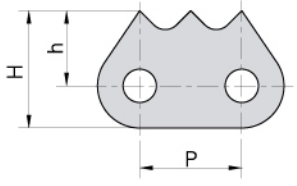

16B–1170 16B–1172 C24B–4STC

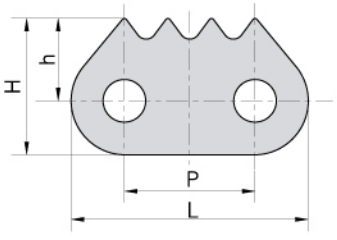

16B–1180

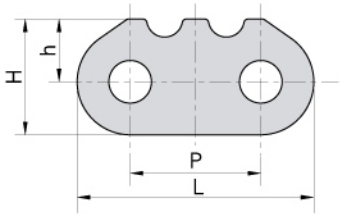

Donghua Chain No. *Donghua Ketten Nr.*	P	L	h	H
	mm	mm	mm	mm
C16BF2	25.4	46.4	18.7	29.2
C16BF3	25.4	46.4	18.7	29.2
16B–1170	25.4	46.1	16.0	26.5
16B–1180	25.4	46.0	12.2	22.5
16B–1172	25.4	46.1	15.0	25.5
C24B–4STC	38.1	70.4	18.3	35.0

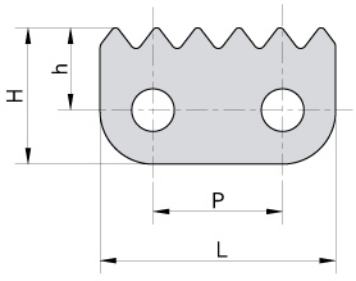

Donghua Chain No. *Donghua Ketten Nr.*	P	L	h	H
	mm	mm	mm	mm
16B–1185	25.4	46.0	16.0	26.5
16B–6STC	25.4	46.0	16.0	26.5

Sharp top chains
Verzahnte Laschen

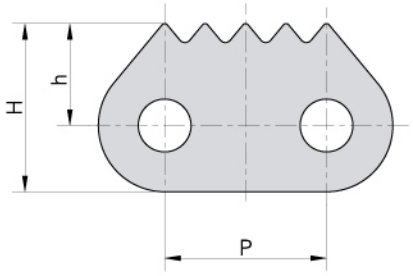

Donghua Chain No. *Donghua Ketten Nr.*	P	h	H
	mm	mm	mm
C12BF56	19.05	13.0	22.0
16BF24	25.40	16.0	26.4
16BF29	25.40	15.9	26.4
C24B–1831	38.10	22.5	39.0
24A–1–STA	38.10	21.0	38.5
C12BF56–STC	19.50	13.0	22.0

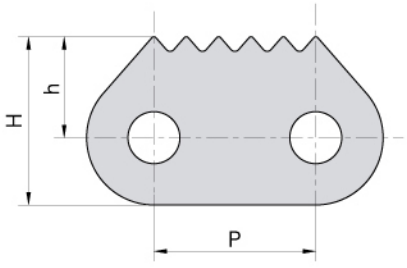

Donghua Chain No. *Donghua Ketten Nr.*	P	h	H
	mm	mm	mm
20BF8	31.75	19.8	33.0
20B–1310	31.75	19.8	33.0
C24B–6STCF1	38.10	23.5	40.0

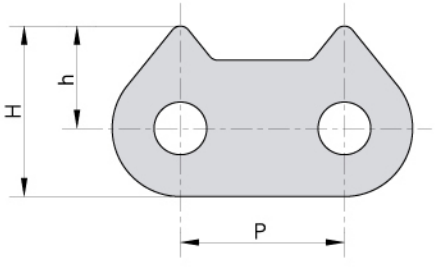

Donghua Chain No. *Donghua Ketten Nr.*	P	h	H
	mm	mm	mm
20B–1350	31.75	19.8	33.0

Sharp top chains
Verzahnte Laschen

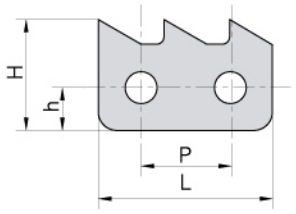

Donghua Chain No. *Donghua Ketten Nr.*	P	L	h	H
	mm	mm	mm	mm
20AF1	31.75	57.2	14.75	35.84

Donghua Chain No. *Donghua Ketten Nr.*	P	L	h	H
	mm	mm	mm	mm
120–1802	38.1	73.1	21.0	38.5

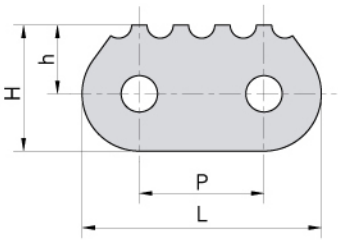

24B–1805

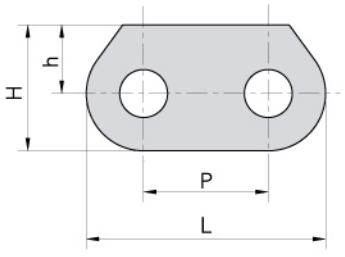

24B–1807

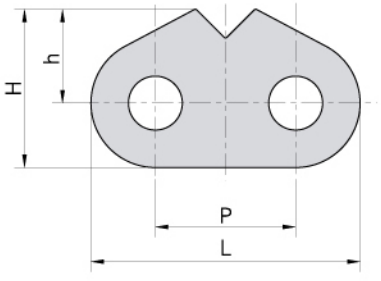

C24B–1820

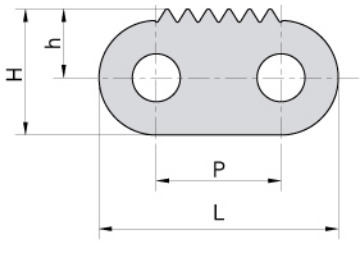

24B–1809

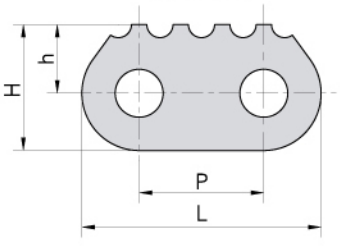

Donghua Chain No. *Donghua Ketten Nr.*	P	L	h	H
	mm	mm	mm	mm
24B–1805	38.1	73.1	21.0	38.5
24B–1807	38.1	73.1	25.5	43.0
24B–1809	38.1	73.1	21.0	38.5
C24B–1820	38.1	73.1	21.0	38.5

Sharp top chains
Verzahnte Laschen

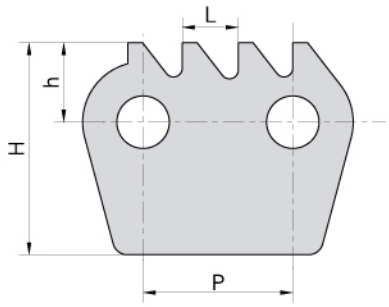

Donghua Chain No. *Donghua Ketten Nr.*	P	h	H	L
	mm	mm	mm	mm
32B–1875	50.8	27	72.0	19.0
32BF20–1875	50.8	30	74.0	13.5

Donghua Chain No. *Donghua Ketten Nr.*	P	h	H	L
	mm	mm	mm	mm
32B–1876	50.8	27	72.0	50.8

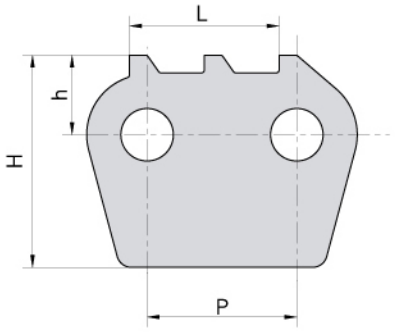

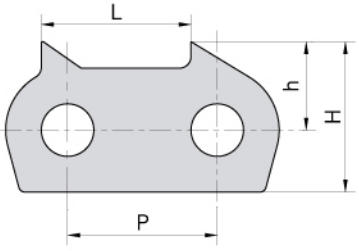

Donghua Chain No. *Donghua Ketten Nr.*	P	h	H	L
	mm	mm	mm	mm
32B–1877	50.8	30	51	50.8

Donghua Chain No. *Donghua Ketten Nr.*	P	h	H	L
	mm	mm	mm	mm
32B–1878	50.8	27	72	50.8

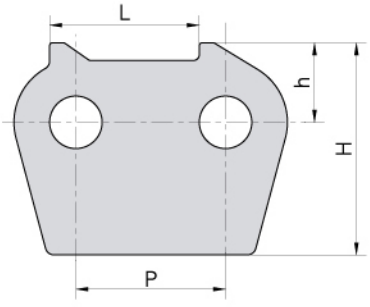

Sharp top chains
Förderketten mit verzahnten Laschen

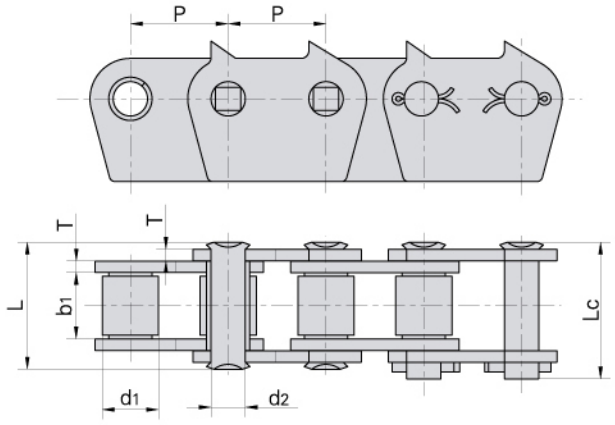

Donghua Chain No. *Donghua Ketten Nr.*	Pitch *Teilung*	Roller diameter *Rollen-durch-messer*	Width between inner plates *Innere Breite*	Pin diameter *Bolzen-durch-messer*	Pin length *Bolzen-länge*		Plate thickness *Laschen-dicke*	Ultimate tensile strength *Min. Bruchkraft*	Average tensile strength *Durchschn. Bruchkraft*	Weight per meter *Gewicht*
	P	d_1 max	b_1 min	d_2 max	L max	Lc max	T max	Q min	Q_0	q
	mm	mm	mm	mm	mm	mm	mm	kN/LB	kN	kg/m
32B–1–1872	50.8	29.21	33.0	17.81	66.0	71.0	6.0	250.0/56818	275.0	13.54

32B–1872

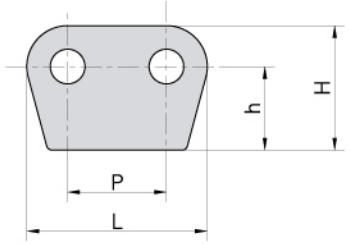

32B–1874 32B–1900F1
32BF15 C32B–1874F1

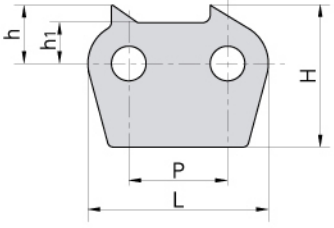

Donghua Chain No. *Donghua Ketten Nr.*	P	L	h_1	h	H
	mm	mm	mm	mm	mm
32B–1872	50.8	92.8	–	43.0	64.0
32B–1874	50.8	92.8	21.0	30.0	73.0
32B–1900F1	50.8	92.8	21.0	30.0	75.0
32BF15	50.8	91.8	20.0	45.0	75.0
C32B–1874F1	50.8	92.8	21.0	40.0	83.0

Sharp top chains
Förderketten mit verzahnten Laschen

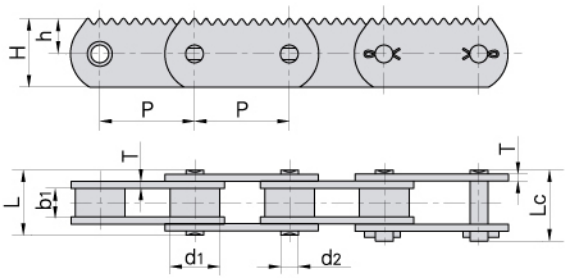

Donghua Chain No. *Donghua Ketten Nr.*	P	h	H
	mm	mm	mm
P80	80.0	30	58

Donghua Chain No. *Donghua Ketten Nr.*	Pitch *Teilung*	Roller diameter *Rollen-durch-messer*	Width between inner plates *Innere Breite*	Pin diameter *Bolzen-durch-messer*	Pin length *Bolzen-länge*		Plate thickness *Laschen-dicke*	Ultimate tensile strength *Min. Bruchkraft*	Average tensile strength *Durchschn. Bruchkraft*	Weight per meter *Gewicht*
	P	d_1 max	b_1 min	d_2 max	L max	Lc max	T max	Q min	Q_0	q
	mm	mm	mm	mm	mm	mm	mm	kN/LB	kN	kg/m
P80	80.0	42.0	24.0	15.0	55.0	60.0	6.0	250.0/56818	275.0	11.3

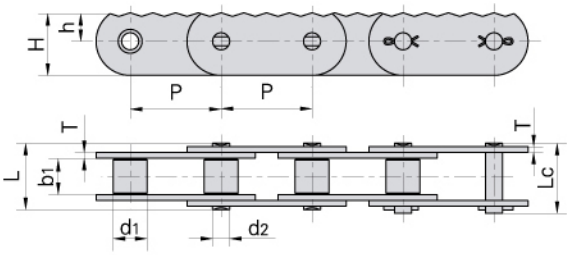

Donghua Chain No. *Donghua Ketten Nr.*	P	h	H
	mm	mm	mm
P80F3	80.0	25	55
P80F32	80.0	20	40

Donghua Chain No. *Donghua Ketten Nr.*	Pitch *Teilung*	Roller diameter *Rollen-durch-messer*	Width between inner plates *Innere Breite*	Pin diameter *Bolzen-durch-messer*	Pin length *Bolzen-länge*		Plate thickness *Laschen-dicke*	Ultimate tensile strength *Min. Bruchkraft*	Average tensile strength *Durchschn. Bruchkraft*	Weight per meter *Gewicht*
	P	d_1 max	b_1 min	d_2 max	L max	Lc max	T max	Q min	Q_0	q
	mm	mm	mm	mm	mm	mm	mm	kN/LB	kN	kg/m
P80F3	80.0	30.0	32.0	15.0	58.6	62.6	5.0	98.0/20909	107.0	9.12
P80F32	80.0	30.0	30.0	15.0	63.0	72.0	6.0	112/25194	123.2	7.28

Sharp top chains
Förderketten mit verzahnten Laschen

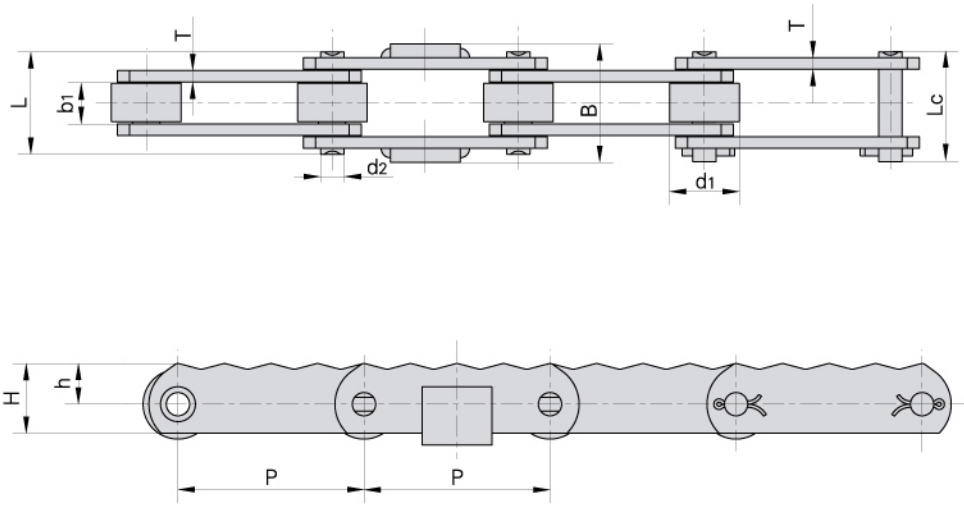

Donghua Chain No. *Donghua Ketten Nr.*	P	h	H	B
	mm	mm	mm	mm
P80F2	80.0	17.5	30.0	51

Donghua Chain No. *Donghua Ketten Nr.*	Pitch *Teilung*	Roller diameter *Rollen-durch-messer*	Width between inner plates *Innere Breite*	Pin diameter *Bolzen-durch-messer*	Pin length *Bolzen-länge*		Plate thickness *Laschen-dicke*	Ultimate tensile strength *Min. Bruchkraft*	Average tensile strength *Durchschn. Bruchkraft*	Weight per meter *Gewicht*
	P	d_1 max	b_1 min	d_2 max	L max	Lc max	T max	Q min	Q_0	q
	mm	mm	mm	mm	mm	mm	mm	kN/LB	kN	kg/m
P80F2	80.0	30.0	18.0	10.0	44.6	48.3	5.0	61.74/14030	70.0	4.15

ROLLER CHAIN WITH VULCANISED ELASTOMER PROFILES

ROLLENKETTEN MIT AUFVULKANISIERTEM GUMMIPROFII



Roller chain with vulcanised elastomer profiles
Rollenketten mit aufvulkanisiertem Gummiprofil



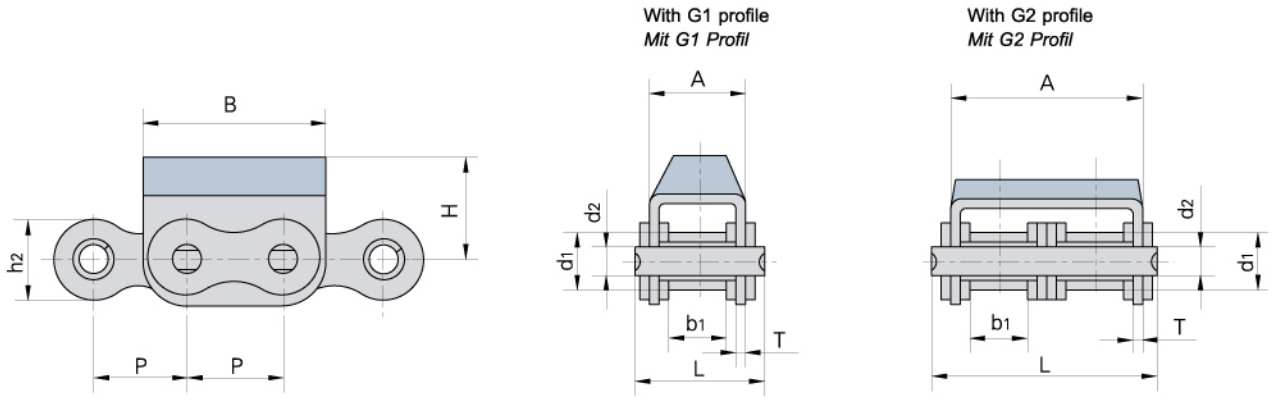

Donghua Chain No. *Donghua Ketten Nr.*	Pitch *Teilung*	Roller diameter *Rollen-durch-messer*	Width between inner plates *Innere Breite*	Pin diameter *Bolzen-durch-messer*	Pin length *Bolzen-länge*	Plate and attachment dimension *Laschen- und Befestigungslaschen-abmessungen*					Ultimate tensile strength *Min. Bruchkraft*	Weight per meter *Gewicht*
	P	d_1 max	b_1 min	d_2 max	L max	h_2 max	A	B	H	T	Q min	q
	mm	mm	mm	mm	mm	mm	mm	mm	mm	mm	kN/LB	kg/m
08B–G1	12.700	8.51	7.75	4.45	20.0	11.8	14.6	24.2	12.3	1.60	18.0/4091	1.19
08B–G2	12.700	8.51	7.75	4.45	34.3	11.8	28.4	24.2	12.3	1.50	32.0/7273	2.07
10A–G1	15.875	10.16	9.40	5.08	24.5	15.09	17.5	31.0	17.0	1.60	21.8/4953	1.70
10B–G1	15.875	10.16	9.65	5.08	23.2	14.7	16.8	30.0	17.0	1.60	19.0/4318	1.62
10B–G2	15.875	10.16	9.65	5.08	39.7	14.7	33.3	30.0	17.0	1.50	44.5/10114	2.56
12B–G1	19.050	12.07	11.68	5.72	25.7	16.0	19.6	36.0	21.0	1.85	29.0/6591	2.01
12B–G2	19.050	12.07	11.68	5.72	45.3	16.0	39.1	36.0	16.0	1.85	57.8/13136	3.21
12A–G1	19.050	11.91	12.57	5.94	29.9	18.0	21.4	37.1	21.0	1.85	31.8/7153	2.55
12AF1–G1	19.050	11.91	17.00	5.94	34.0	18.0	26.0	36.0	16.0	1.85	31.8/7153	2.62
16A–G1	25.400	15.88	15.75	7.92	37.2	24.0	27.5	46.0	20.0	2.42	42.0/9545	3.97
16A–G2	25.400	15.88	15.75	7.92	68.0	24.0	57.2	46.0	20.0	2.42	84/18896	7.27
16B–G1	25.400	15.88	17.02	8.28	39.7	21.0	29.1	49.0	21.4	1.60	58.0/13047	3.83
20A–G1	31.750	19.05	18.90	9.53	46.8	30.0	34.0	57.6	28.0	3.10	86.7/19503	6.15
20B–G1	31.750	19.05	19.56	10.19	48.0	26.4	36.0	57.0	27.0	3.50	85.0/19318	6.19
24B–G1	38.100	25.40	25.40	14.63	61.6	33.2	47.0	72.6	34.0	4.50	160.0/36363	11.25

Roller chain with vulcanised elastomer profiles
Rollenketten mit aufvulkanisiertem Gummiprofil

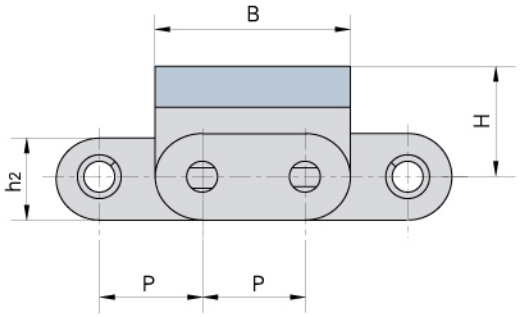

With G1 profile
Mit G1 Profil

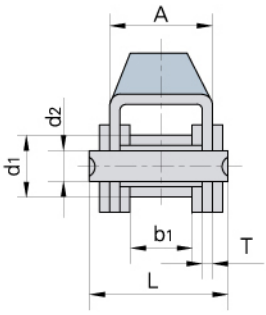

With G2 profile
Mit G2 Profil

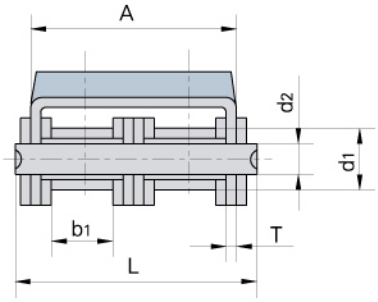

Donghua Chain No. *Donghua Ketten Nr.*	Pitch *Teilung*	Roller diameter *Rollen-durch-messer*	Width between inner plates *Innere Breite*	Pin diameter *Bolzen-durch-messer*	Pin length *Bolzen-länge*	Plate and attachment dimension *Laschen- und Befestigungslaschen-abmessungen*					Ultimate tensile strength *Min. Bruchkraft*	Weight per meter *Gewicht*
	P	d_1 max	b_1 min	d_2 max	L max	h_2 max	A	B	H	T	Q min	q
	mm	mm	mm	mm	mm	mm	mm	mm	mm	mm	kN/LB	kg/m
C08B–G1	12.700	8.51	7.75	4.45	20.0	11.80	14.60	24.2	12.3	1.60	18.0/4091	1.30
C08B–G2	12.700	8.51	7.75	4.45	34.3	11.80	28.40	24.2	12.3	1.50	32.0/7273	2.29
C10B–G1	15.875	10.16	9.65	5.08	23.2	14.70	16.80	30.0	17.0	1.60	19.0/4318	1.75
C10B–G1F1	15.875	10.16	9.65	5.08	23.2	14.70	16.80	30.0	13.0	1.60	19.0/4318	1.70
C50–G2F1	15.875	10.16	9.40	5.08	42.5	15.09	35.60	27.0	17.0	1.60	43.6/9906	2.14
C50–G2	15.875	10.16	9.40	5.08	42.5	15.09	35.60	31.0	17.0	1.60	43.6/9906	2.14
C10B–G2	15.875	10.16	9.65	5.08	39.7	14.70	33.30	30.0	17.0	1.50	44.5/10114	2.95
C12B–G1	19.050	12.07	11.68	5.72	25.7	16.00	19.60	36.0	21.0	1.85	29.0/6591	2.15
C12B–G2	19.050	12.07	11.68	5.72	45.3	16.00	39.10	36.0	16.0	1.85	57.8/13136	3.48
C16A–G1	25.400	15.88	15.75	7.92	37.2	24.00	27.50	46.0	20.0	2.42	42.0/9545	4.34
C16B–G1	25.400	15.88	17.02	8.28	39.7	21.00	29.05	49.0	21.4	1.60	58.0/13047	4.11
C20B–G1	31.750	19.05	19.56	10.19	48.0	26.40	36.00	57.0	27.0	3.50	85.0/19318	6.65
C24B–G1	38.100	25.40	25.40	14.63	61.6	33.20	47.00	72.6	34.0	4.50	160.0/36363	11.63

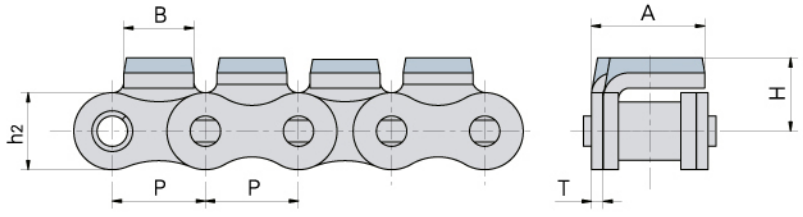

Donghua Chain No. *Donghua Ketten Nr.*	P	A	B	H	h_2	T
	mm	mm	mm	mm	mm	mm
16B–G1F7	25.4	31.0	19.1	20	21	3.1

Roller chain with vulcanised elastomer profiles
Rollenketten mit aufvulkanisiertem Gummiprofil

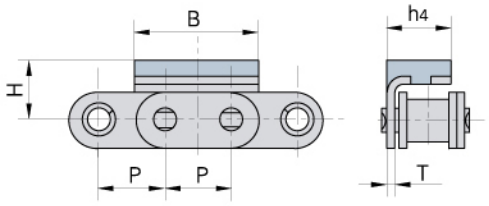

Donghua Chain No. *Donghua Ketten Nr.*	P	B	H	h4	T
	mm	mm	mm	mm	mm
06BF9	9.525	17.73	9.0	9.05	1.3

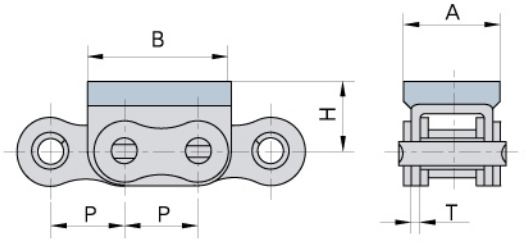

Donghua Chain No. *Donghua Ketten Nr.*	P	A	B	H	T
	mm	mm	mm	mm	mm
08B–G1F1	12.700	18.0	24.2	12.3	1.6
10B–G1F2	15.875	25.0	30.0	14.0	1.6
10B–G1F3	15.875	20.0	30.0	18.0	1.6
10B–G1F4	15.875	18.6	30.0	11.4	1.6

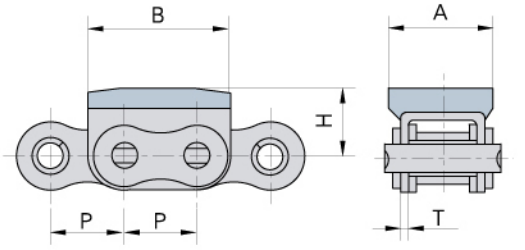

Donghua Chain No. *Donghua Ketten Nr.*	P	A	B	H	T
	mm	mm	mm	mm	mm
08B–G1F4	12.7	18.0	24.2	12.3	1.6

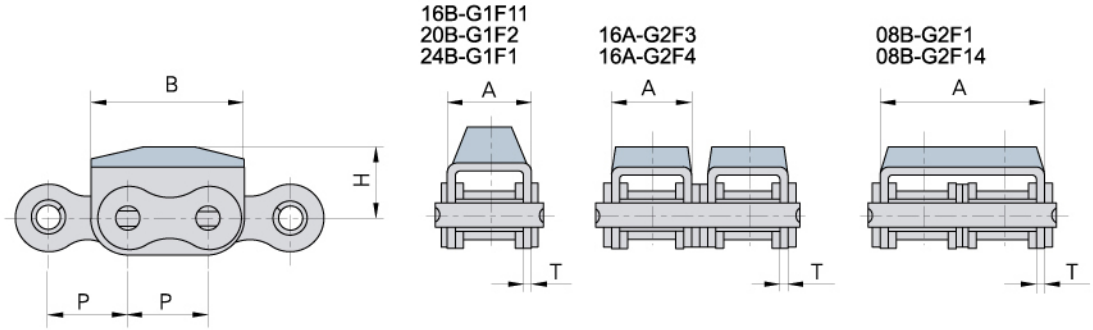

Donghua Chain No. *Donghua Ketten Nr.*	P	A	B	H	T
	mm	mm	mm	mm	mm
08B–G2F1	12.70	28.4	24.2	12.0	1.50
08B–G2F14	12.70	14.6	24.2	16.0	1.60
16A–G2F3	25.40	27.5	49.0	21.4	2.42
16A–G2F4	25.40	27.0	49.2	20.0	2.03
16B–G1F11	25.40	29.5	49.0	21.4	1.60
20B–G1F2	31.75	36.0	57.0	35.0	3.50
24B–G1F1	38.10	47.0	72.6	34.0	4.50

Roller chain with vulcanised elastomer profiles
Rollenketten mit aufvulkanisiertem Gummiprofil

Donghua Chain No. *Donghua Ketten Nr.*	P	A	B	H	T
	mm	mm	mm	mm	mm
12B–G1F1	19.05	19.6	36.0	18.0	1.85

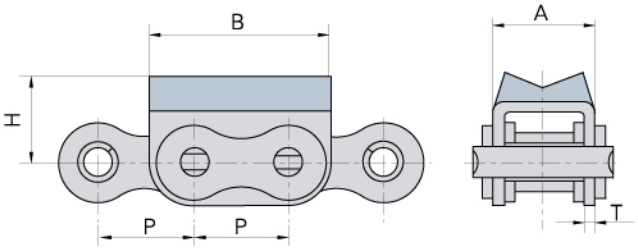

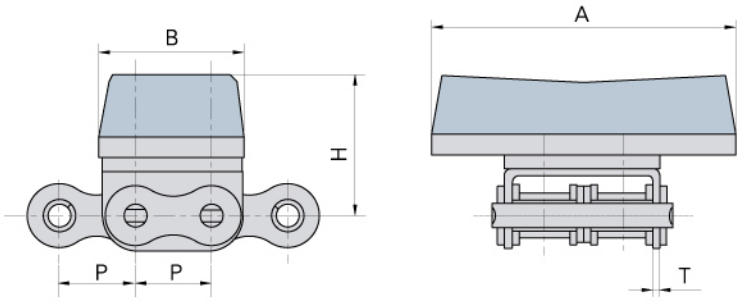

Donghua Chain No. *Donghua Ketten Nr.*	P	A	B	H	T
	mm	mm	mm	mm	mm
08B–G2F13	12.70	35.0	24.2	14.0	1.50
12B–G2F3	19.05	77.0	37.0	36.0	1.85
12B–G2F8	19.05	101.0	37.0	36.0	1.85

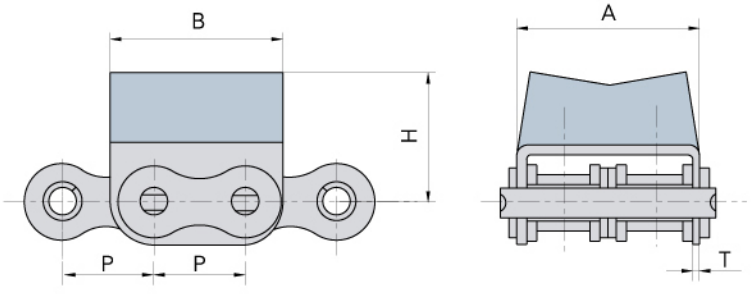

Donghua Chain No. *Donghua Ketten Nr.*	P	A	B	H	T
	mm	mm	mm	mm	mm
08B–G2F11	12.70	28.4	24.2	18.3	1.50
12B–G2F4	19.05	39.1	36.0	27.5	1.85

Roller chain with vulcanised elastomer profiles
Rollenketten mit aufvulkanisiertem Gummiprofil

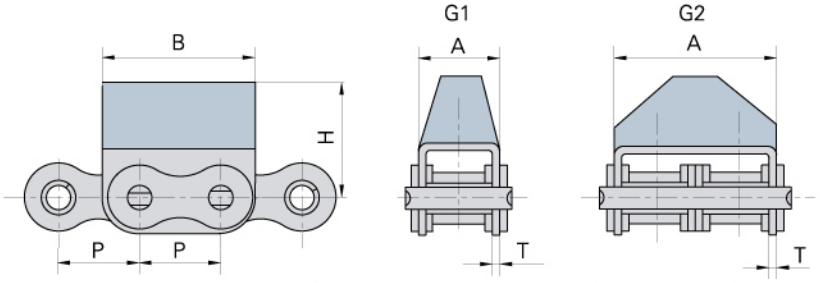

Donghua Chain No. *Donghua Ketten Nr.*	P	A	B	H	T
	mm	mm	mm	mm	mm
10B–G1F5	15.875	16.80	30.0	25.3	1.70
10A–G1F6	15.875	16.80	30.0	14.0	1.60
12B–G1F11	19.050	19.60	36.0	17.0	1.85
12A–G1F12	19.050	39.10	36.0	21.0	1.85
12B–G2F10	19.050	39.10	36.0	28.0	1.85
12A–G2F12	19.050	39.10	36.0	21.0	1.85
12B–G2F5	19.050	39.10	36.0	28.0	1.85
16A–G1F1	25.400	27.50	46.0	21.4	2.42
16B–G1F18	25.400	29.05	49.0	32.0	1.60
20B–G1F1	31.750	36.00	57.0	35.0	3.50

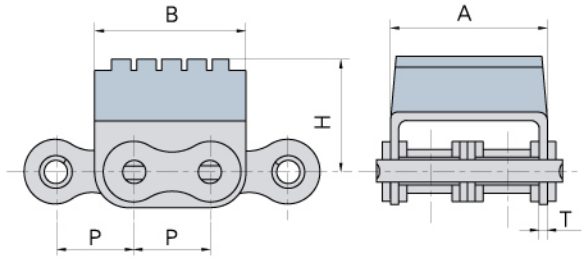

Donghua Chain No. *Donghua Ketten Nr.*	P	A	B	H	T
	mm	mm	mm	mm	mm
08B–G2F10	12.70	28.4	24.2	23.3	1.50
12B–G2F6	19.05	39.1	37.3	28.2	1.85

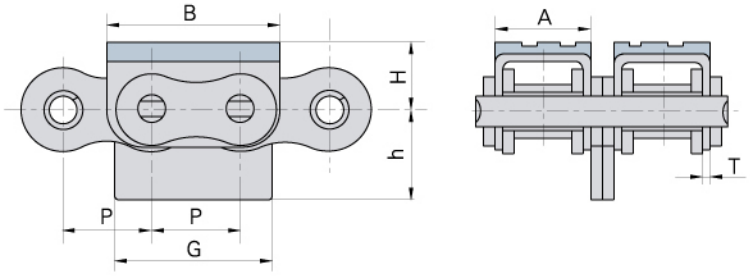

Donghua Chain No. *Donghua Ketten Nr.*	P	A	B	G	h	H	T
	mm	mm	mm	mm	mm	mm	mm
16A–G2F1	25.4	27.0	49.2	45.4	25.0	20.0	2.03

Roller chain with vulcanised elastomer profiles
Rollenketten mit aufvulkanisiertem Gummiprofil

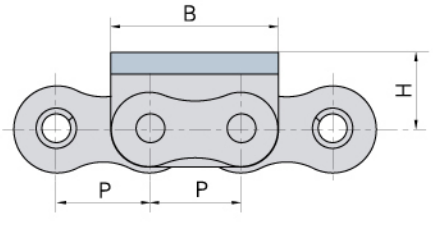

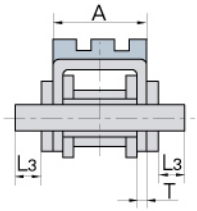

Donghua Chain No. *Donghua Ketten Nr.*	P	A	B	L3	H	T
	mm	mm	mm	mm	mm	mm
16A–G1F3	25.4	27.5	49.0	8.25	21.4	2.42

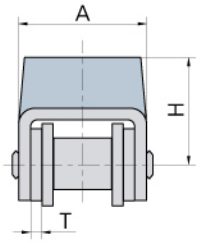

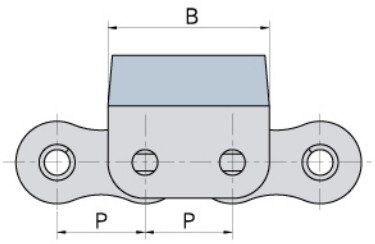

Donghua Chain No. *Donghua Ketten Nr.*	P	A	B	H	T
	mm	mm	mm	mm	mm
24A–G1F1	38.1	55.5	70	46.5	4.8

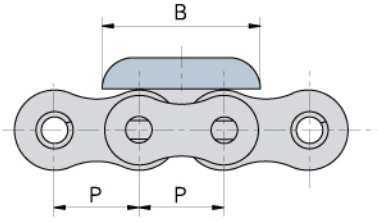

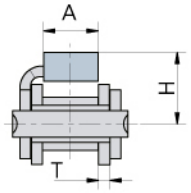

Donghua Chain No. *Donghua Ketten Nr.*	P	A	B	H	T
	mm	mm	mm	mm	mm
12A–G1F1	19.05	13.0	35.5	16.6	2.42

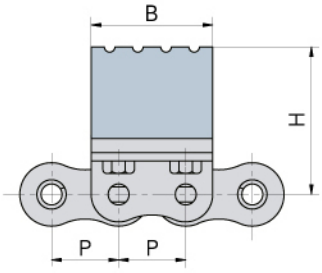

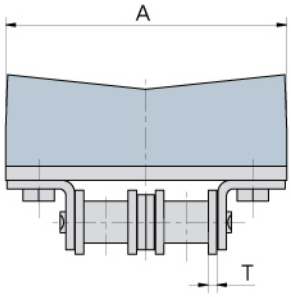

Donghua Chain No. *Donghua Ketten Nr.*	P	A	B	H	T
	mm	mm	mm	mm	mm
12AWK2–G2F1	19.05	80.0	35.0	41.9	2.42

Roller chain with U type attchments
Rollenketten mit Sonder-Anbauteilen, U-Bügel

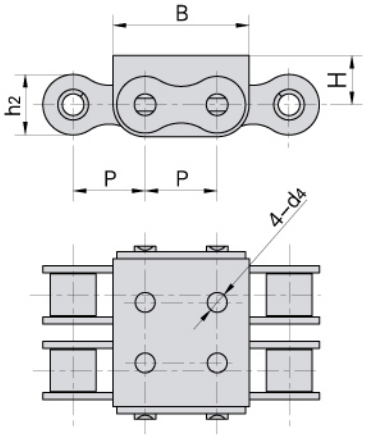

With U1 profile
Mit U1 Profil

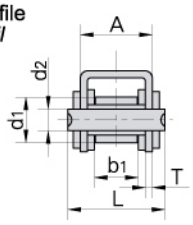

With U2 profile
Mit U2 Profil

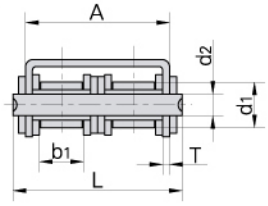

Donghua Chain No. *Donghua Ketten Nr.*	Pitch *Teilung*	Roller diameter *Rollen-durch-messer*	Width between inner plates *Innere Breite*	Pin diameter *Bolzen-durch-messer*	Pin length *Bolzen-länge*	Plate and attachment dimension *Laschen- und Befestigungslaschen-abmessungen*						Ultimate tensile strength *Min. Bruchkraft*	Weight per meter *Gewicht*
	P	d_1 max	b_1 min	d_2 max	L max	h_2 max	A	B	H	d_4	T	Q min	q
	mm	mm	mm	mm	mm	mm	mm	mm	mm	mm	mm	kN/LB	kg/m
08B–U1	12.700	8.51	7.75	4.45	20.0	11.8	14.60	24.2	8.3	4	1.60	18.0/4091	1.13
08B–U2	12.700	8.51	7.75	4.45	34.3	11.8	28.40	24.2	8.3	4	1.50	32.0/7273	1.96
08B–U2F9	12.700	8.51	7.75	4.45	47.9	12.0	28.40	26.0	8.3	4	1.50	29.0/6589	2.00
10B–U1	15.875	10.16	9.65	5.08	23.2	14.7	16.80	30.0	11.3	5	1.60	19.0/4318	1.53
10B–U2	15.875	10.16	9.65	5.08	39.7	14.7	33.30	30.0	11.3	5	1.50	44.5/10114	2.47
12B–U1	19.050	12.07	11.68	5.72	25.7	16.0	19.60	36.0	13.0	5	1.85	29.0/6591	1.90
12B–U2	19.050	12.07	11.68	5.72	45.3	16.0	39.10	36.0	12.0	5	1.85	57.8/13136	3.03
16A–U1	25.400	15.88	15.75	7.92	37.2	24.0	27.50	46.0	16.0	7	2.42	42.0/9545	3.87
16B–U1	25.400	15.88	17.02	8.28	39.7	21.0	29.05	49.0	15.4	6	1.60	58.0/13407	3.73
16B–U2	25.400	15.88	17.02	8.28	71.7	21.0	60.93	49.0	16.2	–	1.60	106/26094	6.15
20BF2	31.750	19.05	19.56	10.19	48.0	26.4	36.00	57.0	21.0	8	3.50	85.0/19318	6.01
20B–U1	31.750	19.05	19.56	10.19	48.0	26.4	36.00	57.0	21.0	–	3.50	85.0/19318	6.00
24B–U1	38.100	25.40	25.40	14.63	61.6	33.2	47.00	72.6	28.0	10	4.50	160.0/36363	10.88

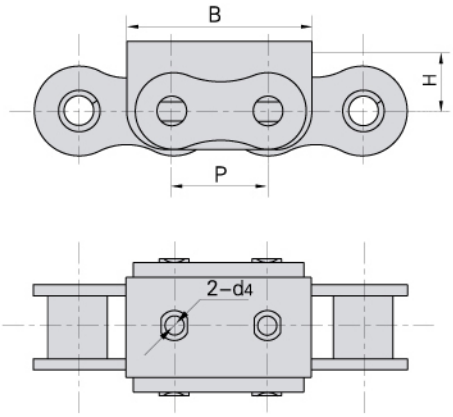

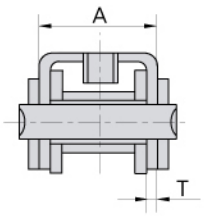

Donghua Chain No. *Donghua Ketten Nr.*	P	A	B	d_4	H	T
	mm	mm	mm	mm	mm	mm
10B–U1F1	15.875	16.8	30.0	M5	11.30	1.60
10B–U1F7	15.875	16.8	30.0	–	10.30	1.60
12B–U1F10	19.050	19.6	36.0	M5	13.00	1.85
16A–U1F2	25.400	27.3	49.5	M6	16.45	2.30
16B–U1F3	25.400	30.3	49.5	M6	16.45	2.30
16B–U1F4	25.400	29.8	47.8	M5	15.00	2.00
16A–U1F7	25.400	27.3	49.5	M6	16.45	2.30
24B–U1F4	38.100	47.0	72.6	–	28.00	4.50
C24B–U1	38.100	47.0	72.6	10	28.45	4.50

Roller chain with U type attchments
Rollenketten mit Sonder-Anbauteilen, U-Bügel

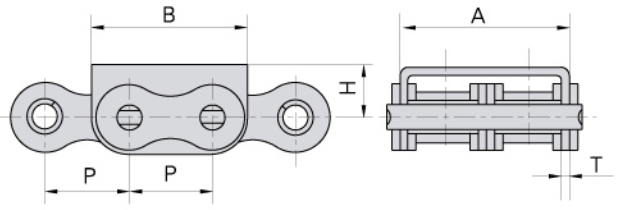

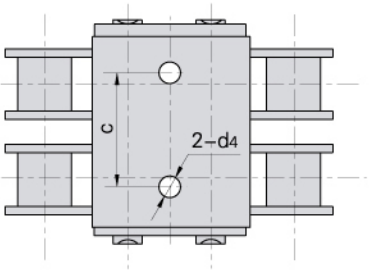

Donghua Chain No. / *Donghua Ketten Nr.*	P	A	B	C	d4	H	T
	mm	mm	mm	mm	mm	mm	mm
08B–U2F2	12.700	28.4	24.2	17.5	3.3	8.3	1.50
10A–U2F1	15.875	36.5	29.0	17.5	3.3	12.0	2.03
12B–U2F7	19.050	38.9	36.0	17.5	3.3	13.2	1.85
24B–U1F4	38.100	47.0	72.6	17.5	3.3	28.0	4.50

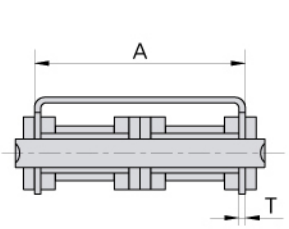

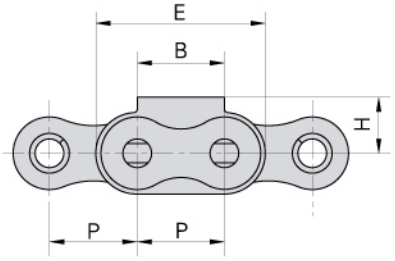

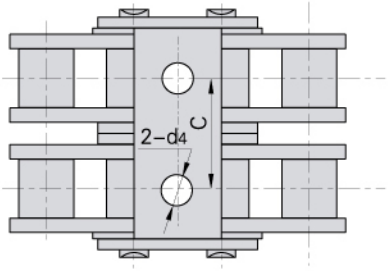

Donghua Chain No. / *Donghua Ketten Nr.*	P	A	B	C	d4	E	H	T
	mm	mm	mm	mm	mm	mm	mm	mm
16B–U2F1	25.4	60.93	25.0	33.5	9.0	49.0	16.2	1.6

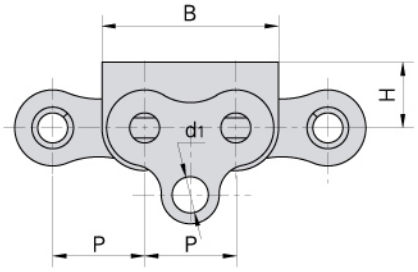

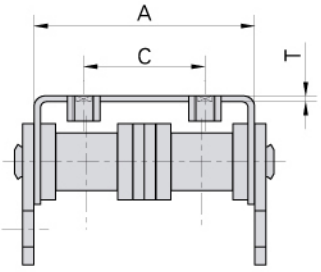

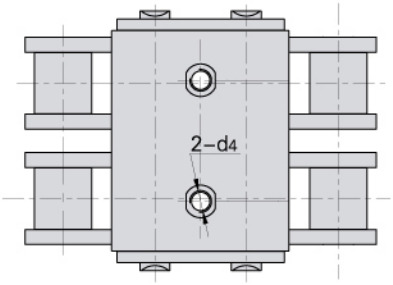

Donghua Chain No. / *Donghua Ketten Nr.*	P	A	B	d4	H	T	C	d1
	mm	mm	mm	mm	mm	mm	mm	mm
16B–U2F2	25.4	60.93	49	M6	18.2	1.6	33.5	10
16B–U2F3	25.4	60.93	49	M6	16.2	1.6	33.5	10

Roller chain with plastic attachments
Rollenketten mit Traglaschen aus Kunststoff

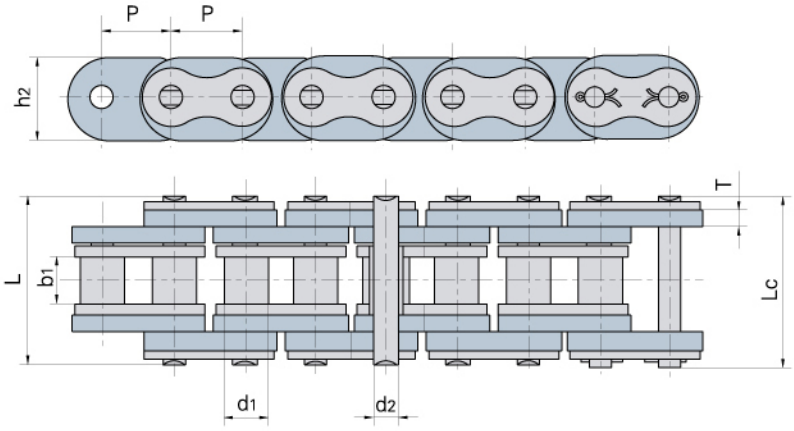

Donghua Chain No. *Donghua Ketten Nr.*	Pitch *Teilung*	Roller diameter *Rollen-durch-messer*	Width between inner plates *Innere Breite*	Pin diameter *Bolzen-durch-messer*	Pin length *Bolzen-länge*		Plate and attachment dimension *Laschen- und Befestigungslaschen-abmessungen*		Ultimate tensile strength *Min. Bruchkraft*	Weight per meter *Gewicht*
	P	d_1 max	b_1 min	d_2 max	L max	Lc max	h_2	T	Q min	q
	mm	mm	mm	mm	mm	mm	mm	mm	kN/LB	kg/m
16BF9	25.4	15.88	17.02	8.28	61.0	64.2	30.0	6.0	22.0/4949	3.7

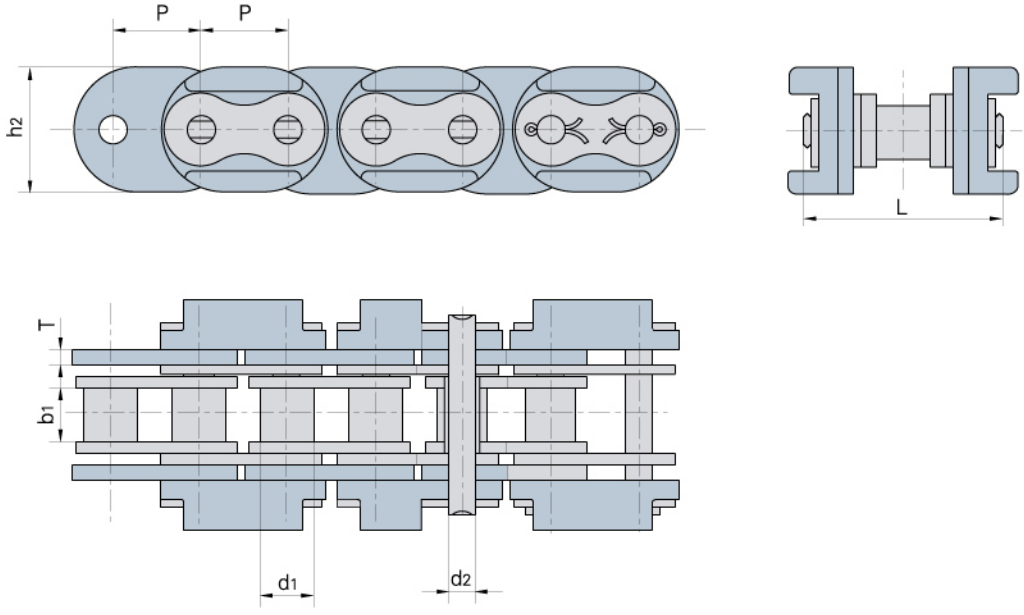

Donghua Chain No. *Donghua Ketten Nr.*	Pitch *Teilung*	Roller diameter *Rollen-durch-messer*	Width between inner plates *Innere Breite*	Pin diameter *Bolzen-durch-messer*	Pin length *Bolzen-länge*	Plate and attachment dimension *Laschen- und Befestigungslaschen-abmessungen*		Ultimate tensile strength *Min. Bruchkraft*	Weight per meter *Gewicht*
	P	d_1 max	b_1 min	d_2 max	L max	h_2 max	T	Q min	q
	mm	mm	mm	mm	mm	mm	mm	kN/LB	kg/m
20BF6	31.75	19.05	19.56	10.19	73.7	45.0	6.0	95.0/21591	6.35

Plastic chains
Rollenketten mit Innengliedern aus Kunststoff

Engineering plastic inner link light-duty conveyor chians
Leichte Förderketten mit Innengliedern aus technischem Kunststoff



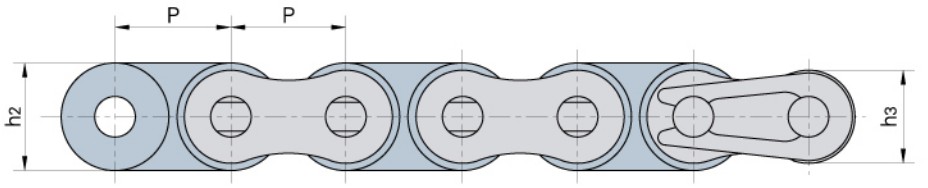

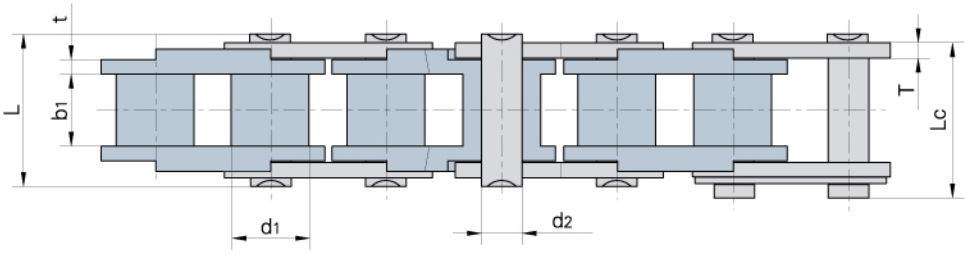

Donghua Chain No. *Donghua Ketten Nr.*	Pitch *Teilung*	Roller diameter *Rollen-durch-messer*	Width between inner plates *Innere Breite*	Pin diameter *Bolzen-durch-messer*	Pin length *Bolzen-länge*		Plate depth *Laschen-höhe*		Plate thickness *Laschen-dicke*	Ultimate tensile strength *Min. Bruchkraft*
	P	d_1 max	b_1 min	d_2 max	L max	Lc max	h_2 max	h_3 max	t/T	Q min
	mm	mm	mm	mm	mm	mm	mm	mm	mm	kN/LB
04CSPa	6.350	3.30	3.10	2.31	7.9	8.4	6.0	5.06	0.80	0.6/136
06CSPa	9.525	5.08	4.68	3.58	12.4	13.2	9.0	7.80	1.30	1.1/250
08ASPa	12.700	7.92	7.85	3.96	16.6	17.8	12.0	10.40	1.50	2.5/568
10ASPa	15.875	10.16	9.40	5.08	20.7	22.2	15.1	13.00	2.03	3.5/795
12ASpa	19.050	11.91	12.57	5.94	25.9	27.7	18.0	15.60	2.42	4.5/1023
16ASpa	25.400	15.88	15.75	7.92	32.7	35.0	24.0	20.50	3.25	7.5/1023
08BSPa	12.700	8.51	7.75	4.45	16.7	18.2	11.8	10.60	1.60	2.5/568
10BSPa	15.875	10.16	9.65	5.08	19.5	20.9	14.7	13.70	1.70	3.5/795
12BSpa	19.050	12.07	11.68	5.72	22.5	24.2	16.0	15.00	1.85	4.2/1023
16BSpa	25.400	15.88	17.02	8.28	36.1	37.4	21.0	21.00	4.15/3.1	7.5/1023

Plastic chains
Rollenketten mit Innengliedern aus Kunststoff

Engineering plastic inner link light-duty conveyor chians
Leichte Förderketten mit Innengliedern aus technischem Kunststoff

D–1

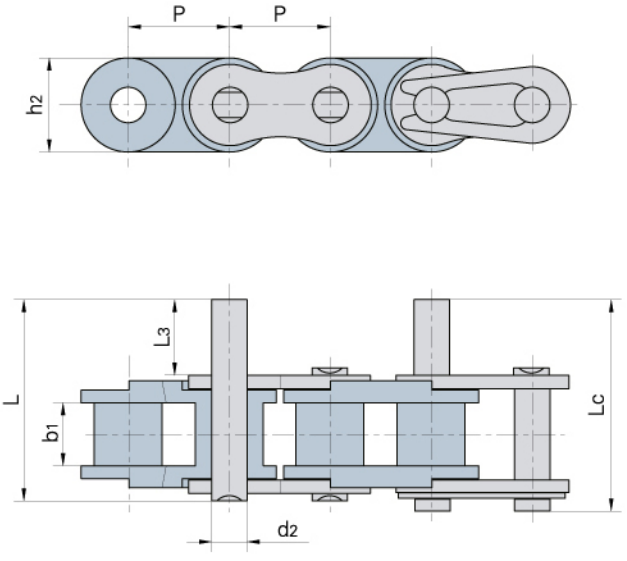

D–3

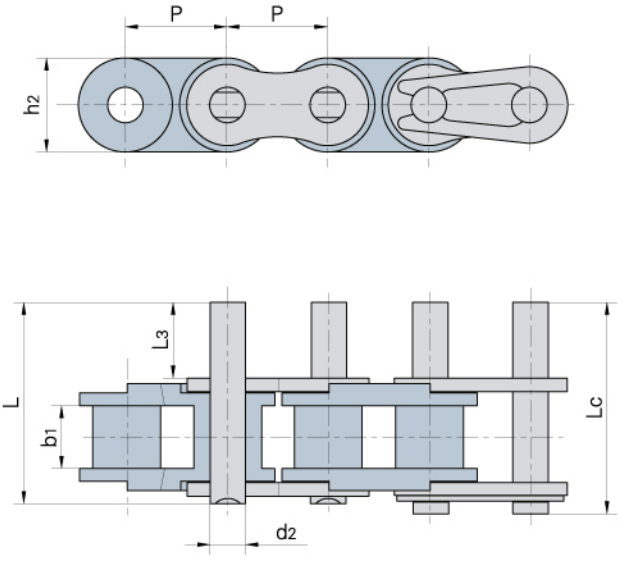

Donghua Chain No. *Donghua Ketten Nr.*	P	b_1	d_2	h_2	L_3	L	Lc
	mm	mm	mm	mm	mm	mm	mm
06CSPa	9.525	4.68	3.58	9.0	9.5	20.8	21.6
08ASPa	12.700	7.85	3.96	12.0	9.5	25.1	26.2
10ASPa	15.875	9.40	5.08	15.1	11.9	31.3	33.1
12ASpa	19.050	12.57	5.94	18.0	14.3	38.6	40.6
16ASpa	25.400	15.75	7.92	24.0	19.1	50.3	53.3
08BSPa	12.700	7.75	4.45	11.8	9.5	25.1	26.6
10BSPa	15.875	9.65	5.08	14.7	11.9	30.1	31.5
12BSpa	19.050	11.68	5.72	16.0	14.3	35.4	37.1
16BSpa	25.400	17.02	8.28	21.0	19.1	53.0	54.3

Plastic chains
Ketten aus Kunststoff



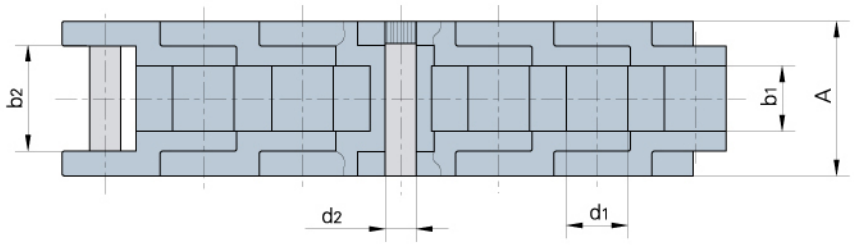

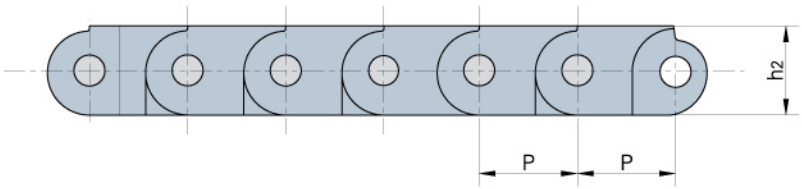

Donghua Chain No. *Donghua Ketten Nr.*	P	b1	b2	d2	d1	A	h2	Max. zulässige Last *Max allowed load*
	mm	mm	mm	mm	mm	mm	mm	KN
PD60	19.05	12.7	20.7	6	11.94	30	17.3	0.88

Roller chain with plastic rollers
Rollenketten mit Rollen aus Kunststoff

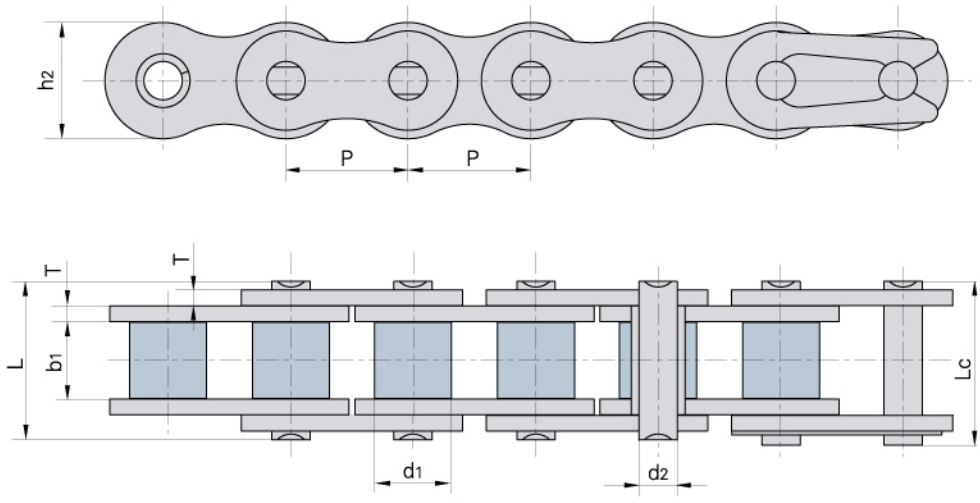

Donghua Chain No. *Donghua Ketten Nr.*	Pitch *Teilung*	Roller diameter *Rollen-durch-messer*	Width between inner plates *Innere Breite*	Pin diameter *Bolzen-durch-messer*	Pin length *Bolzen-länge*		Inner plate depth *Innere Laschen-höhe*	Plate thickness *Laschen-dicke*	Ultimate tensile strength *Min. Bruchkraft*	Average tensile strength *Durchschn. Bruchkraft*	Weight per meter *Gewicht*
	P	d_1 max	b_1 min	d_2 max	L max	Lc max	h_2 max	T	Q min	Q_0	q
	mm	mm	mm	mm	mm	mm	mm	mm	kN/LB	kN	kg/m
40–P	12.700	7.95	7.85	3.96	16.60	17.80	12.00	1.50	14.10/3205	17.5	0.56
50–P	15.875	10.16	9.40	5.08	20.70	22.20	15.09	2.03	22.20/5045	29.4	0.96
60–P	19.050	11.91	12.57	5.94	25.90	27.70	18.00	2.42	31.80/7227	41.5	1.35
80–P	25.400	15.88	15.75	7.92	32.70	35.00	24.00	3.25	56.70/12886	69.4	2.26
A2050–P	31.750	10.16	9.40	5.08	20.70	22.20	15.00	2.03	22.2/5045	28.1	0.61

VARIOUS CONVEYOR CHAINS
VERSCHIEDENE FÖRDERKETTEN

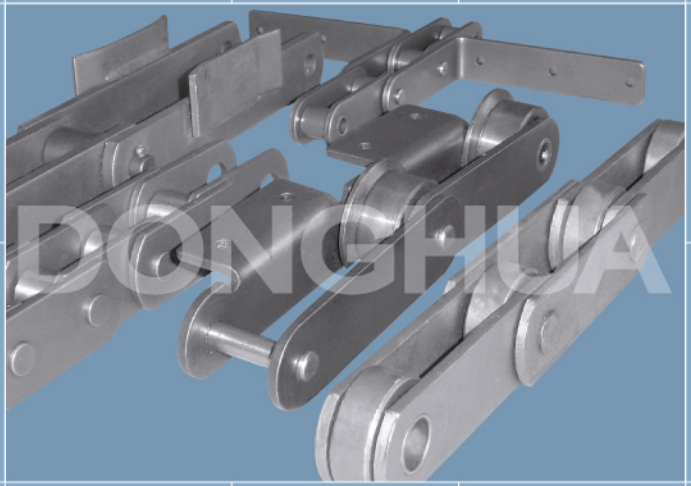

Conveyor chains (M series)
Förderketten (M Serie)

1.without rollers
1.*ohne Rollen*

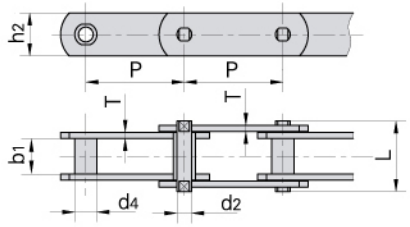

2.with S small rollers type
2.*mit S-Schonrollen*

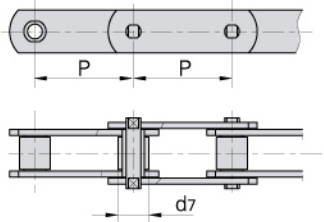

3.with P large rollers type
3.*mit P-Laufrollen*

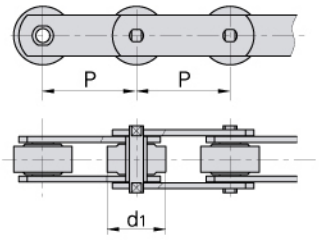

4.with F flanged rollers type
4.*mit F-Bundlaufrolle*

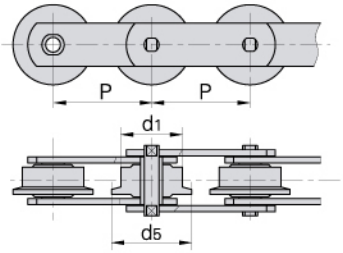

5.Welded pins with plates
5.*an den Laschen geschweißte Nietbolzen*

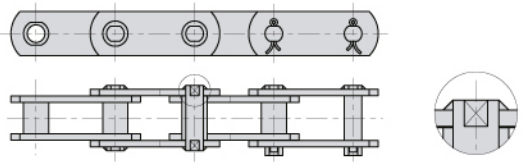

ISO Chain No. *ISO Ketten Nr.*	Pitch *Teilung* P mm								Roller diameter *Rollen-durchmesser* d1 max mm	d7 max mm	d5 max mm	Bush diameter *Buchsen-durchmesser* d4 max mm
M20	*40.0	50.0	63.0	80.0	100.0	125.0	160.0		25.0	12.5	32.0	9.0
M28	*50.0	63.0	80.0	100.0	125.0	160.0	200.0		30.0	15.0	36.0	10.0
M40	63.0	80.0	100.0	125.0	160.0	200.0	250.0		36.0	18.0	42.0	12.5
M56	*63.0	80.0	100.0	125.0	160.0	200.0	250.0		42.0	21.0	50.0	15.0
M80	80.0	100.0	125.0	160.0	200.0	250.0	315.0		50.0	25.0	60.0	18.0
M112	*80.0	100.0	125.0	160.0	200.0	250.0	315.0	400.0	60.0	30.0	70.0	21.0
M160	*100.0	125.0	160.0	200.0	250.0	315.0	400.0	500.0	70.0	36.0	85.0	25.0
M224	*125.0	160.0	200.0	250.0	315.0	400.0	500.0	630.0	85.0	42.0	100.0	30.0
M315	*160.0	200.0	250.0	315.0	400.0	500.0	630.0		100.0	50.0	120.0	36.0
M450	200.0	250.0	315.0	400.0	500.0	630.0	800.0		120.0	60.0	140.0	42.0

ISO Chain No. *ISO Ketten Nr.*	Width between inner plates *Innere Breite* b1 min mm	Pin diameter *Bolzen-durchmesser* d2 max mm	Pin length *Bolzen-länge* L max mm	Plate depth *Laschen-höhe* h2 max mm	Plate thickness *Laschen-dicke* T max mm	Ultimate tensile strength *Min. Bruchkraft* Q min kN/LB	Average tensile strength *Durchschn. Bruchkraft* Q0 kN
M20	16.0	6.0	35.0	19.0	2.5	20.0/4545	25.0
M28	18.0	7.0	40.0	21.0	3.0	28.0/6364	35.0
M40	20.0	8.5	45.0	26.0	3.5	40.0/9091	50.0
M56	24.0	10.0	52.0	31.0	4.0	56.0/12727	70.0
M80	28.0	12.0	62.0	36.0	5.0	80.0/18182	100.0
M112	32.0	15.0	73.0	41.0	6.0	112.0/25454	140.0
M160	37.0	18.0	85.0	51.0	7.0	160.0/36364	200.0
M224	43.0	21.0	98.0	62.0	8.0	224.0/50909	280.0
M315	48.0	25.0	112.0	72.0	10.0	315.0/71591	393.7
M450	56.0	30.0	135.0	82.0	12.0	450.0/102272	562.5

*Chain has bush and small roller only
**Ketten nur mit Buchsen und Schonrollen.*

Conveyor chains (M series)
Förderketten (M Serie)

DIN Chain No. *DIN Ketten Nr.*	Pitch *Teilung*							Roller diameter *Rollen-durchmesser*			Bush diameter *Buchsen-durch-messer*
	P							d_1 max	d_7 max	d_5 max	d_4 max
	mm							mm	mm	mm	mm
M20	40.0	50.0	63.0	80.0	100.0	125.0	160.0	25.0	12.50	30.00	9.0
M28	50.0	63.0	80.0	100.0	125.0	160.0	200.0	30.0	15.00	36.00	10.0
M40	63.0	80.0	100.0	125.0	160.0	200.0	250.0	36.0	18.00	42.00	12.5
M56	63.0	80.0	100.0	125.0	160.0	200.0	250.0	42.0	21.00	50.00	15.0
M80	80.0	100.0	125.0	160.0	200.0	250.0	315.0	50.0	25.00	60.00	18.0
M112	80.0	100.0	125.0	160.0	200.0	250.0	315.0	60.0	30.00	70.00	21.0
M160	100.0	125.0	160.0	200.0	250.0	315.0	400.0	70.0	36.00	85.00	25.0
M224	125.0	160.0	200.0	250.0	315.0	400.0	500.0	85.0	42.00	100.00	30.0
M315	160.0	200.0	250.0	315.0	400.0	500.0	630.0	100.0	50.00	120.00	36.0
M450	200.0	250.0	315.0	400.0	500.0	630.0	800.0	120.0	60.00	140.00	42.0

DIN Chain No. *DIN Ketten Nr.*	Width between inner plates *Innere Breite*	Pin diameter *Bolzen-durch-messer*	Pin length *Bolzen-länge*	Plate depth *Laschen-höhe*	Plate thickness *Laschen-dicke*	Ultimate tensile strength *Min. Bruchkraft*	Average tensile strength *Durchschn. Bruchkraft*
	b_1 min	d_2 max	L max	h_2 max	T max	Q min	Q_0
	mm	mm	mm	mm	mm	kN/LB	kN
M20	16.0	6.0	35.0	18.0	2.5	20.0/4545	25.0
M28	18.0	7.0	40.0	20.0	3.0	28.0/6364	35.0
M40	20.0	8.5	45.0	25.0	3.5	40.0/9091	50.0
M56	24.0	10.0	52.0	30.0	4.0	56.0/12727	70.0
M80	28.0	12.0	62.0	35.0	5.0	80.0/18182	100.0
M112	32.0	15.0	73.0	40.0	6.0	112.0/25454	140.0
M160	37.0	18.0	85.0	50.0	7.0	160.0/36364	200.0
M224	43.0	21.0	98.0	60.0	8.0	224.0/50909	280.0
M315	48.0	25.0	112.0	70.0	10.0	315.0/71591	393.7
M450	56.0	30.0	135.0	80.0	12.0	450.0/102272	562.5

Conveyor chains (M series)
Förderketten (M Serie)

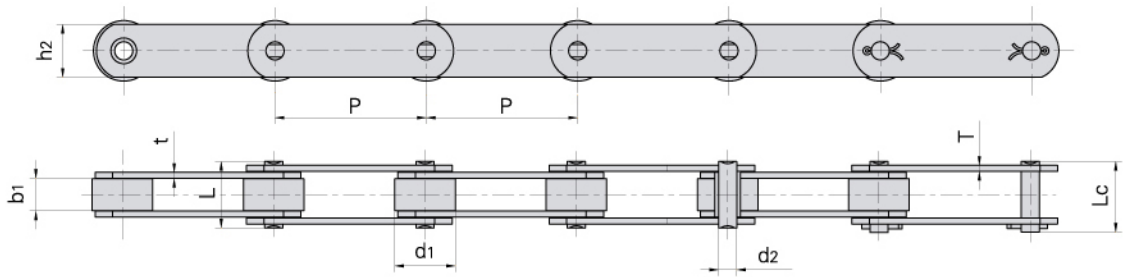

Donghua Chain No. *Donghua Ketten Nr.*	Pitch *Teilung*	Roller diameter *Rollen-durch-messer*	Width between inner plates *Innere Breite*	Pin diameter *Bolzen-durch-messer*	Pin length *Bolzen-länge*		Inner plate depth *Laschen-höhe*	Plate thickness *Laschen-dicke*	Ultimate tensile strength *Min. Bruchkraft*	Average tensile strength *Durchschn. Bruchkraft*	Weight per meter *Gewicht*
	P	d_1 max	b_1 min	d_2 max	L max	Lc max	h_2 max	t / T max	Q min	Q_0	q
	mm	mm	mm	mm	mm	mm	mm	mm	kN/LB	kN	kg/m
M18F1–P–50	50.0	25.00	11.50	5.72	26.0	28.2	18.0	2.5	18.0/4050	20.0	1.81
M22–P–50	50.0	25.00	11.50	8.00	28.0	30.9	20.0	3.0	22.0/4950	24.2	2.64
M22F1–P–50	50.0	25.00	12.00	10.00	29.4	32.6	20.0	3.0	22.0/4950	24.2	2.30
M35F2–S–35	35.0	14.00	14.00	7.00	31.0	34.0	18.0	3.5/2.5	35.0/7874	39.0	1.82
M35F2–P–35	35.0	22.00	14.00	7.00	31.0	34.0	18.0	3.5/2.5	35.0/7874	39.0	2.47
*M35F3–B–35	35.0	14.00	14.00	6.00	30.2	33.0	18.0	3.0	35.0/7874	39.0	1.73
M35F11–P–35	35.0	20.00	16.00	7.00	31.0	34.0	18.0	2.50	35.0/7874	39.0	2.22
M35F4–C–69	69.0	25.00	12.00	7.00	27.5	30.0	19.0	2.5	35.0/7874	39.0	1.60
M35F5–P–50.8	50.8	25.00	16.00	7.00	33.0	36.0	20.0	3.0	35.0/7874	39.0	2.48
M40F17–P–50.8	50.8	31.00	15.20	13.35	38.0	42.8	25.0	5.0/4.0	53.9/12127	59.2	4.45
M40–PF1–100	100.0	36.00	20.00	8.50	40.5	44.5	25.0	3.5	40.0/9000	44.0	3.28
M40F4–P–50	50.0	31.75	15.00	10.00	36.6	39.0	25.0	4.0	40.0/9000	44.0	4.00
M28F4–S–50	50.0	15.00	17.00	7.00	33.0	36.5	20.0	3.0	28.0/6300	35.0	1.88
M35F10–P–50	50.0	20.00	16.00	7.00	33.0	36.0	25.0	3.0	35.0/7874	39.0	2.53
M35F9–P–50	50.0	25.00	16.00	6.00	30.4	32.7	18.0	2.5	33.0/7425	36.0	2.23
M20–PF1–50	50.0	30.00	16.00	6.00	31.0	33.5	18.0	2.5	20.0/4500	22.0	2.60
M40F5–S–65	65.0	24.00	15.00	10.00	36.6	39.0	30.0	4.0	40.0/9000	44.0	4.86
M40F6–P–80	80.0	36.00	20.00	8.50	41.0	44.2	25.0	4.0	40.0/9000	44.0	3.68
M56F14–S–63	63.0	21.00	24.00	10.00	46.0	49.5	30.0	4.0	56.0/12600	61.6	3.81
M28F5–P–63	63.0	30.00	18.00	7.00	42.0	45.5	5.00	5.0	40.0/9000	50.0	4.23
M56F14–S–80	80.0	21.00	24.00	10.00	46.0	49.5	30.0	4.0	56.0/12600	61.6	3.27
M80F8–S–80	80.0	25.00	28.00	12.00	55.0	58.5	35.0	5.0	80.0/18000	88.0	5.11
M80F9–S–80	80.0	25.00	28.00	12.00	54.5	59.0	35.0	5.0	80.0/18000	88.0	5.07
M56F14–P–100	100.0	42.00	24.00	10.00	46.0	49.5	30.0	4.0	56.0/12600	61.6	5.00
M75–P–75	75.0	40.00	22.00	12.00	44.0	47.0	35.0	4.0	75.0/16870	75.0	5.88
M80F3–P–125	125.0	50.00	28.00	11.00	55.0	58.5	35.0	5.0	80.0/18000	88.0	6.72
M80F4–A–100	100.0	25.00	28.00	12.00	55.0	58.5	35.0	5.0	80.0/18000	88.0	4.63
M80F6–P–75	75.0	35.00	14.00	12.00	40.5	45.0	30.0	5.0	80.0/18000	88.0	4.80
*M80F8–B–100	100.0	18.00	28.00	12.00	55.0	58.5	35.0	5.0	80.0/18000	88.0	4.14
*M80F8–B–80	80.0	18.00	28.00	12.00	55.0	58.5	35.0	5.0	80.0/18000	88.0	4.48
M100–P–80	80.0	47.50	31.40	15.90	71.2	76.0	40.0	8.0	100.0/22727	110.0	12.36
M112F2–P–125	125.0	55.00	50.00	16.00	87.1	91.6	40.0	7.2	112.0/25200	123.2	13.35

*Bushing chain: d1 in the table indicate the external diameter of the bushing.
**Buchsenketten: In dieser Tabelle zeigt d1 den Außendurchmesser der Buchsen.*

Conveyor chains (M series)
Förderketten (M Serie)

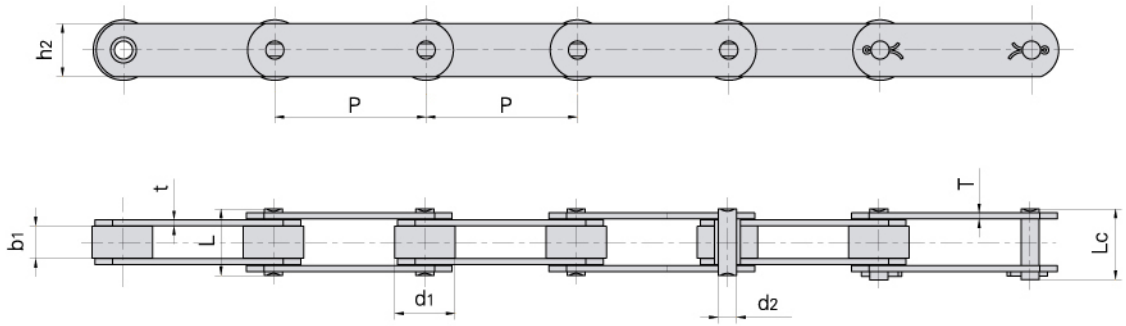

Donghua Chain No. *Donghua Ketten Nr.*	Pitch *Teilung*	Roller diameter *Rollen-durch-messer*	Width between inner plates *Innere Breite*	Pin diameter *Bolzen-durch-messer*	Pin length *Bolzen-länge*		Inner plate depth *Laschen-höhe*	Plate thickness *Laschen-dicke*	Ultimate tensile strength *Min. Bruchkraft*	Average tensile strength *Durchschn. Bruchkraft*	Weight per meter *Gewicht*
	P	d_1 max	b_1 min	d_2 max	L max	Lc max	h_2 max	t / T max	Q min	Q_0	q
	mm	mm	mm	mm	mm	mm	mm	mm	kN/LB	kN	kg/m
*M112F6–B–100	100.00	21.00									6.14
*M112F6–B–125	125.00	21.00	32.00	15.00	64.0	68.3	40.0	6.0	112.0/25200	123.20	5.46
M112F6–P–125	125.00	60.00									10.33
M112F7–P–125	125.00	30.00	32.00	15.00	64.00	68.30	40.0	6.0	112.0/25200	123.20	6.39
*M80F4–B–125	125.00	18.00	28.00	12.00	55.00	58.50	35.0	5.0	80.0/18000	88.00	3.85
*M80F8–B–125	125.00	18.00	28.00	12.00	55.00	58.50	35.0	5.0	80.0/18000	88.00	3.85
M112F8–S–100	100.00	30.00	31.00	15.00	63.50	68.00	40.0	6.0	112.0/25200	123.20	7.14
M160F1–P–100	100.00	36.00	36.00	18.00	76.00	80.00	40.0	7.0	160.0/36364	176.00	9.42
M56F21–P–100	100.00	42.00	24.00	12.00	54.70	59.50	30.0	6.0	56.0/12600	61.60	6.30
M80F12–P–100	100.00	50.00	28.00	12.00	55.00	58.50	35.0	5.0	80.0/18000	88.00	7.80
*M80F4–B–100	100.00	18.00	28.00	12.00	55.00	58.50	35.0	5.0	80.0/18000	88.00	4.13
*M112F15–B–100	100.00	21.00	31.00	15.00	64.50	69.00	40.0	6.0	112.0/25200	123.20	5.90
*M160F15–B–100	100.00	25.00	37.00	18.00	85.30	91.50	50.0	10.0	160.0/36364	176.00	12.51
*M160F14–B–100	100.00	25.00	37.00	18.00	77.30	83.50	50.0	8.0	160.0/36364	176.00	10.44
M224F3–P–160	160.00	80.00	30.00	21.00	81.00	–	60.0	8.0	224.0/50909	246.00	17.34
*M315F6–B–160	160.00	42.00	80.00	25.00	140.00	140.00	80.0	12.0	315.0/70862	346.50	27.30
*M112F14	160.00	21.00	31.00	14.00	64.40	69.00	40.0	6.0	112.0/25200	123.20	5.03
*M315F17–B–160	160.00	36.00	66.70	25.00	93.50	100.50	70.0	8.0	315.0/70862	346.50	15.04
M315F12–S–200	200.00	45.00	48.00	25.00	119.00	126.50	70.0	15.0	600.0/135000	648.00	24.20
M315F10–S–250	250.00	50.00	55.00	26.00	106.90	113.00	70.0	10.0	315.0/70862	393.70	17.60
M315F16–S–250	250.00	60.00	48.00	25.00	109.50	117.00	70.0	12.0	600.0/135000	648.00	21.60

*Bushing chain: d_1 in the table indicate the external diameter of the bushing.
**Buchsenketten: In dieser Tabelle zeigt d_1 den Außendurchmesser der Buchsen.*

Conveyor chain with attachments (M series)
Förderketten mit Befestigungslaschen (M Serie)

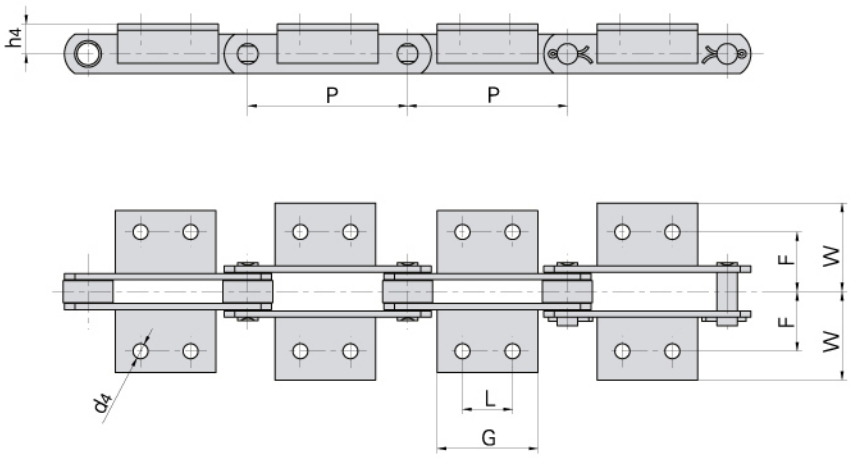

ISO Chain No. *ISO Ketten Nr.*	P	L	G	d4	F	W	h4
	mm	mm	mm	mm	mm	mm	mm
M20	40.0	△	14.0	6.6	27.0	40.0	16.0
	50.0	△	14.0				
	63.0	20.0	35.0				
	80.0	35.0	50.0				
M28	50.0	△	20.0	9.0	32.0	47.0	20.0
	63.0	△	20.0				
	80.0	25.0	45.0				
	100.0	40.0	60.0				
M40	63.0	△	31.0	9.0	35.0	50.0	25.0
	80.0	20.0	45.0				
	100.0	40.0	60.0				
	125.0	65.0	85.0				
M56	63.0	△	22.0	11.0	44.0	61.0	30.0
	80.0	△	30.0				
	100.0	25.0	50.0				
	125.0	50.0	75.0				
	160.0	85.0	110.0				
M80	80.0	△	30.0	11.0	48.0	65.0	35.0
	100.0	25.0	50.0				
	125.0	50.0	75.0				
	160.0	85.0	110.0				
	200.0	125.0	150.0				

△ Attachments with 1 hole
△ *Befestigungslaschen mit einem Loch*

Conveyor chain with attachments (M series)
Förderketten mit Befestigungslaschen (M Serie)

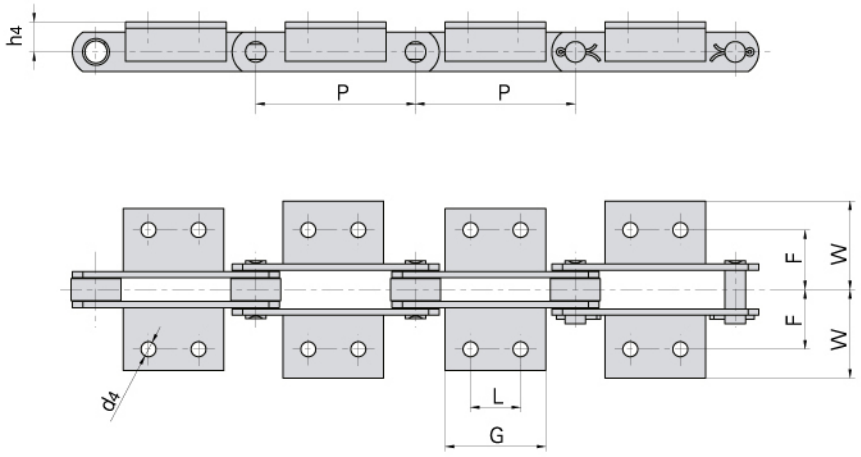

ISO Chain No. *ISO Ketten Nr.*	P	L	G	d4	F	W	h4
	mm	mm	mm	mm	mm	mm	mm
M112	80.0	△	28.0	14.0	55.0	80.0	40.0
	100.0	△	40.0				
	125.0	35.0	65.0				
	160.0	65.0	95.0				
	200.0	100.0	130.0				
M160	100.0	△	30.0	14.0	62.0	85.0	45.0
	125.0	25.0	50.0				
	160.0	50.0	80.0				
	200.0	85.0	115.0				
	250.0	145.0	175.0				
M224	125.0	△	35.0	18.0	70.0	110.0	55.0
	160.0	△	60.0				
	200.0	65.0	100.0				
	250.0	125.0	160.0				
	315.0	190.0	230.0				
M315	160.0	△	35.0	18.0	80.0	115.0	65.0
	200.0	50.0	85.0				
	250.0	100.0	140.0				
	315.0	155.0	190.0				
	400.0	155.0	205.0				

△Attachments with 1 hole
△*Befestigungslaschen mit einem Loch*

Conveyor chain with attachments (M series)
Förderketten mit Befestigungslaschen (M Serie)

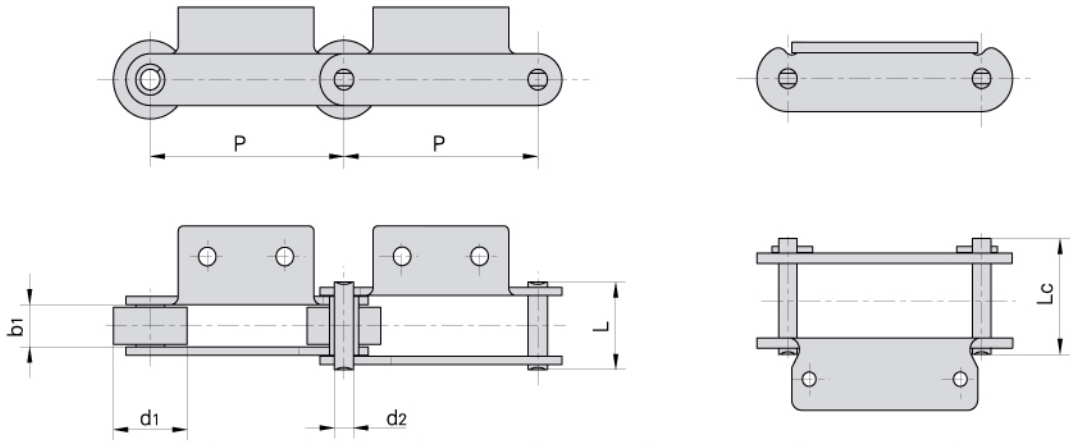

Donghua Chain No. *Donghua Ketten Nr.*	Pitch *Teilung*	Roller diameter *Rollen-durch-messer*	Width between inner plates *Innere Breite*	Pin diameter *Bolzen-durch-messer*	Pin length *Bolzen-länge*		Ultimate tensile strength *Min. Bruchkraft*	Average tensile strength *Durchschn. Bruchkraft*	Weight per meter *Gewicht*
	P	d_1 max	b_1 min	d_2 max	L max	Lc max	Q min	Q_0	q
	mm	mm	mm	mm	mm	mm	kN/LB	kN	kg/m
M18F1A1–P–50	50.0	25.0	11.5	5.72	26.0	28.2	18.0/4050	20.0	2.46
M18F2A1.02–P–50	50.0	25.0	11.5	5.72	28.0	30.2	18.0/4050	20.0	2.18
M18F4A1.02–S–50	50.0	15.0	12.0	6.00	24.0	26.5	18.0/4050	20.0	1.20
M28F3A2–P–63	63.0	30.0	17.0	7.00	37.3	40.3	35.0/7874	39.0	3.48
M28F1A2–P–80	80.0	29.4	18.0	7.00	35.4	38.7	28.0/6300	31.0	2.60
M28F3A2–F–100	100.0	30.0	17.0	7.00	37.3	40.3	35.0/7874	39.0	3.46
M32A1.02–P–50	50.0	31.0	15.0	10.00	33.0	35.5	32.0/7200	35.2	4.09
M32A1F1–P–50	50.0	31.0	15.0	10.00	33.0	35.5	32.0/7200	35.2	3.96
M35F4A1.01–C–69	69.0	25.0	12.0	7.00	27.5	30.0	35.0/7874	39.0	2.26
M40FA1.02–P–50	50.0	31.0	15.0	10.00	36.6	39.0	75.0/16872	82.5	4.52
M40FK2F1–P–50	50.0	31.0	15.0	10.00	36.6	39.0	40.0/9000	44.0	4.94
M40FA2–P–50	50.0	31.0	15.0	10.00	36.6	39.0	40.0/9000	44.0	4.54
M40FA1F1.02–P–50	50.0	31.0	15.0	10.00	36.6	39.0	40.0/9000	44.0	4.31
M40FA2F1.08–P–50	50.0	31.0	15.0	10.00	36.6	39.0	40.0/9000	44.0	4.08
M40F17A2–P–50.8	50.8	31.0	15.2	13.40	38.0	42.8	53.9/12127	59.2	4.90
M40F5A2–S–65	65.0	24.0	15.0	12.00	38.0	41.0	40.0/9000	44.0	4.74
M40F10–F–76.2	76.2	31.5	15.0	14.00	38.0	42.0	40.0/9000	44.0	4.16
M40F1–P–125	125.0	36.0	38.0	14.27	75.6	–	40.0/9091	44.0	10.18
M56F1–P–100	100.0	38.0	20.5	10.00	42.3	46.1	56.0/12727	61.0	4.63
M56F2–P–100	100.0	42.0	22.5	10.00	44.6	48.5	56.0/12727	61.0	5.67
M56F3–P–100	100.0	38.0	20.5	10.00	42.3	46.1	56.0/12727	61.0	4.72
M56F8–P–100	100.0	38.0	17.0	10.00	38.8	42.6	56.0/12727	61.0	3.79
M56F9–F1–100	100.0	38.0	20.5	10.00	46.3	50.1	88.2/19845	97.0	5.80
M56A2–P–125	125.0	42.0	24.0	10.00	46.0	49.5	56.0/12727	61.0	5.24
M75–P100	100.0	38.0	18.9	9.53	40.4	44.7	75.0/17045	83.0	4.85
M75–P100F1	100.0	38.0	18.9	9.53	38.4	42.7	75.0/17045	83.0	4.01

*Bushing chain: d_1 in the table indicate the external diameter of the bushing.
**Buchsenketten: In dieser Tabelle zeigt d_1 den Außendurchmesser der Buchsen.*

Conveyor chain with attachments (M series)
Förderketten mit Befestigungslaschen (M Serie)

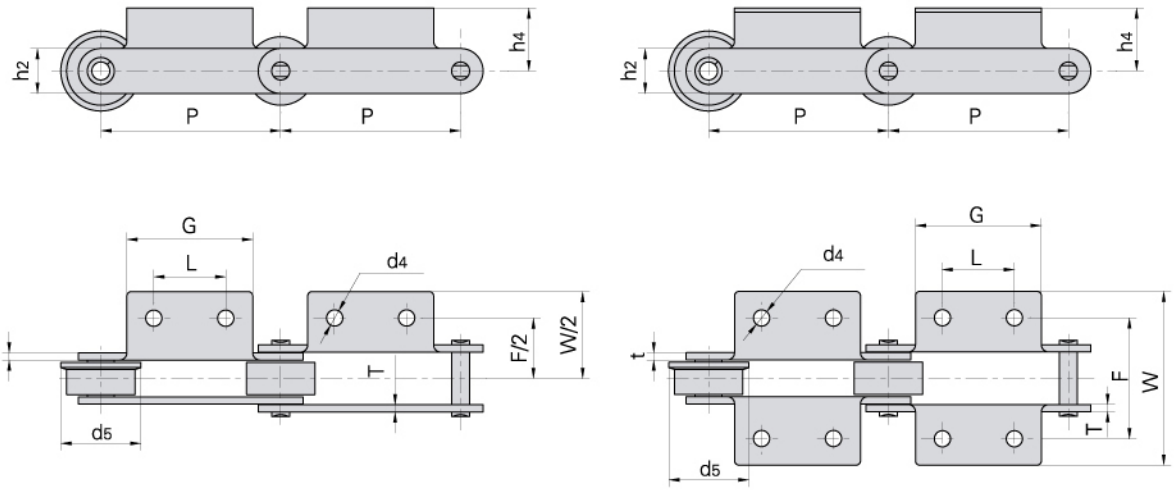

Donghua Chain No. *Donghua Ketten Nr.*	P	L	G	F	W	h4	h2	d4	t/T	d5
	mm	mm	mm	mm	mm	mm	mm	mm	mm	mm
M18F1A1–P–50	50.0	△	46.0	44.0	72.0	24.0	18.0	6.5	2.50	–
M18F2A1.02–P–50	50.0	△	41.0	48.0	68.0	25.0	15.0	6.5	3.00	–
M18F4A1.02–S–50	50.0	△	30.0	50.0	83.0	20.0	15.0	8.0	2.03	–
M28F3A2–P–63	63.0	20.0	50.0	64.0	92.0	20.0	20.0	9.0	4.00	–
M28F1A2–P–80	80.0	25.0	45.8	66.0	91.6	11.8	20.5	8.8	3.25	–
M28F3A2–F–100	100.0	40.0	76.0	64.0	100.0	20.0	20.0	9.0	4.00	40.0
M32A1.02–P–50	50.0	△	60.0	62.0	97.0	35.0	23.0	10.0	3.00	–
M32A1F1–P–50	50.0	△	30.0	62.0	92.0	28.0	23.0	10.0	3.00	–
M35F4A1.01–C–69	69.0	△	60.0	50.0	74.0	25.5	19.0	7.0	2.50	–
M40FA1.02–P–50	50.0	△	60.0	70.0	98.0	17.5	25.0	10.0	4.00	–
M40FK2F1–P–50	50.0	30.0	60.0	67.5	100.0	17.0	25.0	9.0	4.00	–
M40FA2–P–50	50.0	30.0	45.0	93.0	136.0	14.5	25.0	6.5	4.00	–
M40FA1F1.02–P–50	50.0	△	35.0	54.0	104.0	20.5	25.0	10.5	4.00	–
M40FA2F1.08–P–50	50.0	25.0	45.0	90.0	122.0	22.0	25.0	8.5	4.00	–
M40F17A2–P–50.8	50.8	30.0	55.0	66.0	92.0	18.0	25.0	10.2	5.00/4.00	–
M40F5A2–S–65	65.0	25.0	45.0	90.0	122.0	24.5	30.0	8.5	4.00	–
M40F10–F–76.2	76.2	22.2	38.3	76.2	106.5	19.0	26.0	9.4	4.00	40.0
M40F1–P–125	125.0	50.0	90.0	100.0	140.0	36.0	50.0	13.0	6.00	–
M56F1–P–100	100.0	40.0	70.0	67.5	96.6	35.0	25.0	9.0	4.00	–
M56F2–P–100	100.0	29.7	50.0	124.0	148.0	21.5	32.0	7.0	4.00	–
M56F3–P–100	100.0	50.0	70.0	71.0	101.0	35.0	25.0	9.0	4.00	–
M56F8–P–100	100.0	△	70.0	63.8	95.0	25.0	25.0	8.2	4.00	–
M56F9–F1–100	100.0	40.0	70.0	68.0	96.6	25.0	32.0	9.0	5.00	45.0
M56A2–P–125	125.0	50.0	75.0	88.0	128.0	30.0	30.0	11.0	4.00	–
M75–P100	100.0	40.0	70.0	64.0	112.0	24.9	26.0	9.0	4.00	–
M75–P100F1	100.0	40.0	70.0	64.0	112.0	24.4	26.0	9.0	3.50	–

△ Attachments with 1 hole
△ *Befestigungslaschen mit einem Loch*

Conveyor chain with attachments (M series)
Förderketten mit Befestigungslaschen (M Serie)

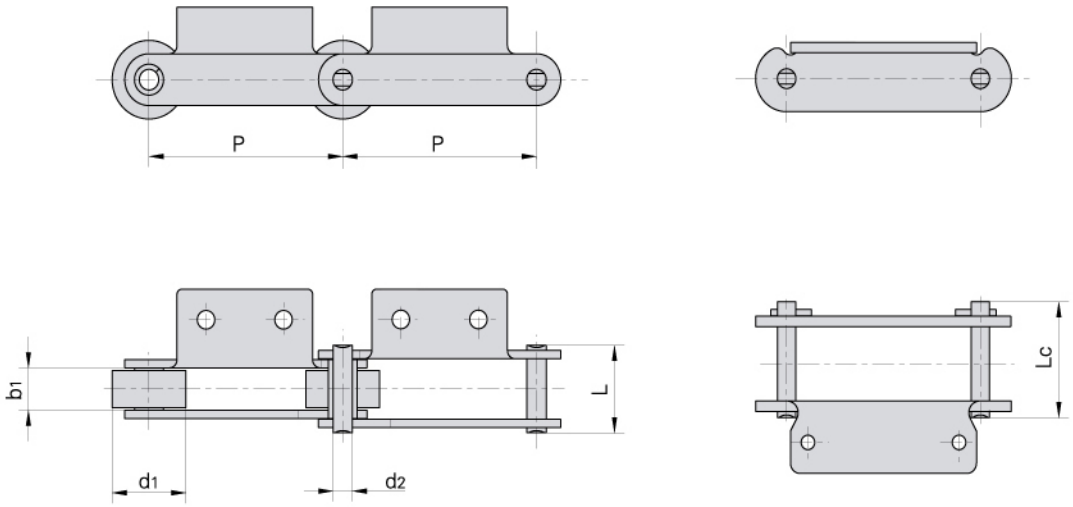

Donghua Chain No. *Donghua Ketten Nr.*	Pitch *Teilung*	Roller diameter *Rollen-durchmesser*	Width between inner plates *Innere Breite*	Pin diameter *Bolzen-durchmesser*	Pin length *Bolzen-länge*		Ultimate tensile strength *Min. Bruchkraft*	Average tensile strength *Durchschn. Bruchkraft*	Weight per meter *Gewicht*
	P	d_1 max	b_1 min	d_2 max	L max	Lc max	Q min	Q_0	q
	mm	mm	mm	mm	mm	mm	kN/LB	kN	kg/m
M75–P100F3	100.0	28.5	23.9	11.10	46.3	50.3	75.0/17045	83.0	4.53
M75F4–P–100	100.0	38.0	18.9	9.53	40.4	44.7	75.0/17045	83.0	4.62
M75–PF1–100	100.0	19.1	18.9	9.53	40.4	44.7	75.0/16872	75.0	3.43
M80K1F1–P–100	100.0	50.0	28.0	12.00	55.0	58.5	80.0/18000	88.0	9.10
*M80K2F1–B–100	100.0	18.0	28.0	12.00	55.0	58.5	80.0/18000	88.0	5.94
*M80F5K1–B–100	100.0	18.0	28.0	12.0	55.0	58.5	80.0/18000	88.0	5.45
M80A2F1–F–160	160.0	50.0	29.0	12.0	65.0	–	80.0/18000	88.0	7.45
M112F5K2–P–100	100.0	36.0	37.0	16.0	69.0	74.0	112.0/25200	123.2	8.28
*M112K2F2–B–100	100.0	21.0	32.0	15.0	64.5	69.0	112.0/25200	123.2	7.53
M112F16K1–P–125	125.0	60.0	32.0	15.0	68.5	73.0	112.0/25200	123.2	13.00
M112K2F1–S–125	125.0	30.0	32.0	16.0	64.5	69.0	112.0/25200	123.2	7.35
M112F9A2–F–180	180.0	50.0	32.0	15.0	64.5	69.0	160.0/35993	176.0	10.30
M112F3–F–200	200.0	60.0	37.0	16.0	69.0	74.0	112.0/25200	123.2	11.00
M160F1K2–P–100	100.0	36.0	36.0	18.0	76.0	80.0	160.0/35993	176.0	10.80
*M160F1K2.03–B–100	100.0	18.0	36.0	18.0	76.0	80.0	160.0/35993	176.0	9.73
M160F12K2–S–100	100.0	36.0	38.0	14.0	76.0	–	100.0/22496	110.0	9.33
*M160F2–B–100	100.0	25.0	37.0	18.0	73.3	83.0	222.0/49940	244.2	11.36
M160F3K1F1–P–101.6	101.6	66.7	26.0	26.9	58.0	78.5	156.0/35093	171.6	17.37
M160A2F7–F–200	200.0	70.0	37.0	18.0	85.0	–	181.8/40905	200.0	15.20
M160K2F2–S–200	200.0	36.0	36.0	18.0	76.0	80.0	160.0/36364	176.0	11.40
M160A2F8–F–200	200.0	70.0	37.0	18.0	85.0	–	181.8/40905	200.0	15.20
M224F6A2–P–160	160.0	85.0	42.0	21.0	87.5	92.5	224.0/51982	246.5	27.56
M224F1K2–P–200	200.0	85.0	42.0	21.0	95.0	–	224.0/50909	246.0	21.20

Conveyor chain with attachments (M series)
Förderketten mit Befestigungslaschen (M Serie)

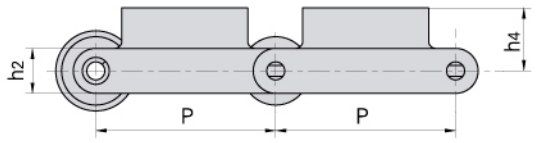

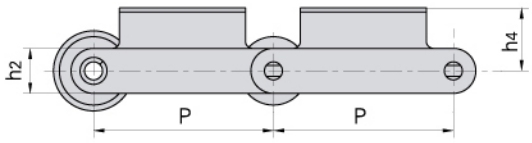

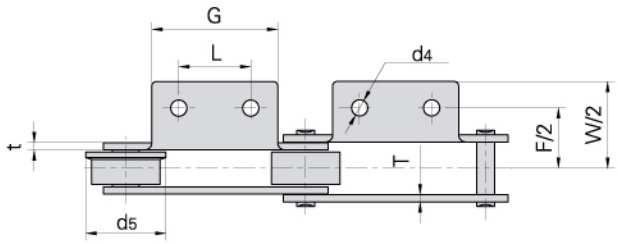

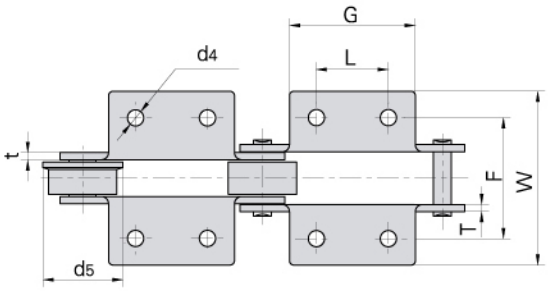

Donghua Chain No. *Donghua Ketten Nr.*	P	L_1	G	F	W	h_4	h_2	d_4	t/T	d_5
	mm	mm	mm	mm	mm	mm	mm	mm	mm	mm
M75–P100F3	100.0	50.0	70.0	75.7	96.7	35.0	26.0	9.7	4.0	–
M75F4–P–100	100.0	40.0	70.0	90.0	112.4	24.9	26.0	8.5	4.0	–
M75–PF1–1										
0F1K2–P–100	100.0	40.0	80.0	124.0	183.0	35.0	40.0	14.0	7.0	–
F1K2.03–B–100	100.0	40.0	80.0	124.0	283.0	35.0	40.0	14.0	7.0	–
0F12K2–S–100	100.0	30.0	70.0	100.0	120.0	35.0	40.0	13.0	5.6	–
60F2–B–100	100.0	△	110.0	125.0	155.0	45.0	50.0	17.0	7.0	–
3K1F1–P–101.6	101.6	△	56.0	175.0	204.0	38.0	51.0	11.0	7.1/5.1	–
0A2F7–F–200	200.0	85.0	115.0	124.0	170.0	45.0	51.0	14.0	7.0	85.0
0K2F2–S–200	200.0	100.0	180.0	103.0	133.0	45.0	51.0	9.0	7.0	–
0A2F8–F–200	200.0	80.0	115.0	124.0	170.0	45.0	51.0	12.0	7.0	85.0
4F6A2–P–160	160.0	80.0	125.0	136.0	182.0	62.0	72.0	17.0	8.0	–
4F1K2–P–200	200.0	80.0	120.0	128.0	168.0	40.0	50.0	14.0	9.0	–

ments with 1 hole
ungslaschen mit einem Loch

M160
*M160
M160
*M1
M160F
M160
M160
M160
M224
M224

△ Attachm
△ *Befest*

Conveyor chains (MT series)
Förderketten (MT Serie)

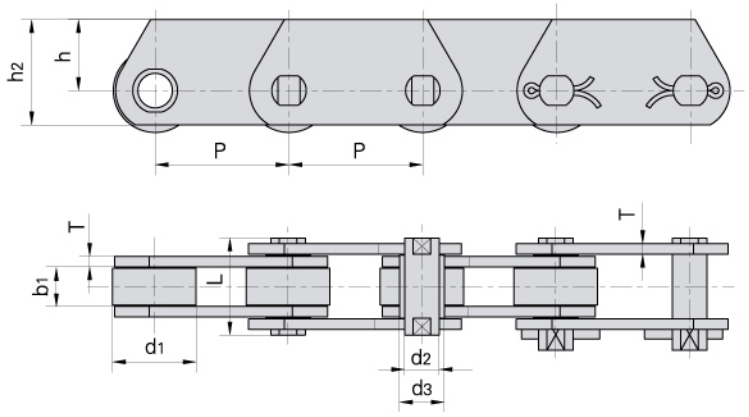

DIN Chain No. *DIN Ketten Nr.*	Pitch *Teilung* P mm					Roller diameter *Rollen-durchmesser* d_1 max mm	Pin diameter *Bolzen-durchmesser* d_2 max mm	Bush diameter *Buchsen-durchmesser* d_3 max mm	Plate thickness *Laschen-dicke* T max mm
MT20	40.0	50.0	63.0	80.0	100.0	25.0	6.0	9.0	2.5
MT28	50.0	63.0	80.0	100.0	125.0	30.0	7.0	10.0	3.0
MT40	63.0	80.0	100.0	125.0	160.0	36.0	8.5	12.5	3.5
MT56	63.0	80.0	100.0	125.0	160.0	42.0	10.0	15.0	4.0
MT80	80.0	100.0	125.0	160.0	200.0	50.0	12.0	18.0	5.0
MT112	80.0	100.0	125.0	160.0	200.0	60.0	15.0	21.0	6.0
MT160	100.0	125.0	160.0	200.0	250.0	70.0	18.0	25.0	7.0
MT224	125.0	160.0	200.0	250.0	315.0	85.0	21.0	30.0	8.0
MT315	160.0	200.0	250.0	315.0	400.0	100.0	25.0	36.0	10.0
MT450	200.0	250.0	315.0	400.0	500.0	120.0	30.0	42.0	12.0

DIN Chain No. *DIN Ketten Nr.*	Width between inner plates *Innere Breite* b_1 min mm	Pin length *Bolzen-länge* L max mm	Plate depth *Laschen-höhe* h_2 max mm	h max mm	Ultimate tensile strength *Min. Bruchkraft* Q min kN/LB	*Q min kN/LB
MT20	16.0	35.0	25.0	16.0	20.0/4545	32.0/7270
MT28	18.0	40.0	30.0	20.0	28.0/6364	42.0/9545
MT40	20.0	45.0	35.0	22.5	40.0/9091	60.0/13635
MT56	24.0	52.0	45.0	30.0	56.0/12727	85.0/19318
MT80	28.0	62.0	50.0	32.5	80.0/18182	125.0/28408
MT112	32.0	73.0	60.0	40.0	112.0/25454	175.0/39768
MT160	37.0	85.0	70.0	45.0	160.0/36364	260.0/59090
MT224	43.0	98.0	90.0	60.0	224.0/50909	340.0/77272
MT315	48.0	112.0	100.0	65.0	315.0/71591	520.0/118180
MT450	56.0	135.0	120.0	80.0	450.0/102272	700.0/159089

*Q: Higher breaking load with hardened plates
*Q: *höhere Bruchkraft durch gehärtete Laschen*

Hollow pin conveyor chains (MC series)
Förderketten mit Hohlbolzen (MC Serie)

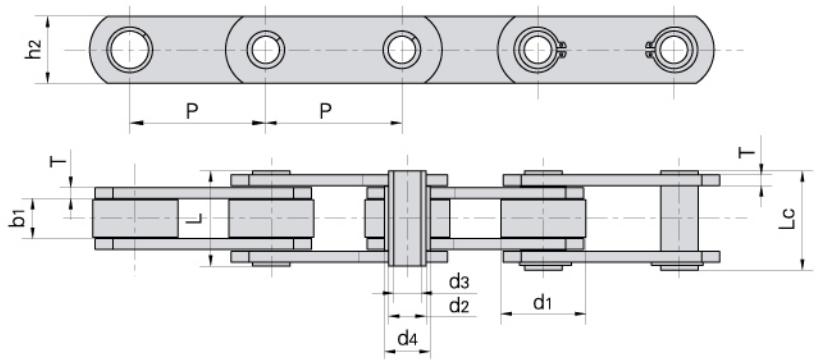

without rollers
ohne Rollen

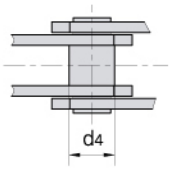

with S small rollers type
mit S-Schonrollen

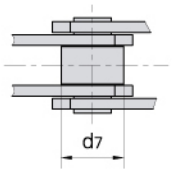

with P large rollers type
mit P-Laufrollen

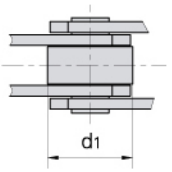

with F flanged rollers type
mit F-Bundlaufrollen

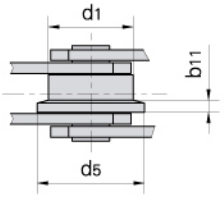

DIN Chain No. / *DIN Ketten Nr.*	Pitch / *Teilung* P						Roller dimesion / *Rollen-abmessungen*				Bush diameter / *Buchsen-durchmesser*	Plate depth / *Laschen-höhe*
							d_1 max	d_7 max	d_5 max	b_{11}	d_4 max	h_2 max
	mm						mm	mm	mm	mm	mm	mm
MC28	63.0	80.0	100.0	125.0	160.0	–	36.0	25.0	45.0	4.5	17.5	25.0
MC56	80.0	100.0	125.0	160.0	200.0	250.0	50.0	30.0	60.0	5.0	21.0	35.0
MC112	100.0	125.0	160.0	200.0	250.0	315.0	70.0	42.0	85.0	7.0	29.0	50.0
MC224	160.0	200.0	250.0	315.0	400.0	500.0	100.0	60.0	120.0	10.0	41.0	70.0

DIN Chain No. / *DIN Ketten Nr.*	Width between inner plates / *Innere Breite*	Pin diameter / *Bolzen-durchmesser*		Pin length / *Bolzen-länge*		Plate thickness / *Laschen-dicke*	Breaking load / *Bruchkraft*	
	b_1 min	d_2 max	d_3 min	L max	Lc max	T max	Q min	*Q min
	mm	mm	mm	mm	mm	mm	kN/LB	kN/LB
MC28	20.0	13.0	8.2	36.0	38.5	3.5	28.0/6364	40.0/9091
MC56	24.0	15.5	10.2	45.0	47.5	4.0	56.0/12727	90.0/20454
MC112	32.0	22.0	14.3	62.5	64.3	6.0	112.0/25454	180.0/40908
MC224	43.0	31.0	20.3	83.0	85.5	8.0	224.0/50909	350.0/79544

*Q: Higher breaking load with hardened plates
**Q: höhere Bruchkraft durch gehärtete Laschen*

Conveyor chains (FV series)
Förderketten (FV Serie)

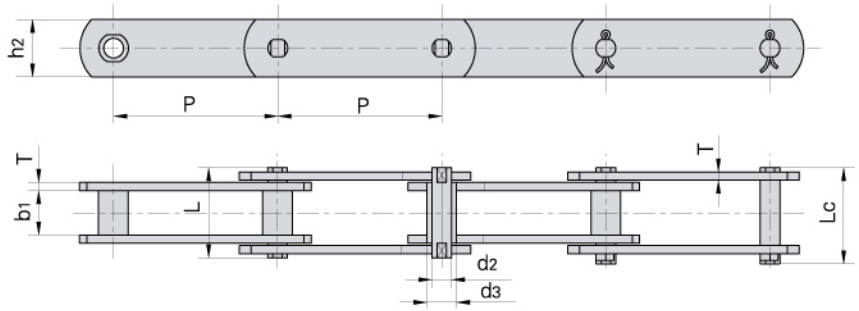

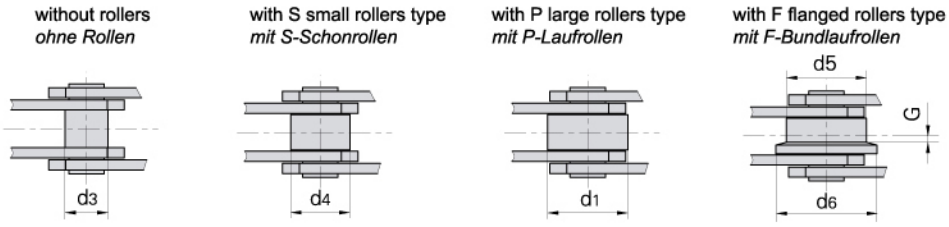

DIN Chain No. *DIN Ketten Nr.*	Pitch *Teilung* P mm							Roller dimesion *Rollen-abmessungen* d1 max mm	d4 max mm	d5 max mm	d6 max mm	G mm	Bush diameter *Buchsen-durch-messer* d3 max mm
FV40	50.0	63.0	80.0	100.0	125.0	–	–	32.0	20.0	40.0	50.0	4.0	15.0
FV63	63.0	80.0	100.0	125.0	160.0	–	–	40.0	26.0	50.0	63.0	5.0	18.0
FV90	63.0	80.0	100.0	125.0	160.0	200.0	250.0	48.0	30.0	63.0	78.0	6.5	20.0
FV112	100.0	125.0	160.0	200.0	250.0	–	–	55.0	32.0	72.0	90.0	7.5	22.0
FV140	100.0	125.0	160.0	200.0	250.0	–	–	60.0	36.0	80.0	100.0	9.0	26.0
FV180	125.0	160.0	200.0	250.0	315.0	–	–	70.0	42.0	100.0	125.0	13.0	30.0
FV250	160.0	200.0	250.0	315.0	400.0	–	–	80.0	50.0	125.0	155.0	15.0	36.0
FV315	160.0	200.0	250.0	315.0	400.0	–	–	90.0	60.0	140.0	175.0	18.0	42.0

DIN Chain No. *DIN Ketten Nr.*	Width between inner plates *Innere Breite* b1 min mm	Pin diameter *Bolzen-durchmesser* d2 max mm	Pin length *Bolzen-länge* L min mm	Lc max mm	Plate depth *Laschen-höhe* h2 max mm	Plate thickness *Laschen-dicke* T max mm	Ultimate tensile strength *Min. Bruchkraft* Q min kN/LB	*Q min kN/LB
FV40	18.0	10.0	36.0	39.0	25.0	3.0	40.0/9091	47.0/10681
FV63	22.0	12.0	45.0	48.5	30.0	4.0	63.0/14317	75.0/17045
FV90	25.0	14.0	53.0	56.5	35.0	5.0	90.0/20453	115.0/26136
FV112	30.0	16.0	62.0	66.0	40.0	6.0	112.0/25452	170.0/38636
FV140	35.0	18.0	67.0	71.5	45.0	6.0	140.0/31815	180.0/40908
FV180	45.0	20.0	86.0	92.0	50.0	8.0	180.0/40908	250.0/56817
FV250	55.0	26.0	97.0	103.5	60.0	8.0	250.0/56817	300.0/68181
FV315	65.0	30.0	113.0	126.5	70.0	10.0	315.0/71591	480.0/109089

*Q: Higher breaking load with hardened plates
*Q: *höhere Bruchkraft durch gehärtete Laschen*

Conveyor chain with attachments (FV series)
Förderketten mit Befestigungslaschen (FV Serie)

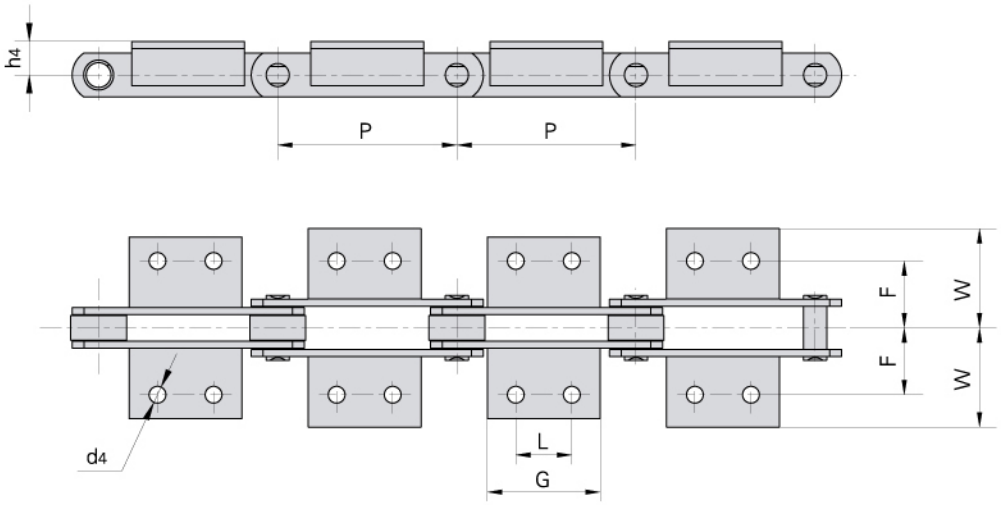

DIN Chain No. *DIN Ketten Nr.*	P	L	G	d4	F	W	h4
	mm	mm	mm	mm	mm	mm	mm
FV40	50.0	△	45.0	6.5	25.0	40.5	20.0
	63.0	△	31.0				
	80.0	25.0	45.0				
	100.0	30.0	50.0				
	125.0	30.0	60.0				
FV63	63.0	△	40.0	8.4	34.0	50.0	30.0
	80.0	25.0	45.0				
	100.0	30.0	50.0				
	125.0	40.0	60.0				
	160.0	50.0	70.0				
FV90	63.0	△	30.0	8.4	40.0	64.0	35.0
	80.0	25.0	45.0				
	100.0	30.0	50.0				
	125.0	40.0	60.0				
	160.0	50.0	70.0				
	200.0	60.0	80.0				
	250.0	65.0	85.0				
FV112	100.0	30.0	50.0	11.0	50.0	70.0	40.0
	125.0	40.0	65.0				
	160.0	50.0	75.0				
	200.0	65.0	90.0				
	250.0	80.0	105.0				

△ Attachments with 1 hole
△ *Befestigungslaschen mit einem Loch*

Conveyor chain with attachments (FV series)
Förderketten mit Befestigungslaschen (FV Serie)

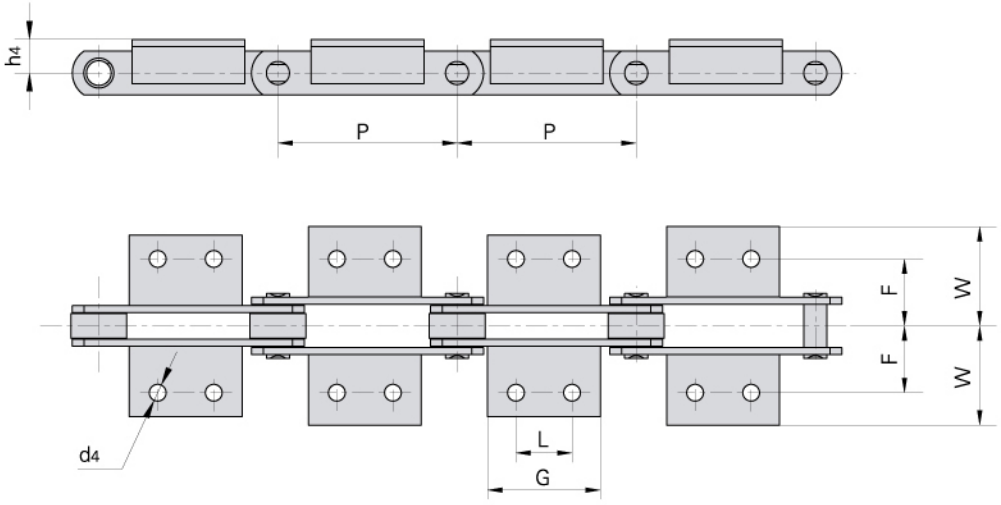

DIN Chain No. *DIN Ketten Nr.*	P	L	G	d4	F	W	h4
	mm	mm	mm	mm	mm	mm	mm
FV140	100.0	30.0	55.0	11.0	50.0	81.0	45.0
	125.0	40.0	65.0				
	160.0	50.0	75.0				
	200.0	65.0	90.0				
	250.0	80.0	105.0				
FV180	125.0	35.0	63.0	13.0	64.0	91.0	45.0
	160.0	50.0	80.0				
	200.0	65.0	95.0				
	250.0	80.0	110.0				
	315.0	100.0	130.0				
FV250	160.0	50.0	80.0	14.0	69.0	106.0	55.0
	200.0	65.0	95.0				
	250.0	80.0	110.0				
	315.0	100.0	130.0				
	400.0	100.0	130.0				
FV315	160.0	△	50.0	14.0	85.0	130.0	60.0
	200.0	65.0	95.0				
	250.0	80.0	110.0				
	315.0	100.0	130.0				
	400.0	100.0	130.0				

△ Attachments with 1 hole
△ *Befestigungslaschen mit einem Loch*

Conveyor chain with attachments (FV series)
Förderketten mit Befestigungslaschen (FV Serie)

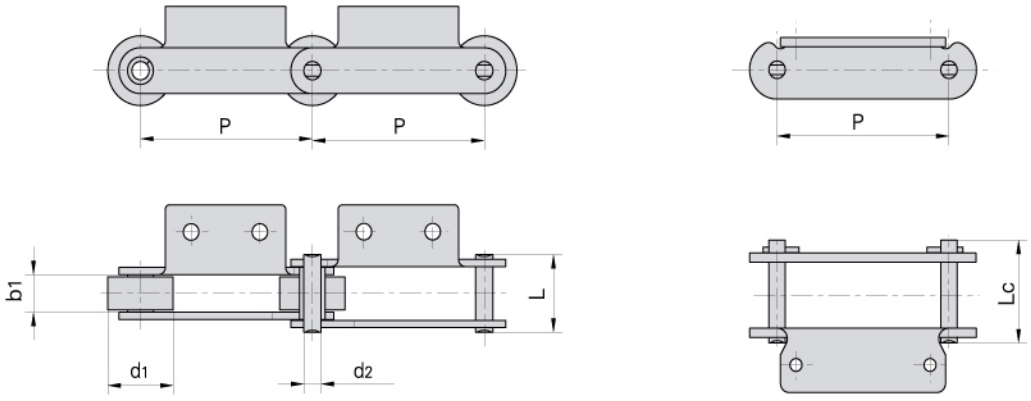

Donghua Chain No. *Donghua Ketten Nr.*	Pitch *Teilung*	Roller diameter *Rollen-durchmesser*	Width between inner plates *Innere Breite*	Pin diameter *Bolzen-durchmesser*	Pin length *Bolzen-länge*		Ultimate tensile strength *Min. Bruchkraft*	Average tensile strength *Durchschn. Bruchkraft*	Weight per meter *Gewicht*
	P	d_1 max	b_1 min	d_2 max	L max	Lc max	Q min	Q_0	q
	mm	mm	mm	mm	mm	mm	kN/LB	kN	kg/m
FV90A2F1–P–85	85.00	50.00	25.00	14.00	52.0	56.5	90.0/20250	100.0	10.15
FV90A2F1–P–100	100.00	50.00	25.00	14.00	52.0	56.5	90.0/20250	100.0	8.74
FV112F1A1–P–100	100.00	55.00	30.00	16.00	71.0	76.5	180.0/40492	200.0	14.30
FV112F1A1–P–80	80.00	55.00	30.00	16.00	71.0	76.5	180.0/40492	200.0	16.60

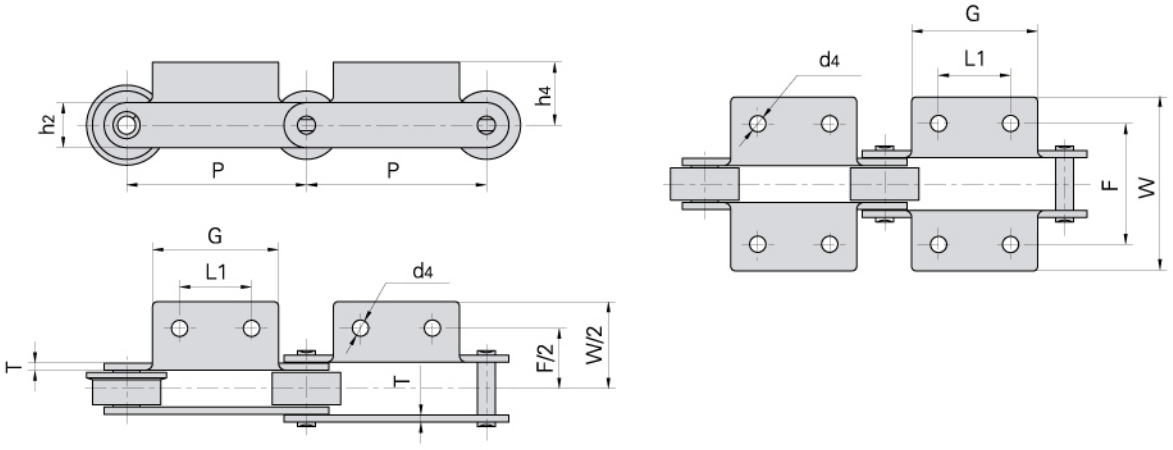

Donghua Chain No. *Donghua Ketten Nr.*	P	L_1	G	F	W	h_4	h_2	d_4	T
	mm	mm	mm	mm	mm	mm	mm	mm	mm
FV90A2F1–P–85	85.00	40.00	60.00	80.0	109.2	40.0	35.0	9.5	5.00
FV90A2F1–P–100	100.00	40.00	60.00	80.0	109.2	40.0	35.0	9.5	5.00
FV112F1A1–P–100	100.00	△	50.00	120.0	164.0	50.0	40.0	15.0	8.00
FV112F1A1–P–80	80.00	△	50.00	120.0	164.0	50.0	40.0	15.0	8.00

△ Attachments with 1 hole
△ *Befestigungslaschen mit einem Loch*

Conveyor chains (FVT series)
Förderketten (FVT Serie)

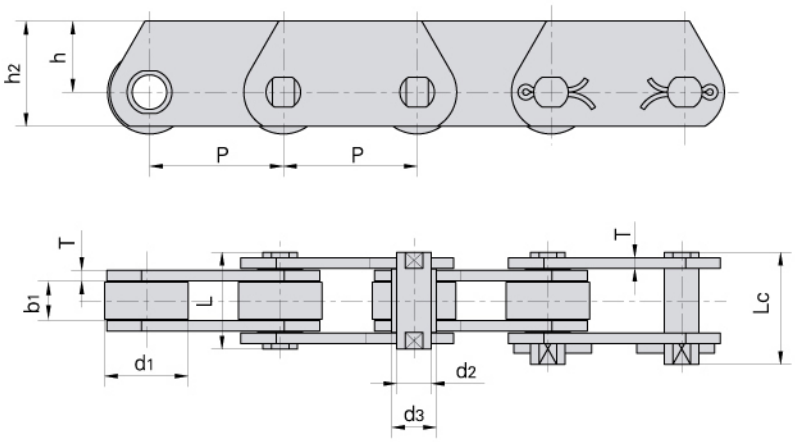

DIN Chain No. / *DIN Ketten Nr.*	Pitch / *Teilung* P mm							Roller diameter / *Rollen-durchmesser* d_1 max mm	Pin diameter / *Bolzen-durchmesser* d_2 max mm	Bush diameter / *Buchsen-durchmesser* d_3 max mm	Plate thickness / *Laschen-dicke* T max mm
FVT40	50.0	63.0	80.0	100.0	125.0	–	–	32.0	10.0	15.0	3.0
FVT63	63.0	80.0	100.0	125.0	160.0	–	–	40.0	12.0	18.0	4.0
FVT90	63.0	80.0	100.0	125.0	160.0	200.0	250.0	48.0	14.0	20.0	5.0
FVT112	100.0	125.0	160.0	200.0	250.0	–	–	55.0	16.0	22.0	6.0
FVT140	100.0	125.0	160.0	200.0	250.0	–	–	60.0	18.0	25.0	6.0
FVT180	125.0	160.0	200.0	250.0	315.0	–	–	70.0	20.0	30.0	8.0
FVT250	160.0	200.0	250.0	315.0	–	–	–	80.0	26.0	36.0	8.0
FVT315	160.0	200.0	250.0	315.0	400.0	–	–	90.0	30.0	42.0	10.0

DIN Chain No. / *DIN Ketten Nr.*	Width between inner plates / *Innere Breite* b_1 min mm	Pin length / *Bolzen-länge* L max mm	Lc max mm	Plate depth / *Laschen-höhe* h_2 max mm	h max mm	Ultimate tensile strength / *Min. Bruchkraft* Q min kN/LB	*Q min kN/LB
FVT40	18.0	36.0	39.0	35.0	22.5	40.0/9091	47.0/10681
FVT63	22.0	45.0	48.5	40.0	25.0	63.0/14317	75.0/17045
FVT90	25.0	53.0	56.5	45.0	27.5	90.0/20453	115.0/26136
FVT112	30.0	62.0	66.0	50.0	30.0	112.0/25452	170.0/38636
FVT140	35.0	67.0	71.5	60.0	37.5	140.0/31815	180.0/40908
FVT180	45.0	86.0	92.0	70.0	45.0	180.0/40908	250.0/56817
FVT250	55.0	97.0	103.5	80.0	50.0	250.0/56817	300.0/68181
FVT315	65.0	113.0	126.5	90.0	55.0	315.0/71591	480.0/109089

*Q: Higher breaking load with hardened plates
*Q: *höhere Bruchkraft durch gehärtete Laschen*

Hollow pin conveyor chains (FVC series)
Förderketten mit Hohlbolzen (FVC Serie)

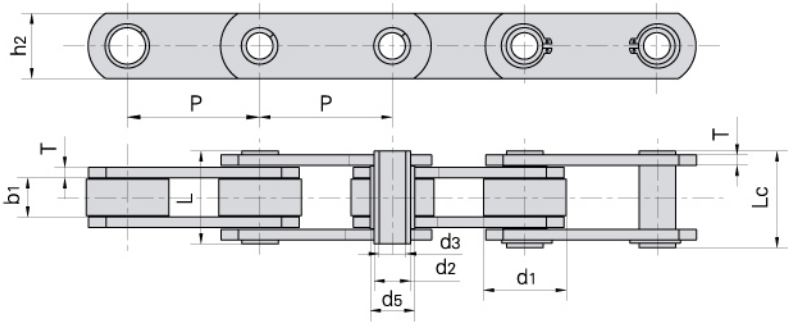

without rollers
ohne Rollen

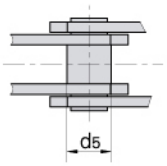

with S small rollers type
mit S-Schonrollen

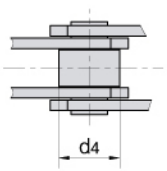

with P large rollers type
mit P-Laufrollen

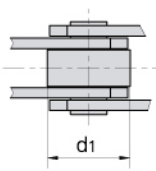

with F flanged rollers type
mit F-Bundlaufrollen

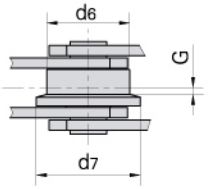

DIN Chain No. *DIN Ketten Nr.*	Pitch *Teilung* P							Roller dimension *Rollenabmessungen* d_1 max	d_4 max	d_6 max	d_7 max	G
	mm	mm	mm	mm	mm	mm	mm	mm	mm	mm	mm	mm
FVC63	63.0	80.0	100.0	125.0	160.0	–	–	40.0	26.0	50.0	63.0	5.0
FVC90	63.0	80.0	100.0	125.0	160.0	200.0	250.0	48.0	30.0	63.0	78.0	6.5
FVC112	100.0	125.0	160.0	200.0	250.0	–	–	55.0	32.0	72.0	90.0	7.5
FVC140	100.0	125.0	160.0	200.0	250.0	–	–	60.0	36.0	80.0	100.0	9.0
FVC180	125.0	160.0	200.0	250.0	315.0	–	–	70.0	42.0	100.0	125.0	13.0
FVC250	160.0	200.0	250.0	315.0	400.0	–	–	80.0	50.0	125.0	155.0	15.0
FVC315	160.0	200.0	250.0	315.0	400.0	–	–	90.0	60.0	140.0	175.0	18.0

DIN Chain No. *DIN Ketten Nr.*	Width between inner plates *Innere Breite*	Pin diameter *Bolzen-durchmesser*		Bush diameter *Buchsen-durchmesser*	Pin length *Bolzen-länge*		Plate thickness *Laschen-dicke*	Plate depth *Laschen-höhe*	Ultimate tensile strength *Min. Bruchkraft*
	b_1 min	d_2 max	d_3 min	d_5 max	L max	Lc max	T max	h_2 max	Q min
	mm	mm	mm	mm	mm	mm	mm	mm	kN/LB
FVC63	22.0	12.0	8.0	18.0	45.0	50.5	4.0	30.0	46.0/10454
FVC90	25.0	14.0	10.0	20.0	53.0	56.5	5.0	35.0	73.0/16590
FVC112	30.0	16.0	11.0	22.0	62.0	63.0	6.0	40.0	90.0/20454
FVC140	35.0	18.0	12.0	26.0	67.0	68.5	6.0	45.0	110.0/25000
FVC180	45.0	20.0	14.0	30.0	86.0	88.0	8.0	50.0	145.0/32954
FVC250	55.0	26.0	18.0	36.0	97.0	103.5	8.0	60.0	215.0/48863
FVC315	65.0	30.0	20.0	42.0	117.0	121.5	10.0	70.0	295.0/67044

Non-standard hollow pin conveyor chains
Nicht-Standard Förderketten mit Hohlbolzen

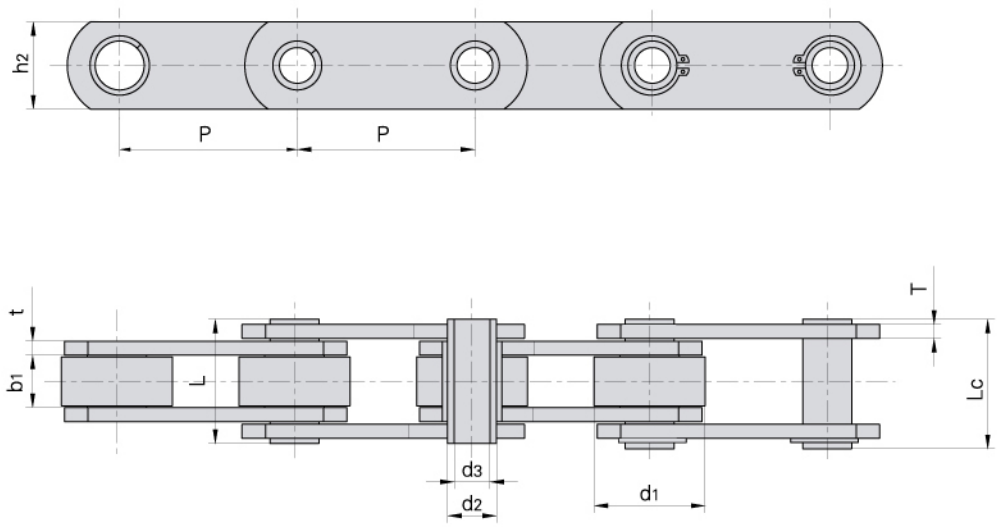

Donghua Chain No. *Donghua Ketten Nr.*	Pitch *Teilung*	Roller diameter *Rollen-durch-messer*	Width between inner plates *Innere Breite*	Pin diameter *Bolzen-durchmesser*		Pin length *Bolzen-länge*		Inner plate depth *Laschen-höhe*	Plate thickness *Laschen-dicke*	Ultimate tensile strength *Min. Bruchkraft*	Average tensile strength *Durchschn. Bruchkraft*	Weight per meter *Gewicht*
	P	d_1 max	b_1 min	d_2 max	d_3 min	L max	L_c max	h_2 max	t/T max	Q min	Q_0	q
	mm	mm	mm	mm	mm	mm	mm	mm	mm	kN/LB	kN	kg/m
MC56F1–S–80	80.00	30.00	24.00	16.00	10.20	45.5	47.0	35.0	4.0	56.0/12600	62.0	4.64
MC56F2–P–100	100.00	50.00	23.00	16.00	10.20	45.5	47.0	35.0	4.0	56.0/12600	62.0	6.27
MC112F1–P–100	100.00	70.00	32.00	22.00	16.30	67.0	68.5	50.0	6.0	112.0/25195	123.2	14.91
MC150F2–P–110	110.00	66.70	25.40	26.90	20.20	58.0	60.5	51.0	7.1/5.1	106.7/24003	118.0	13.50
FVC63F1–B–40	40.00	18.00	22.00	12.00	8.20	47.5	49.0	35.0	5.0	46.0/10348	51.0	5.34
FVC63F2–B–50	50.00	17.00	22.00	12.00	8.20	41.0	42.0	25.0	3.0	30.0/6750	33.0	2.24
FVC63F3–P–63	63.00	40.00	22.00	11.70	8.10	44.0	46.0	30.0	4.0	46.0/10348	51.0	5.83
FVC90F1–P–63	63.00	42.00	25.00	14.00	10.20	52.0	53.5	35.0	5.0	73.0/16422	80.0	5.33
FVC140F1–B–80	80.00	26.00	35.00	18.00	12.50	65.0	67.0	46.0	6.0	110.0/24745	120.0	7.80

Conveyor chains (Z series)
Förderketten (Z Serie)

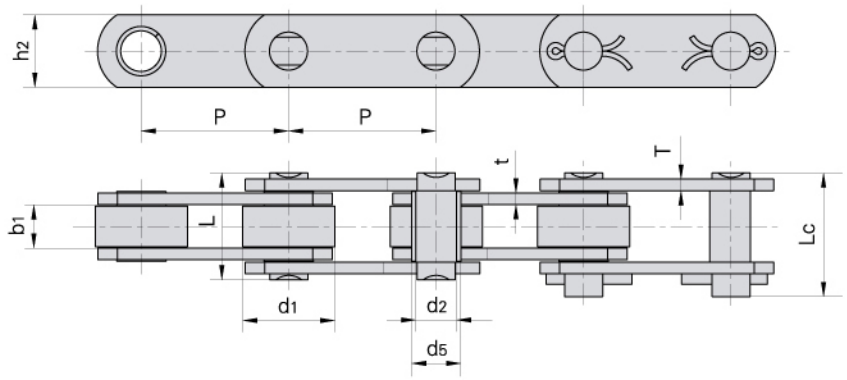

without rollers.
ohne Rollen

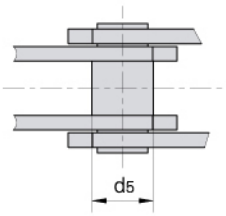

with P large rollers type
mit P-Laufrollen

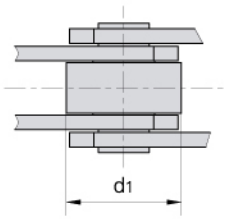

with F flanged rollers type
mit F-Bundlaufrollen

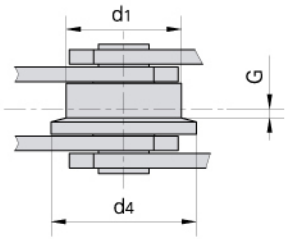

Donghua Chain No. *Donghua Ketten Nr.*	Pitch *Teilung* P							Roller dimension *Rollen-abmessungen*			Bush diameter *Buchsen-durchmesser*
								d_1 max	d_4 max	G	d_5 max
	mm	mm	mm	mm	mm	mm	mm	mm	mm	mm	mm
Z40	50.8	63.5	76.2	88.9	101.6	127.0	152.4	31.75	40.0	2.5	17.0
Z100	76.2	88.9	101.6	127.0	152.4	177.8	203.2	47.50	60.0	3.5	23.0
Z160	101.6	127.0	152.4	177.8	203.2	228.6	254.0	66.70	82.0	3.5	33.0
Z300	152.4	177.8	203.2	254.0	304.8	–	–	88.90	114.0	8.5	38.0

Donghua Chain No. *Donghua Ketten Nr.*	Width between inner plates *Innere Breite*	Pin diameter *Bolzen-durch-messer*	Plate depth *Laschen-höhe*	Pin length *Bolzen-länge*		Plate thickness *Laschen-dicke*	Breaking load *Bruchkraft*	
	b_1 min	d_2 max	h_2 max	L max	Lc max	t/T max	Q min	*Q min
	mm	mm	mm	mm	mm	mm	kN/LB	kN/LB
Z40	15.0	14.0	25.0	37.0	40.5	4.0	40.0/9091	50.0/11362
Z100	19.0	19.0	40.0	45.0	50.5	5.0/4.0	100.0/22725	130.0/29540
Z160	26.0	26.9	50.0	58.0	63.5	7.0/5.0	156.0/35451	200.0/45454
Z300	38.0	32.0	60.0	84.0	94.0	10.0/8.0	300.0/68175	380.0/86362

*Q Higher breaking load with hardened plates
*Q *höhere Bruchkraft durch gehärtete Laschen*

Conveyor chains with attachments (Z series)
Förderketten mit Befestigungslaschen (Z Serie)

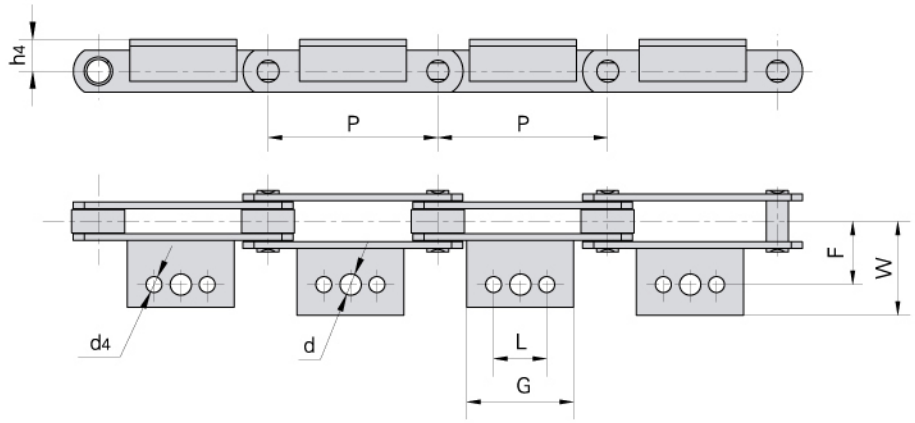

Donghua Chain No. *Donghua Ketten Nr.*		P	L	G	d	d4	F	W	h4
		mm	mm	mm	mm	mm	mm	mm	mm
Z40	△	50.8	–	45.0	10.7	9.3	38.1	64.5	19.0
	△ ☆	63.5	22.2	43.0				56.0	
	△ ☆	76.2						68.0	
	▲	88.9	31.8	50.0				56.0	
	▲	101.6		64.0				55.0	
	▲	127.0	57.2	84.0				56.0	
	▲	152.4							
Z100	△	76.2	–	30.0	14.0	10.5	44.5	65.0	32.0
	△	88.9							
	▲	101.6	31.8	64.0					
	△ ☆	127.0	57.2	84.0					
	▲	152.4		114.5					
	△ ☆	177.8	80.0	110.0					
	△ ☆	203.2							
Z160	△	101.6	–	35.0	15.5	12.3	54.0	77.0	38.0
	△ ☆	127.0	31.7	56.0					
	△ ☆	152.4	57.2	84.0					
	△ ☆	177.8							
	△ ☆	203.2	100.0	130.0					
	△ ☆	228.6		150.0					
	△ ☆	254.0	135.0	170.0					
Z300	△	152.4	38.1	70.0	17.0	14.0	73.0	100.0	51.0
	△	177.8							
	△ ☆	203.2	76.2	100.0					
	△ ☆	254.0	90.0	152.4					
	△ ☆	304.8	190.0	225.0					

△attachments with 1 hole
△*Befestigungslaschen mit einem Loch*

☆attachments with 2 holes
☆*Befestigungslaschen mit zwei Löchern*

▲attachments with 3 holes
▲*Befestigungslaschen mit drei Löchern*

Conveyor chains (ZE series)
Förderketten (ZE Serie)

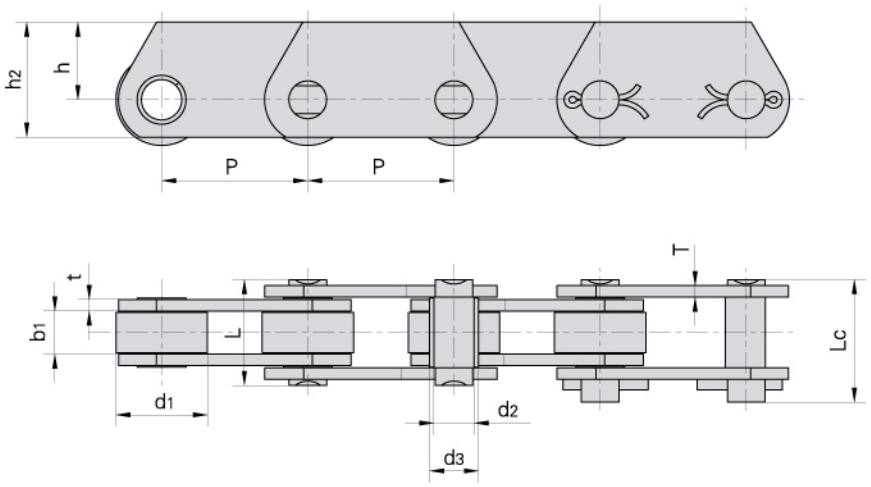

Donghua Chain No. *Donghua Ketten Nr.*	Pitch *Teilung* P mm							Roller diameter *Rollen-durchmesser* d1 max mm	Pin diameter *Bolzen-durchmesser* d2 max mm	Bush diameter *Buchsen-durchmesser* d3 max mm
ZE40	50.8	63.5	76.2	88.9	101.6	127.0	152.4	31.75	14.0	17.0
ZE100	76.2	88.9	101.6	127.0	152.4	177.8	203.2	47.50	19.0	23.0
ZE160	101.6	127.0	152.4	177.8	203.2	228.6	254.0	66.70	26.9	33.0
ZE300	152.4	177.8	203.2	254.0	304.8	–	–	88.90	32.0	38.0

Donghua Chain No. *Donghua Ketten Nr.*	Width between inner plates *Innere Breite* b1 min mm	Pin length *Bolzen-länge* L max mm	Lc max mm	Plate depth *Laschen-höhe* h2 max mm	h max mm	Plate thickness *Laschen-dicke* t/T max mm	Breaking load *Bruchkraft* Q min kN/LB	*Q min kN/LB
ZE40	15.0	37.0	40.5	40.0	27.0	4.0	40.0/9091	60.0/13636
ZE100	19.0	45.0	50.5	50.0	30.0	5.0/4.0	100.0/22725	160.0/36360
ZE160	26.0	58.0	63.5	70.0	45.0	7.0/5.0	160.0/36360	200.0/45454
ZE300	38.0	84.0	94.0	90.0	60.0	10.0/8.0	300.0/68175	380.0/86362

*Q Higher breaking load with hardened plates
*Q höhere Bruchkraft durch gehärtete Laschen.

Hollow pin conveyor chains (ZC series)
Förderketten mit Hohlbolzen (ZC Serie)

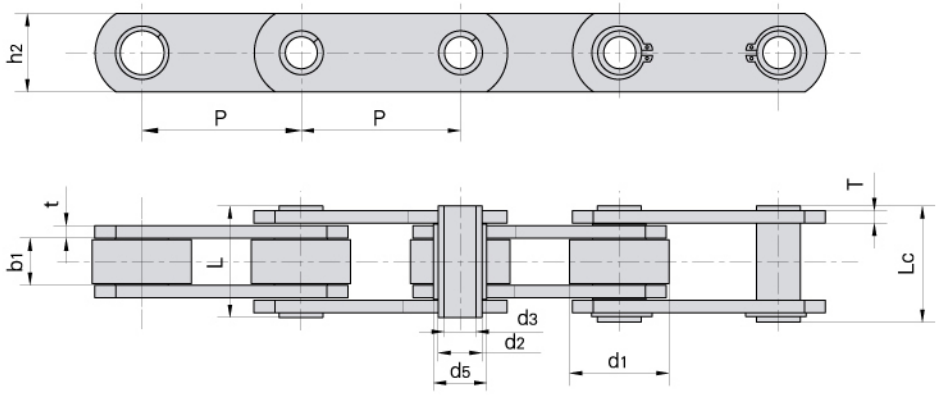

without rollers
ohne Rollen

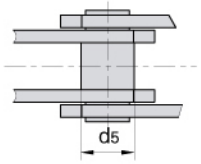

With P large rollers type
mit P-Laufrollen

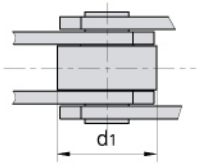

with F langed rollers type
mit F-Bundlaufrollen

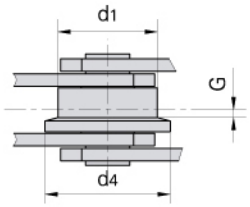

Donghua Chain No. *Donghua Ketten Nr.*	Pitch *Teilung* P mm							Roller dimension *Rollen-abmessungen* d1 max mm	d4 max mm	G mm	Bush diameter *Buchsen-durchmesser* d5 max mm	Plate depth *Laschen-höhe* h2 max mm
ZC21	38.1	50.8	63.5	76.2	–	–	–	25.40	–	–	11.0	18.0
ZC40	50.8	63.5	76.2	88.9	101.6	127.0	152.4	31.75	40.0	2.5	17.0	25.0
ZC60	76.2	88.9	101.6	127.0	152.4	177.8	203.2	47.50	60.0	3.5	23.0	40.0
ZC150	101.6	127.0	152.4	177.8	203.2	228.6	254.0	66.70	82.0	4.0	33.0	50.0
ZC300	152.4	177.8	203.2	254.0	304.8	–	–	88.90	114.0	8.5	38.0	60.0

Donghua Chain No. *Donghua Ketten Nr.*	Width between inner plates *Innere Breite* b1 min mm	Pin diameter *Bolzen-durchmesser* d2 max mm	d3 min mm	Pin length *Bolzen-länge* L max mm	Lc max mm	Plate thickness *Laschen-dicke* t/T max mm	Breaking load *Min. Bruchkraft* Q min kN/LB	*Q min kN/LB
ZC21	12.7	9.0	6.5	26.0	27.5	2.5	21.0/4772	27.1/6159
ZC40	15.0	14.0	10.2	36.4	37.7	4.0	40.0/9091	50.0/11362
ZC60	19.0	19.0	13.2	45.0	46.5	5.0/4.0	60.0/13636	120.0/27270
ZC150	26.0	26.9	20.2	58.0	60.5	7.0/5.0	150.0/34087	190.0/43177
ZC300	38.0	32.0	22.5	83.0	85.0	10.0/8.0	300.0/68175	380.0/86362

*Q Higher breaking load with hardened plates
**Q höhere Bruchkraft durch gehärtete Laschen.*

Conveyor chains
Förderketten

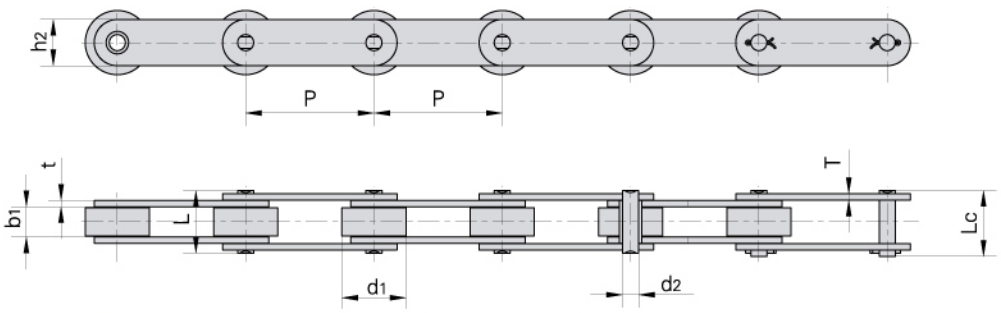

Donghua Chain No. *Donghua Ketten Nr.*	Pitch *Teilung*	Roller diameter *Rollen-durch-messer*	Width between inner plates *Innere Breite*	Pin diameter *Bolzen-durch-messer*	Pin length *Bolzen-länge*		Inner plate depth *Laschen-höhe*	Plate thickness *Laschen-dicke*	Ultimate tensile strength *Min. Bruchkraft*	Average tensile strength *Durchschn. Bruchkraft*	Weight per meter *Gewicht*
	P	d_1 max	b_1 min	d_2 max	L max	Lc max	h_2 max	t / T max	Q min	Q_0	q
	mm	mm	mm	mm	mm	mm	mm	mm	kN/LB	kN	kg/m
P15.875	15.875	12.70	11.00	3.66	18.70	19.90	8.00	0.60	3.0/674	3.3	0.80
P19.05F1	19.050	11.91	9.90	5.72	26.00	28.60	17.00	3.00	30.0/6750	33.0	1.84
P19.05F5	19.050	14.20	12.70	7.10	29.50	31.70	19.00	3.25	30.0/6744	33.0	2.47
P19.05F6	19.050	14.24	12.72	7.80	31.50	31.50	18.80	4.00/3.10	58.8/13218	64.7	2.67
*P20F1	20.000	12.00	16.00	6.00	32.10	34.50	18.00	3.00	35.5/7986	39.1	2.11
P22	22.000	14.00	14.00	8.00	37.00	40.00	40.00	5.00/4.00	40.0/9000	44.0	4.10
P25F4	25.000	15.00	18.00	7.00	34.50	37.50	21.00	3.00	45.0/10116	49.5	2.55
P25.4F5	25.400	14.00	12.70	7.50	30.00	33.00	22.50	3.50/3.00	50.0/112450	55.0	2.47
P25.4F8	25.400	12.70	12.70	7.00	28.50	30.50	20.80	3.00	45.0/10116	49.5	1.89
P25.4F9	25.400	14.00	12.70	7.00	28.50	30.50	19.70	3.00	45.0/10116	49.5	1.88
*P30	30.000	15.88	17.02	8.28	35.60	38.70	20.00	3.50/3.00	60.0/13500	66.0	2.35
*P30F1	30.000	15.88	9.70	8.28	24.80	65.50	22.00	3.10/2.50	45.0/10123	49.5	1.87
*P35F4	35.000	18.00	18.00	8.28	35.40	38.30	24.00	3.00	60.0/13500	66.0	2.51
P35F7	35.000	22.00	22.00	11.00	45.00	50.30	31.00	4.50	84.0/18883	92.4	4.82
P38.1F11	38.110	25.40	21.50	12.00	40.00	43.90	35.00	3.00	70.0/15750	77.0	5.18
P38.1F17	38.100	25.40	23.00	12.00	41.50	46.00	35.00	3.00	70.0/15736	77.0	5.25
P38.1F19	38.100	25.40	22.00	12.00	40.00	43.90	35.00	3.00	70.0/15736	77.0	5.18
P41F1	41.000	19.05	26.90	10.19	44.10	48.50	27.00	3.00	50.0/11240	55.0	2.87
P41.3F6	41.300	16.00	10.00	9.00	27.00	30.00	21.00	3.00	40.0/9000	44.0	1.80
P41.3F4	41.300	16.00	12.00	9.00	26.30	29.80	22.00	2.00	45.0/10116	49.5	1.72
P41.3F11	41.300	16.00	10.00	9.00	26.00	29.50	21.00	3.00	40.0/8992	44.0	1.79
P41.3F12	41.300	16.00	7.80	9.00	21.00	24.00	21.00	2.03	26.7/6002	29.4	1.29
P41.3F13	41.300	16.00	16.00	9.00	33.00	36.50	21.00	3.00	40.0/8992	44.0	2.00
P41.4F2	41.400	15.88	20.40	9.00	38.00	41.50	26.00	3.00	50.0/11240	55.0	2.29
P42	42.010	22.23	25.40	11.10	–	55.25	28.50	4.80	100.0/22496	110.0	5.36
P42F1	42.010	22.23	25.40	11.10	50.30	54.30	28.50	4.80	90.0/20456	99.0	5.26

*"∞" sharp plates
* "∞" *taillierte Laschen*

Conveyor chains
Förderketten

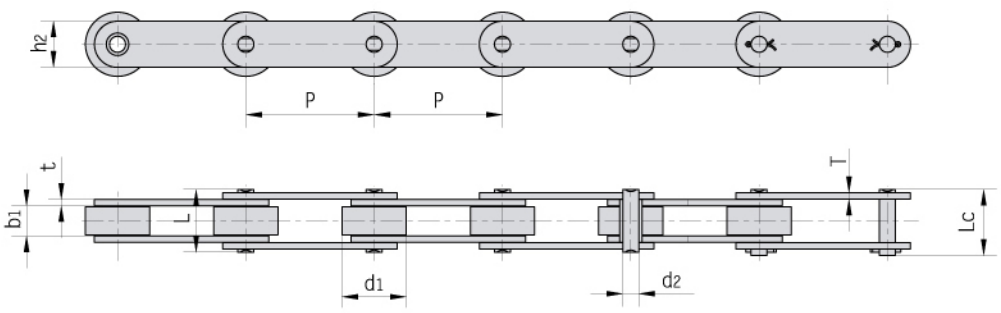

Donghua Chain No. *Donghua Ketten Nr.*	Pitch *Teilung*	Roller diameter *Rollen-durch-messer*	Width between inner plates *Innere Breite*	Pin diameter *Bolzen-durch-messer*	Pin length *Bolzen-länge*		Inner plate depth *Laschen-höhe*	Plate thickness *Laschen-dicke*	Ultimate tensile strength *Min. Bruchkraft*	Average tensile strength *Durchschn. Bruchkraft*	Weight per meter *Gewicht*
	P	d_1 max	b_1 min	d_2 max	L max	Lc max	h_2 max	t / T max	Q min	Q_0	q
	mm	mm	mm	mm	mm	mm	mm	mm	kN/LB	kN	kg/m
P44F1	44.00	25.30	25.00	15.90	86.00	86.00	38.00	10.00	250.0/56202	275.0	8.77
P44.45F1	44.45	22.23	24.70	11.10	62.00	65.50	32.00	6.70	110.0/24745	121.0	7.30
P44.45	44.45	22.23	12.57	5.94	25.90	27.70	18.00	2.42	31.8/7148	35.0	1.73
P45F4	45.00	19.05	19.56	9.53	41.20	45.50	30.00	4.00	75.0/16860	82.5	3.93
P49.8	49.80	28.58	31.55	14.27	64.80	69.60	47.80	6.40	222.4/50030	244.6	10.39
P50	50.00	25.40	25.40	14.63	54.30	57.80	40.00	5.00	100.0/22496	110.0	7.50
*P50F1	50.00	29.21	30.99	17.81	–	66.00	42.20	7.00	210.0/47726	231.0	9.68
P50F7	50.00	24.00	20.00	12.00	51.20	55.50	30.00	6.00	49.0/11023	54.0	5.65
P50F11	50.00	19.05	19.56	10.19	41.30	45.00	28.00	4.50/4.00	95.0/21371	104.5	3.60
P50F2	50.00	31.00	14.50	13.20	33.30	37.00	25.00	3.10	44.0/9891	48.4	3.47
P50F14	50.00	24.00	20.00	12.00	43.00	47.50	30.00	4.00	65.0/14612	71.5	5.08
P50F15	50.00	28.58	31.55	14.27	64.80	69.60	47.80	6.40	222.4/49997	244.6	10.38
P50F3	50.00	31.00	15.00	9.53	35.40	38.65	25.00	4.00	83.0/18659	91.3	4.12
P50F21	50.00	25.40	25.40	14.63	54.00	58.00	40.00	5.00	120.0/26977	132.0	7.35
P50.8F1	50.80	30.00	10.00	11.70	30.20	34.50	26.04	4.00	85.0/19108	93.5	3.60
P63F20	63.00	11.91	12.57	5.94	28.20	31.00	20.00	3.00	31.1/6991	34.2	2.43
P63.5	63.50	19.05	18.90	9.53	44.60	47.20	28.60	5.00	86.7/19704	95.4	3.77
P63.5F12	63.50	31.80	15.25	14.00	38.00	39.50	26.00	4.00	45.0/10116	49.5	4.03
*P69F1	69.85	15.88	17.02	8.28	36.70	39.70	20.60	4.00/3.25	60.8/13677	66.9	1.50
P69F3	69.00	15.88	17.00	8.28	35.20	38.50	20.60	4.00/3.25	60.8/13668	66.9	1.50
P69.85F1	69.85	31.75	25.40	14.27	66.40	73.50	34.93	7.90	170.0/38243	187.0	8.76
P75F8–G–2	75.00	31.80	16.10	8.00	40.00	40.00	22.00	3.20	60.8/13668	66.9	2.43
P76.2F2	76.20	50.00	26.00	24.00	69.60	74.70	59.50	8.00	350.0/79544	385.0	19.00
P76.2F10	76.20	11.91	11.00	5.94	280.00	30.40	18.50	3.25	31.8/7154	35.0	1.30
P76.2F25	76.20	43.18	49.28	23.90	130.00	130.00	60.45	14.20	697.0/156691	766.7	32.30
P76.2F35	76.20	12.07	13.00	8.10	24.50	26.50	18.00	1.85	29.0/6519	31.9	0.77

*"∞" sharp plates
* "∞" *taillierte Laschen*

Conveyor chains
Förderketten

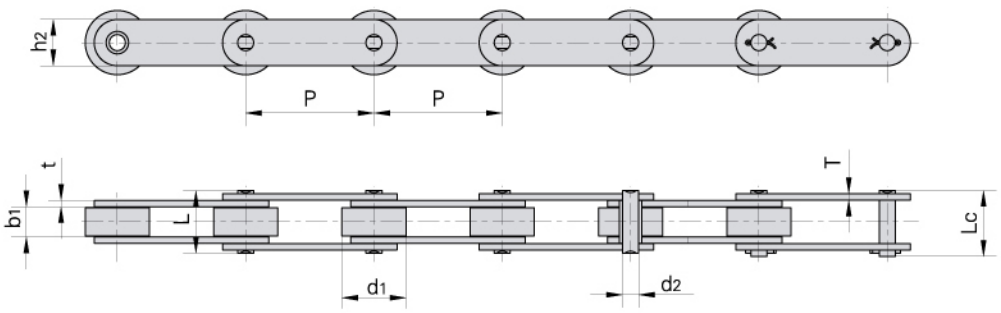

Donghua Chain No. *Donghua Ketten Nr.*	Pitch *Teilung*	Roller diameter *Rollen-durch-messer*	Width between inner plates *Innere Breite*	Pin diameter *Bolzen-durch-messer*	Pin length *Bolzen-länge*		Inner plate depth *Laschen-höhe*	Plate thickness *Laschen-dicke*	Ultimate tensile strength *Min. Bruchkraft*	Average tensile strength *Durchschn. Bruchkraft*	Weight per meter *Gewicht*
	P	d_1 max	b_1 min	d_2 max	L max	Lc max	h_2 max	t / T max	Q min	Q_0	q
	mm	mm	mm	mm	mm	mm	mm	mm	kN/LB	kN	kg/m
P78.11F11	78.11	31.75	31.75	15.88	86.5	86.5	38.1	9.53	161.6/36329	177.8	11.34
P80F1	80.00	42.00	24.00	15.00	55.0	60.0	60.0	6.00	250.0/56817	275.0	11.90
P80F5	80.00	28.00	34.00	16.00	68.0	72.0	45.0	5.00/8.00	190.0/43181	209.0	8.80
P80F6	80.00	30.00	32.00	15.00	58.6	62.6	60.0	5.00	98.0/22272	108.0	9.75
P80F10	80.00	42.00	22.00	15.00	53.0	58.0	60.0	6.00	250.0/56817	275.0	11.40
P80F37	80.00	26.00	25.00	14.00	59.3	59.3	35.0	6.00/5.00	155.0/34845	170.5	5.72
P80F35	80.00	42.00	23.00	16.00	56.0	61.5	60.0	6.00	160.0/35969	176.0	11.50
P100H	100.00	20.00	28.00	14.00	–	62.0	40.0	5.00	103.0/23170	113.3	4.99
P100F7	100.00	29.00	30.00	14.50	–	71.0	38.1	6.00	95.0/21371	104.5	6.72
P100F25	100.00	25.40	31.50	14.00	62.6	77.5	38.1	6.00	95.0/21371	104.5	6.17
P100F52	100.00	38.00	18.00	9.53	47.0	49.3	32.0	5.00	86.7/19504	95.3	4.67
P100F53	100.00	52.00	21.00	14.00	46.0	51.0	40.0	5.00/4.00	110.0/24745	121.0	7.45
P100F56	100.00	35.00	13.50	10.00	–	46.0	30.0	5.00	70.0/15747	77.0	3.98
P100F77	100.00	38.00	17.50	11.30	48.0	48.0	32.0	4.50	65.0/14612	71.5	4.42
P100F84	100.00	38.00	22.00	9.50	57.5	57.5	35.0	6.00	70.0/15736	77.0	6.27
P100F92	100.00	60.00	38.00	20.00	81.0	94.0	47.0	8.00	220.0/49457	242.0	16.9
P100F111	100.00	29.00	30.00	14.50	71.0	71.0	38.1	6.00	95.0/21356	104.5	6.75
P100F122	100.00	38.00	17.50	11.30	41.8	45.9	32.0	4.50	65.0/14612	71.5	4.33
P101.6F4	101.60	66.70	25.40	26.90	59.2	80.0	51.0	7.10/5.10	134.0/30454	147.4	15.70
P101.6F18	101.60	31.75	15.00	10.00	37.0	41.0	25.0	4.00	40.0/9000	44.0	2.79
P101.6F24	101.60	47.60	22.20	11.11	47.8	52.2	32.0	4.50	75.0/16872	82.5	5.80
P101.6F46	101.60	50.80	29.40	17.50	72.0	77.0	44.5	7.90	177.9/40013	197.4	12.56
P101.6F71	101.60	38.10	25.40	11.10	51.1	55.2	28.7	4.80	52.5/11810	57.8	4.95
P101.6F73	101.60	47.60	19.10	19.00	53.6	58.0	38.1	6.00	66.7/15000	73.4	7.52
P101.6F51	101.60	44.45	28.70	11.10	54.5	60.8	28.7	4.80	53.7/12080	59.0	6.17
P101.6F69	101.60	38.10	23.80	12.70	–	65.1	33.0	6.40	100.0/22496	110.8	6.50
P103.45	103.45	45.21	32.51	23.88	99.0	109.0	63.5	12.70	500.0/112480	535.0	25.00
P103.89	103.89	66.68	57.15	33.32	–	148.0	88.9	15.88	500.0/112480	550.0	55.83

Conveyor chains
Förderketten

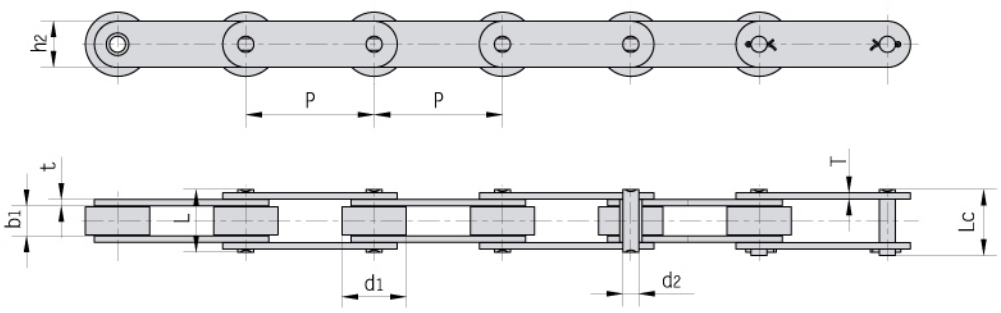

Donghua Chain No. *Donghua Ketten Nr.*	Pitch *Teilung*	Roller diameter *Rollen-durch-messer*	Width between inner plates *Innere Breite*	Pin diameter *Bolzen-durch-messer*	Pin length *Bolzen-länge*		Inner plate depth *Laschen-höhe*	Plate thickness *Laschen-dicke*	Ultimate tensile strength *Min. Bruchkraft*	Average tensile strength *Durchschn. Bruchkraft*	Weight per meter *Gewicht*
	P	d_1 max	b_1 min	d_2 max	L max	Lc max	h_2 max	t / T max	Q min	Q_0	q
	mm	mm	mm	mm	mm	mm	mm	mm	kN/LB	kN	kg/m
P125F1	125.0	50.00	55.00	26.00	–	110.00	60.00	8.00	300.0/68181	330.0	13.53
P125F2H	125.0	32.00	18.50	8.00	–	43.00	20.00	4.00	60.0/13497	66.0	2.65
P127F1	127.0	76.20	76.20	38.10	–	186.50	101.60	19.30	1690.0/380178	1860.0	73.85
P150F10	150.0	29.00	30.00	14.00	–	71.00	40.00	6.00	180.0/40492	198.0	5.71
P150F15	150.0	46.00	70.00	18.00	–	133.00	54.00	10.00	200.0/44991	220.0	17.25
RF10150–S	150.0	29.00	30.00	14.50	–	69.00	38.10	6.30	102.5/23295	112.7	6.00
P150.5	150.5	38.12	40.81	16.02	83.5	88.00	44.23	8.50	250.0/56817	275.0	10.00
P152F5	152.4	66.70	25.40	26.90	59.2	80.00	50.00	7.10/5.10	134.0/30454	147.4	12.10
P152F10	152.4	57.20	37.10	15.90	76.8	87.00	44.50	7.90	190.0/43181	209.0	11.29
P152F28	152.4	88.90	38.00	31.80	82.0	89.00	61.00	8.90/7.60	200.0/44992	220.0	23.30
P152F35	152.4	88.90	38.00	23.00	82.0	87.05	61.00	8.90/7.60	266.7/60000	293.4	22.65
P152F37	152.4	66.70	25.40	26.92	64.0	83.50	50.80	7.80/6.50	120.0/27000	132.0	12.22
P152F39	152.4	47.60	19.00	19.00	53.6	58.00	38.10	6.30	120.0/27000	132.0	6.26
P152F49	152.4	63.50	34.00	15.60	–	82.00	65.00	8.00	160.0/35993	176.0	16.30
P152F67	152.4	88.90	101.00	47.63	–	228.70	114.30	22.00	1350.0/303696	1445.0	101.30
P152F42	152.4	63.50	34.90	19.00	–	93.00	50.80	9.50	152.0/34194	168.9	15.80
P152F100	152.4	69.90	38.80	19.00	–	95.50	50.80	9.50	152.0/34194	168.9	17.76
*P154F1	154.0	44.45	85.60	28.60	–	150.00	80.00	12.50	500.0/112480	550.0	31.00
P160F15	160.0	64.00	37.00	15.00	–	100.40	45.00	8.50	160.0/35993	176.0	13.10
P160F16	160.0	69.85	38.10	27.00	–	101.00	50.80	9.00/8.00	160.0/35993	293.7	16.60
P160F16	160.0	69.85	38.10	27.00	–	101.00	50.80	9.00	267.0/60064	296.4	16.60
P160F27	160.0	69.85	38.10	17.53	–	81.00	50.80	6.30	244.0/54890	268.4	13.68
P200F10	200.0	100.00	47.00	25.00	–	103.50	72.00	10.00	308.7/69445	339.6	28.30
P200F15	200.0	40.10	51.40	19.10	–	109.50	50.80	9.50	213.0/47916	236.4	12.58
P228.6F9	228.6	107.95	77.70	31.75	–	173.60	88.90	16.00	598.0/134526	657.0	56.70
P250F36	250.0	100.00	57.20	22.23	–	117.00	63.50	9.50	314.0/70637	348.5	25.70

*Bushing chain: d_1 in the table indicate the external diameter of the bushing.
**Buchsenketten: In dieser Tabelle zeigt d_1 den Außendurchmesser der Buchsen.*

Conveyor chain with attachments
Förderketten mit Befestigungslaschen

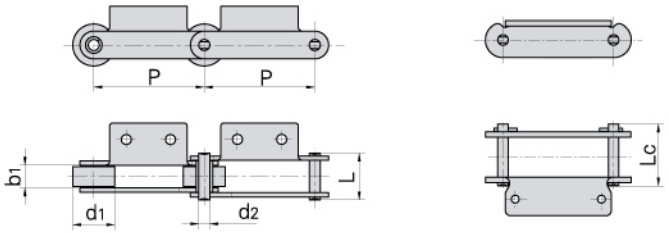

Donghua Chain No. *Donghua Ketten Nr.*	Pitch *Teilung*	Roller diameter *Rollen-durchmesser*	Width between inner plates *Innere Breite*	Pin diameter *Bolzen-durchmesser*	Pin length *Bolzen-länge*		Ultimate tensile strength *Min. Bruchkraft*	Average tensile strength *Durchschn. Bruchkraft*	Weight per meter *Gewicht*
	P	d_1 max	b_1 min	d_2 max	L max	Lc max	Q min	Q_0	q
	mm	mm	mm	mm	mm	mm	kN/LB	kN	kg/m
*P28	28.575	11.68	16.00	7.870	–	32.4	50.0/11364	55.0	2.66
*P28F1	28.575	11.68	16.13	7.870	–	32.4	50.0/11364	55.0	2.60
P38F10K1	38.000	15.88	13.00	8.280	32.5	35.5	55.0/12364	60.5	2.60
P38F11K1	38.000	15.88	13.00	8.280	30.5	33.5	45.0/10116	49.5	2.30
P38.1F2	38.100	22.50	13.00	8.000	29.5	33.3	40.0/9091	44.0	2.42
P39.75A1	39.750	17.25	22.00	7.800	40.5	44.3	47.0/10566	51.7	3.10
P41.3F9A2	41.300	22.00	11.00	9.000	28.6	31.6	40.0/8992	44.0	2.30
P42F2	42.000	11.00	13.00	6.000	30.0	32.5	50.0/11248	55.0	1.85
P42.5	42.500	15.88	15.75	7.920	32.7	36.5	56.7/12886	62.0	3.40
P44.45F5	44.450	25.40	16.51	7.920	36.2	38.9	35.0/7874	38.5	3.85
P44.45F7A1	44.450	28.58	15.00	9.530	34.5	38.7	45.0/10116	49.5	3.80
P46	46.000	16.00	16.00	8.000	36.0	39.0	55.0/12373	60.5	3.23
P50F16	50.000	24.90	10.70	7.800	26.6	28.8	33.0/7418	36.3	2.22
P50.8F22A1–F	50.800	32.00	15.00	11.700	39.0	43.0	50.0/11240	55.0	6.13
P75F6	75.000	16.00	16.00	8.000	–	41.0	32.0/7200	35.2	2.44
P75F8A2	75.000	31.80	16.00	8.000	–	41.0	32.0/7200	35.2	3.52
P75F8A2–F	75.000	30.00	16.00	8.000	–	41.0	32.0/7200	35.2	3.80
P75F20A1	75.000	40.00	22.00	12.000	47.0	52.0	90.0/20232	99.0	6.81
P76.2F1	76.200	31.75	15.00	14.200	–	44.2	60.0/13500	66.0	4.45
P78.11F8	78.110	31.80	37.10	15.000	–	83.5	100.0/22727	110.0	12.05
P78.11F9	78.110	31.75	38.10	15.875	–	90.0	90.0/20246	99.0	11.28
P80F4	80.000	30.00	15.00	13.900	42.5	46.5	86.0/19346	95.0	3.97
P80F4–P	80.000	45.00	15.00	13.900	42.5	46.5	86.0/19345	94.6	5.67
P100F1	100.000	42.00	23.00	9.530	52.0	54.3	86.7/19704	95.0	6.06
P100F2	100.000	36.00	18.00	9.530	47.0	49.3	86.7/19704	95.0	4.60
P100F3	100.000	29.00	30.00	14.500	–	71.0	95.0/21591	105.0	9.46
P100F4	100.000	40.00	22.00	11.300	–	53.5	65.0/14773	72.0	5.13
P100F5	100.000	22.20	22.00	11.300	–	53.5	65.0/14773	72.0	3.90
P100F12	100.000	45.00	37.00	12.000	64.0	67.0	150.0/34091	165.0	10.30
P100F15	100.000	38.00	25.80	10.700	–	57.0	45.0/10227	50.0	5.25
P100F33	100.000	40.00	27.00	11.300	–	64.8	100.0/22727	110.0	6.80
P100F41A2	100.000	45.00	25.40	12.700	–	63.8	80.0/17997	88.0	8.26
P100F50	100.000	36.00	29.00	15.000	70.0	76.0	200.0/44992	220.0	13.93

*Bushing chain: d_1 in the table indicate the external diameter of the bushing.
**Buchsenketten: In dieser Tabelle zeigt d_1 den Außendurchmesser der Buchsen.*

Conveyor chain with attachments
Förderketten mit Befestigungslaschen

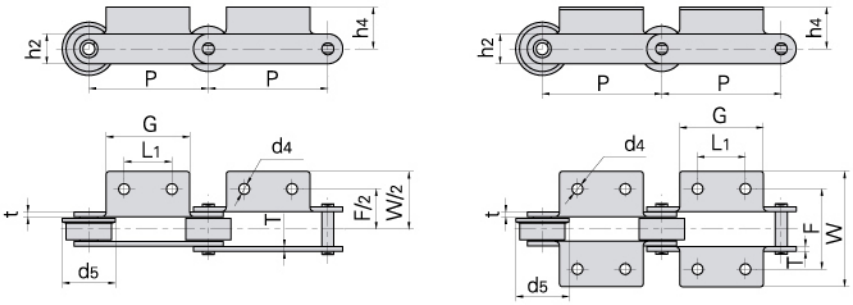

Donghua Chain No. *Donghua Ketten Nr.*	P	L1	G	F	W	h4	h2	d4	t/T	d5
	mm	mm	mm	mm	mm	mm	mm	mm	mm	mm
*P28	28.575	28.58	51.00	46.74	61.20	13.70	22.23	8.75	3.10	–
*P28F1	28.575	28.58	50.80	46.80	61.86	12.70	22.23	9.02	3.10	–
P38F10K1	38.000	△	30.00	49.00	79.00	16.50	21.00	8.40	3.5	–
P38F11F1	38.000	△	30.00	47.00	77.00	16.50	21.00	8.40	3.00	–
P38.1F2	38.100	△	28.00	56.00	76.00	17.20	19.00	9.00	3.00	–
P39.75A1	39.750	△	61.00	62.10	94.10	16.50	21.25	11×8	3.50	–
P41.3F9A2	41.300	12.00	24.00	36.20	48.20	17.00	21.00	5.50	3.00	–
P42F2	42.000	△	35.00	40.00	76.00	12.80	17.00	6.00	3.00	–
P42.5	42.500	19.00	38.00	53.50	70.00	19.50	22.00	7.00	3.25	–
P44.45F5	44.450	△	34.93	57.16	74.46	19.05	19.05	8.00	3.80	–
P44.45F7A1	44.450	△	22.00	66.00	84.80	12.80	25.60	7.00	3.00	–
P46	46.000	△	38.00	54.00	82.80	18.00	22.00	6.00	4.00	–
P50F16	50.000	△	41.30	45.00	61.40	36.00	20.00	6.50	3.00	–
P50.8F22A1–F	50.800	△	45.00	75.00	110.40	20.00	26.40	9.00	4.50	40.00
P75F6	75.000	30.00	55.00	60.00	92.00	20.00	22.00	10.00	3.00	–
P75F8A2	75.000	30.00	55.00	60.00	92.00	20.00	22.00	10.00	3.20	–
P75F8A2–F	75.000	30.00	55.00	60.00	92.00	20.00	22.00	10.00	3.20	38.00
P75F20A1	75.000	△	55.00	64.00	92.00	25.00	32.00	M8	4.50	50.00
P76.2F1	76.200	31.00	58.00	75.40	107.00	21.25	29.00	10.50	4.50	–
P78.11F8	78.110	30.00	65.00	120.00	150.00	35.00	38.10	12.00	7.90	–
P78.11F9	78.110	38.10	116.60	104.60	133.30	31.75	38.10	14.30	7.90	–
P80F4	80.000	40.00	70.20	57.40	87.40	22.95	27.10	8.50	5.60/4.15	–
P80F4–P	80.000	40.00	70.20	57.40	87.40	22.95	27.10	8.50	5.60/4.15	–
P100F1	100.000	78.00	96.00	73.00	103.00	17.50	32.00	7.00	5.00	–
P100F2	100.000	40.00	70.00	68.00	98.00	17.50	32.00	9.00	5.00	–
P100F3	100.000	40.00	70.00	100.00	128.00	28.00	38.10	12.00	6.00	–
P100F4	100.000	40.00	65.00	70.00	94.00	22.00	32.00	10.00	4.50	–
P100F5	100.000	40.00	65.00	70.00	94.00	22.00	32.00	10.00	4.50	–
P100F12	100.000	60.00	90.00	98.00	128.00	34.00	40.00	11.50	5.00	64.00
P100F15	100.000	29.85	65.00	75.00	115.60	20.00	28.00	9.00	4.80	–
P100F33	100.000	40.00	65.00	78.30	102.30	24.30	32.00	10.00	6.00	50.00
P100F41A2	100.000	40.00	70.00	80.00	126.00	25.00	31.80	12.00	6.30	60.00
P100F50	100.000	40.00	70.00	156.00	196.00	43.00	60.00	9.00	8.00	–

△ Attachments with 1 hole
△ *Befestigungslaschen mit einem Loch*

*Bushing chain: d1 in the table indicate the external diameter of the bushing.
**Buchsenketten: In dieser Tabelle zeigt d1 den Außendurchmesser der Buchsen.*

Conveyor chain with attachments
Förderketten mit Befestigungslaschen

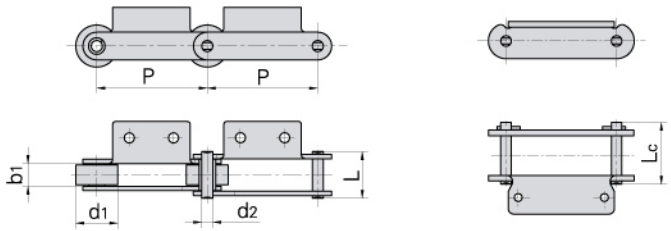

Donghua Chain No. *Donghua Ketten Nr.*	Pitch *Teilung*	Roller diameter *Rollen-durchmesser*	Width between inner plates *Innere Breite*	Pin diameter *Bolzen-durchmesser*	Pin length *Bolzen-länge*		Ultimate tensile strength *Min. Bruchkraft*	Average tensile strength *Durchschn. Bruchkraft*	Weight per meter *Gewicht*
	P	d_1 max	b_1 min	d_2 max	L max	Lc max	Q min	Q_0	q
	mm	mm	mm	mm	mm	mm	kN/LB	kN	kg/m
P100F75	100.0	26.00	22.00	10.700	–	55.0	45.0/10116	50.0	4.75
P100F82A1	100.0	31.80	16.10	8.000	–	41.0	32.0/7200	35.2	3.07
P100F93	100.0	40.00	22.00	11.300	–	59.5	86.0/19333	94.6	8.07
P100F94K1	100.0	47.60	26.00	27.000	61.0	70.0	160.0/35993	176.0	12.9
P100F95A2	100.0	32.00	14.00	11.100	32.5	36.0	60.0/13500	66.0	3.11
P100F99K2	100.0	40.00	22.00	11.100	48.4	53.4	65.0/14612	71.5	5.54
P100F104	100.0	40.00	22.00	11.300	–	60.7	146.0/32822	160.6	7.33
P100F108K2	100.0	40.00	22.00	11.300	–	53.5	65.0/14612	71.5	5.80
P100F109A2	100.0	45.00	21.00	14.000	48.0	53.0	50.0/11240	55.0	6.94
P100F101A2	100.0	22.20	24.00	11.100	57.5	62.7	70.0/15736	77.0	5.50
*P101.6F1	101.6	25.00	55.00	16.000	–	110.0	60.0/13636	66.0	11.90
P101.6F9	101.6	31.75	15.00	14.200	–	44.2	66.7/15159	73.0	8.40
*P101.6F17K2	101.6	25.40	55.60	15.880	–	115.0	180.0/40492	198.0	12.40
*P101.6F18A2	101.6	31.75	15.00	10.000	37.0	41.0	40.0/9000	44.0	3.66
P101.6F21	101.6	38.10	53.80	15.875	–	112.2	180.0/40492	198.0	14.90
P101.6F25	101.6	36.50	50.80	19.050	–	112.0	200.0/44992	220.0	18.10
P101.6F30A2	101.6	38.00	22.00	10.000	–	52.8	100.0/22727	110.0	5.19
P101.6F35	101.6	66.70	25.00	25.400	61.0	66.0	160.0/35993	176.0	15.73
P101.6F36	101.6	57.15	33.40	15.880	–	92.0	180.0/40492	198.0	14.33
P101.6F39	101.6	57.15	33.30	16.000	82.0	89.0	127.0/28570	140.0	17.70
P101.6F40A2	101.6	38.10	21.00	10.000	–	52.0	50.0/11248	55.0	4.69
P101.6F41K1	101.6	44.50	27.00	11.300	–	67.0	78.0/17546	86.0	10.20
P101.6F43A2	101.6	50.00	16.00	16.000	49.0	53.5	145.0/32620	160.0	7.95
P101.6F54K1	101.6	57.15	33.30	16.000	–	89.0	177.8/39998	197.4	17.86
P101.6F56K2	101.6	32.00	54.50	16.000	–	115.0	180.0/40493	199.8	16.51
P101.6F57K3	101.6	57.15	31.75	15.900	–	67.4	166.0/37343	191.2	13.90
P101.6F62K1	101.6	57.15	33.30	16.000	–	89.0	177.8/39998	197.4	18.83
P101.6F69K3	101.6	38.10	23.80	12.700	–	65.1	100.0/22496	110.8	8.34
P101.6F76	101.6	57.15	31.56	16.000	56.2	62.0	82.6/18582	91.7	11.57
P101.6F80A2	101.6	44.50	31.60	15.900	–	81.0	130.0/29245	144.3	11.36
P101.6F84A2	101.6	50.80	30.23	11.180	–	62.0	80.36/18078	89.2	9.04
P117	117.0	35.00	50.00	17.000	–	102.0	150.0/33744	166.5	13.40
P120	120.0	50.00	28.00	12.000	54.0	58.0	160.0/35993	176.0	8.14

*Bushing chain: d_1 in the table indicate the external diameter of the bushing.
**Buchsenketten: In dieser Tabelle zeigt d_1 den Außendurchmesser der Buchsen.*

Conveyor chain with attachments
Förderketten mit Befestigungslaschen

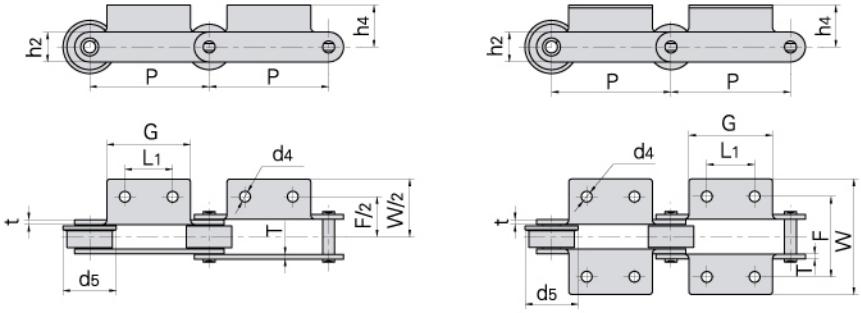

Donghua Chain No. *Donghua Ketten Nr.*	P	L1	G	F	W	h4	h2	d4	t/T	d5
	mm	mm	mm	mm	mm	mm	mm	mm	mm	mm
P100F75	100.0	29.85	65.0	68.0	112.0	20.00	28.00	12 × 9	4.80	–
P100F82A1	100.0	△	65.0	60.0	92.0	20.00	22.00	10.00	3.20	42.0
P100F93	100.0	40.00	70.0	100.0	124.0	30.00	32.00	100.00	6.00	–
P100F94K1	100.0	△	35.0	85.0	116.0	38.50	55.00	13.00	7.00/5.00	–
P100F95A2	100.0	30.00	51.0	76.0	104.0	18.00	30.00	9.00	3.00	–
P100F99K2	100.0	40.00	65.0	70.0	104.0	22.00	32.00	9.50	4.80	–
P100F104	100.0	40.00	65.0	70.0	104.0	23.60	32.00	10.00	6.30	–
P100F108K2	100.0	40.00	65.0	70.0	94.0	35.00	32.00	10.00	4.50	–
P100F109A2	100.0	40.00	60.0	110.0	130.0	17.50	35.00	6.40	5.00	–
P100F101A2	100.0	41.00	65.0	86.0	134.0	24.50	33.00	9.000	6.00	–
*P101.6F1	101.6	44.00	73.0	136.0	165.0	30.00	40.00	11.00	10.00	–
P101.6F9	101.6	31.00	65.0	75.4	107.0	21.25	29.00	10.50	4.50	–
*P101.6F17K2	101.6	44.50	84.0	136.0	172.0	25.40	38.00	11.00	10.00	–
*P101.6F18A2	101.6	30.00	60.0	76.0	124.0	19.00	25.00	10.50	4.00	–
P101.6F21	101.6	44.50	141.2	134.9	177.8	28.70	38.10	14.00	9.65	–
P101.6F25	101.6	44.45	152.4	140.7	171.6	41.28	44.45	13.50	9.50	–
P101.6F30A2	101.6	40.00	70.0	80.0	107.0	22.00	30.00	11.50	5.00	–
P101.6F35	101.6	50.00	70.0	107.0	127.0	40.00	51.00	10.00	6.00	–
P101.6F36	101.6	△	50.8	98.4	142.9	32.00	38.10	14.30	9.50	–
P101.6F39	101.6	△	50.8	101.6	146.4	31.75	38.10	14.20	9.65	–
P101.6F40A2	101.6	40.00	70.0	80.0	108.0	22.00	25.00	12.00	5.00	–
P101.6F41K1	101.6	△	70.0	100.0	128.0	28.00	28.60	12.00	6.30	–
P101.6F43A2	101.6	32.00	56.0	80.0	112.0	20.00	40.00	9.50	6.00	–
P101.6F54K1	101.6	–	50.8	101.6	146.4	31.75	38.10	14.20	9.65	–
P101.6F56K2	101.6	45.00	81.0	142.2	179.2	32.50	45.00	11 × 15	10.00	–
P101.6F57K3	101.6	50.80	82.6	101.6	132.5	36.50	44.45	10.3/15	6.40	–
P101.6F62K1	101.6	–	50.8	101.6	146.4	31.75	41.30	14.20	9.65	–
P101.6F69K3	101.6	38.10	68.0	69.9	103.2	22.20	33.00	10.30	6.40	–
P101.6F76	101.6	60.00	76.2	70.0	101.2	35.00	38.10	5.00	4.00	70.0
P101.6F80A2	101.6	40.00	80.0	110.0	146.0	35.00	38.10	15.00	8.00	–
P101.6F84A2	101.6	50.80	79.5	101.6	133.6	28.70	31.80	9.60	4.80	–
P117	117.0	90.00	160.0	136.0	176.0	35.00	40.00	14.00	8.00	–
P120	120.0	50.00	75.0	82.0	119.6	20.00	40.00	7.00	5.00	59.0

△ Attachments with 1 hole
△ *Befestigungslaschen mit einem Loch*

*Bushing chain: d1 in the table indicate the external diameter of the bushing.
**Buchsenketten: In dieser Tabelle zeigt d1 den Außendurchmesser der Buchsen.*

Conveyor chain with attachments

Förderketten mit Befestigungslaschen

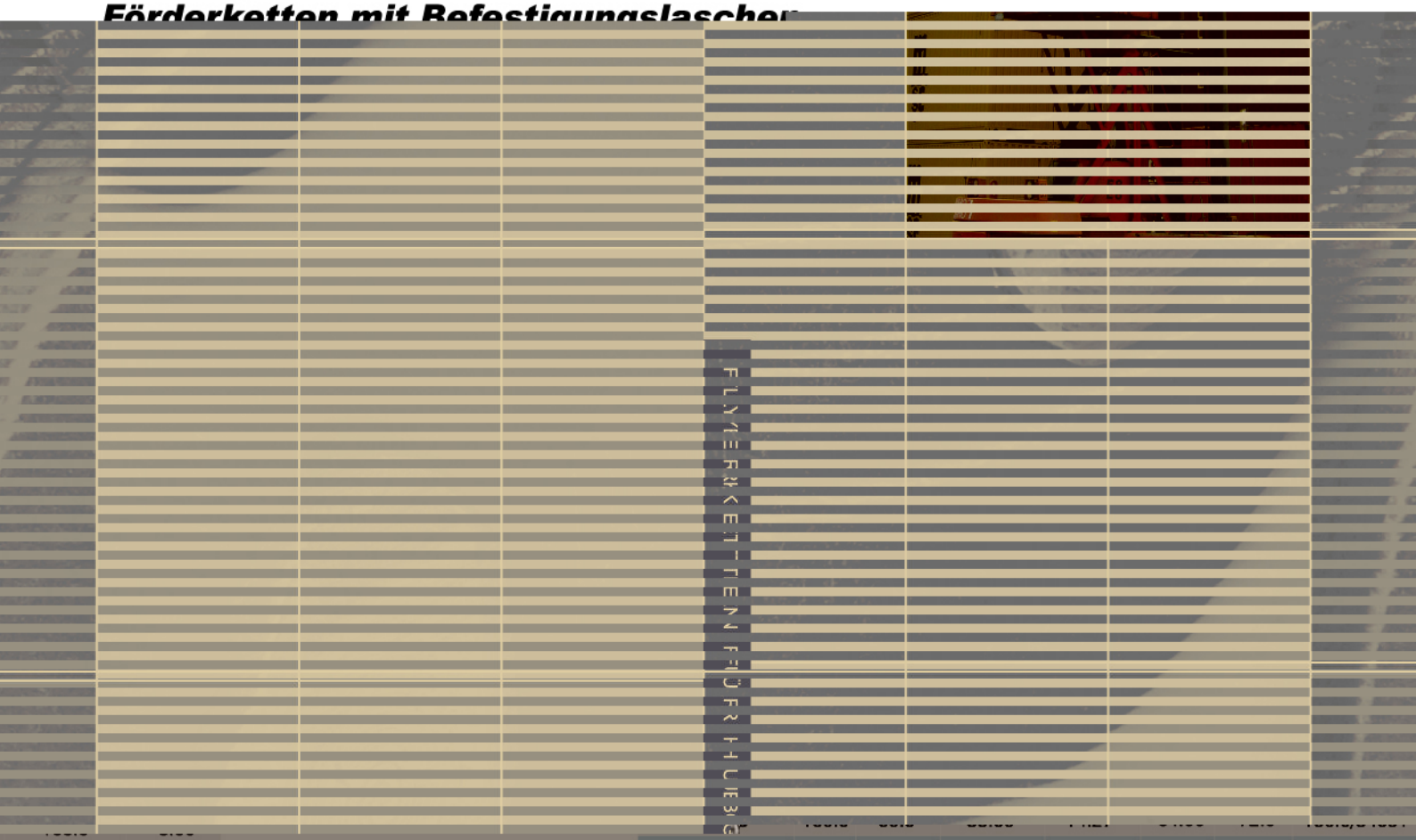

61.0	4.58
109.5	14.93
109.5	7.65
115.5	6.41
77.0	8.42
188.7	9.69
137.0	9.78
188.7	15.23
198.0	26.10
234.3	12.60
188.7	11.57
188.7	19.60
188.7	11.08
130.8	10.80
306.9	14.20
528.1	37.00
124.3	6.47
188.7	8.40

P160F8	160.0	40.0	20.00	11.00	50.00	–	55.0/12500
P160F18	160.0	50.0	34.00	20.00	–	88.0	100.0/22496
P160F25	160.0	70.0	25.00	14.25	55.50	60.5	100.0/22496
P160F26	160.0	50.0	29.90	13.94	–	60.0	105.0/23620
P185	185.0	50.8	30.60	14.27	62.80	67.5	70.0/15909
P200F6	200.0	50.0	37.00	16.00	77.50	82.5	170.0/38243
P200F7	200.0	40.0	27.00	11.10	57.00	61.0	124.6/28030
P200F8	200.0	65.0	37.00	16.00	86.50	–	170.0/38243
P200F13	200.0	80.0	51.00	20.00	106.00	–	180.0/40492
P200F15	200.0	40.1	51.40	19.10	109.50	–	213.0/47916
P200F23	200.0	65.0	36.50	16.00	–	86.5	170.0/38243
P200F22	200.0	90.0	48.00	16.00	–	99.0	170.0/38243
P200F26A2	200.0	50.0	37.00	16.00	85.50	90.5	170.0/38243
P200F30	200.0	65.0	38.00	18.00	–	79.5	120.0/26995
RF12200A2-F-200	200.0	65.0	37.10	15.90	–	86.5	279.0/62763
P203.2F6	203.2	88.9	45.97	25.40	–	116.3	489.0/110005
RF10250RA2	250.0	50.8	30.00	14.50	69.00	–	113.0/25420
P250F25	250.0	50.0	30.00	14.00	–	81.3	170.0/38243

Conveyor chain with attachments
Förderketten mit Befestigungslaschen

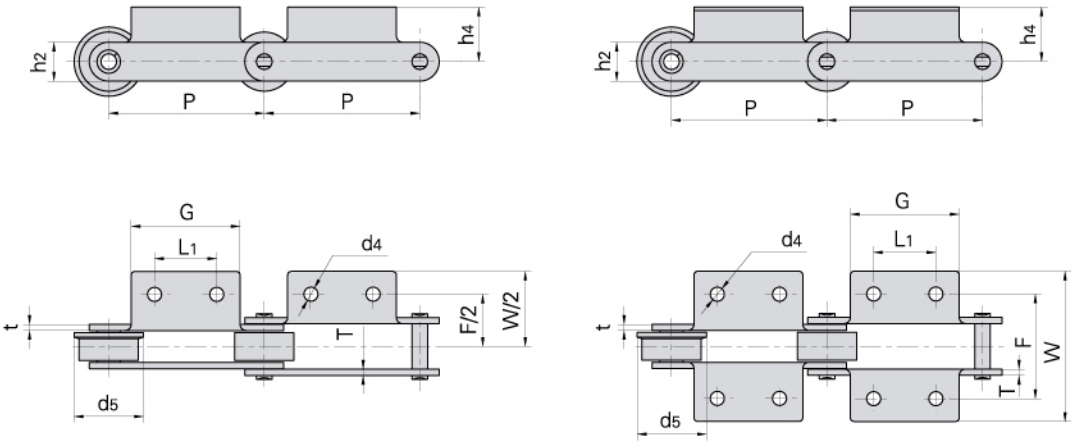

Donghua Chain No. *Donghua Ketten Nr.*	P	L1	G	F	W	h4	h2	d4	t/T	d5
	mm	mm	mm	mm	mm	mm	mm	mm	mm	mm
P160F3	160.0	49.0	70.0	83.00	117.0	32.5	35.0	8.5	6.0	–
P160F5	160.0	35.0	70.0	110.00	166.0	38.7	40.0	14.0	5.6	–
P160F8	160.0	80.5	133.0	56.00	100.0	16.0	32.0	8.33x13.30	4.5	–
P160F18	160.0	60.0	110.0	110.00	153.0	40.0	50.0	15.0	9.0	–
P160F25	160.0	–	120.0	70.00	89.0	27.5	36.0	10.0	5.6	–
P160F26	160.0	30.0	50.0	94.00	124.0	35.0	40.0	10.0	4.0	65.0
P185	185.0	60.0	120.0	110.00	140.0	32.0	38.0	15.0	6.0	65.0
P200F6	200.0	81.5	120.0	120.00	150.0	33.0	43.0	14.0	8.0	–
P200F7	200.0	81.5	120.0	92.00	122.0	22.0	32.0	10.0	6.0	–
P200F8	200.0	80.0	120.0	200.00	238.0	38.0	43.0	15.0	8.0	80.0
P200F13	200.0	110.0	150.0	152.00	204.0	43.0	50.0	13.0	9.0	–
P200F15	200.0	80.0	120.0	150.00	200.0	43.0	50.8	15.0	9.5	–
P200F23	200.0	80.0	120.0	120.00	170.0	38.0	43.0	15.0	8.0	–
P200F22	200.0	80.0	120.0	212.00	250.0	38.0	43.0	15.0	8.0	100.0
P200F26A2	200.0	81.5	120.0	120.00	154.0	33.0	43.0	14.0	10.0	–
P200F30	200.0	65.0	100.0	119.00	159.0	30.0	50.0	12.5/18.5	6.0	–
RF12200A2-F-200	200.0	80.0	120.0	120.00	158.0	38.0	44.5	15.0	7.9	80.0
P203.2F6	203.2	114.3	152.4	131.83	192.0	54.1	69.8	17.5	12.7	–
RF10250RA2	250.0	80.0	120.0	100.00	130.0	28.0	38.1	12.0	6.3	–
P250F25	250.0	60.0	93.0	108.00	143.6	30.0	38.0	10.0	8.0	–

Conveyor chain with attachments
Förderketten mit Befestigungslaschen

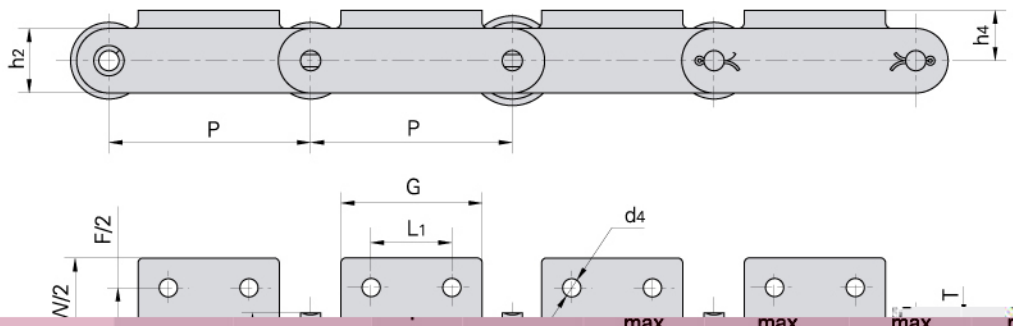

						max	max	max	max	min	
				mm		mm	mm	mm	mm	kN/LB	k
N	kg/m										
.6	0.64		LH0822	BL422		2 × 2				11.05	22.2/5045	27
.6	0.80		LH0823	BL423		2 × 3				13.16	22.2/5045	27
.4	1.12		LH0834	BL434		3 × 4				17.40	33.4/7591	41
6.0	1.28		LH0844	BL444	12.7	4 × 4	12.07	2.08	5.09	19.51	44.5/10114	56
6.0	1.60		LH0846	BL446		4 × 6				23.75	44.5/10114	56
.7	1.92		LH0866	BL466		6 × 6				27.99	66.7/15159	81
9.4	2.56		LH0888	BL488		8 × 8				36.45	89.0/20227	10
3.1	0.88		LH1022	BL522		2 × 2				12.90	33.4/7591	43
3.1	1.10		LH1023	BL523		2 × 3				15.37	33.4/7591	43
5.6	1.50		LH1034	BL534		3 × 4				20.32	48.9/11114	65
4.5	1.80		LH1044	BL544	15.875	4 × 4	15.09	2.44	5.96	22.78	66.7/15159	84
1.5	2.20		LH1046	BL546		4 × 6				27.74	66.7/15159	84

P100F4A2–F1	100.0	40.0	22.0	11.30	–	53.5	65.0/14612	71.5	5.52
P160	160.0	50.0	29.9	13.94	60.0	–	160.0/36364	176.0	7.23
P200F28	200.0	65.0	37.1	16.00	77.5	85.5	160.0/36364	176.0	14.10
P200F31	200.0	80.0	37.1	16.00	77.5	85.5	160.0/36364	176.0	18.10
P300	300.0	80.0	45.0	23.81	95.5	103.0	300.0/68181	320.0	24.32
P350	350.0	80.0	45.0	23.81	95.5	103.0	300.0/68181	320.0	23.60
P400F1	400.0	80.0	45.0	23.81	95.5	103.0	300.0/68181	320.0	22.67

Donghua Chain No. *Donghua Ketten Nr.*	L_1	G	F	W	h_4	h_2	d_4	T	d_5
	mm	mm	mm	mm	mm	mm	mm	mm	mm
M56F4–P–100	40.0	70.0	68.5	98.50	25.0	25.0	9.0	4.0	44.5
M56F7–P–100	40.0	70.0	71.5	92.00	55.0	25.0	6.5	4.0	45.0
M56F9–P–100	40.0	70.0	67.5	96.58	25.0	32.0	9.0	5.0	44.5
P100	40.0	65.0	98.0	128.00	35.0	40.0	10.0	4.0	65.0
P100F4A2–F1	40.0	65.0	70.0	94.00	22.0	32.0	10.0	4.5	50.0
P160	85.0	115.0	94.0	124.00	35.0	40.0	10.0	4.0	65.0
P200F28	80.0	120.0	120.0	158.00	63.0	44.5	12.0	8.0	80.0
P200F31	80.0	140.0	120.0	158.00	85.0	44.5	M10	8.0	100.0
P300	200.0	250.0	150.0	190.00	105.0	60.0	13.0	10.0	100.0
P350	250.0	300.0	150.0	190.00	105.0	60.0	13.0	10.0	100.0
P400F1	300.0	350.0	150.0	190.00	105.0	60.0	15.0	10.0	100.0

Conveyor chain with attachments
Förderketten mit Befestigungslaschen

Conveyor chains for coal yards
P315F11 Förderketten für den Kohlenlagerplatz

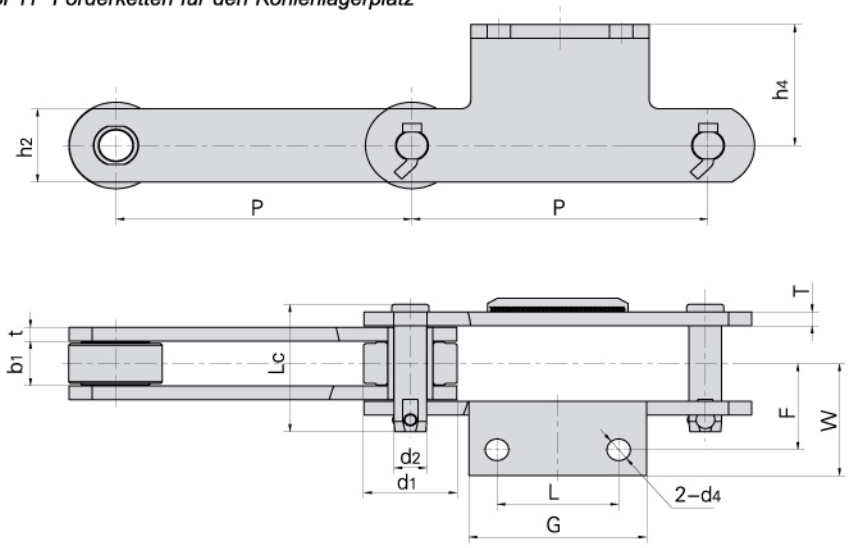

Donghua Chain No. *Donghua Ketten Nr.*	Pitch *Teilung*	Roller diameter *Rollen-durch-messer*	Width between inner plates *Innere Breite*	Pin diameter *Bolzen-durch-messer*	Pin length *Bolzen-länge*	Plate thickness *Laschen-dicke*	Ultimate tensile strength *Min. Bruchkraft*	Average tensile strength *Durchschn. Bruchkraft*
	P	d_1 max	b_1 min	d_2 max	Lc max	t/T	Q min	Q_0
	mm	mm	mm	mm	mm	mm	kN	kN
P315F11	315	100	52	35	148	16	800	900

Donghua Chain No. *Donghua Ketten Nr.*	P	L	G	F	W	h_4	h_2	d_4
	mm	mm	mm	mm	mm	mm	mm	mm
P315F11	315	130	190	100	130	140	85	25





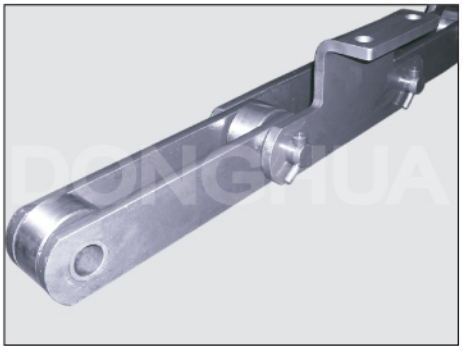

Conveyor chain with attachments
Förderketten mit Befestigungslaschen

P315 conveyor chain
P315 Förderketten

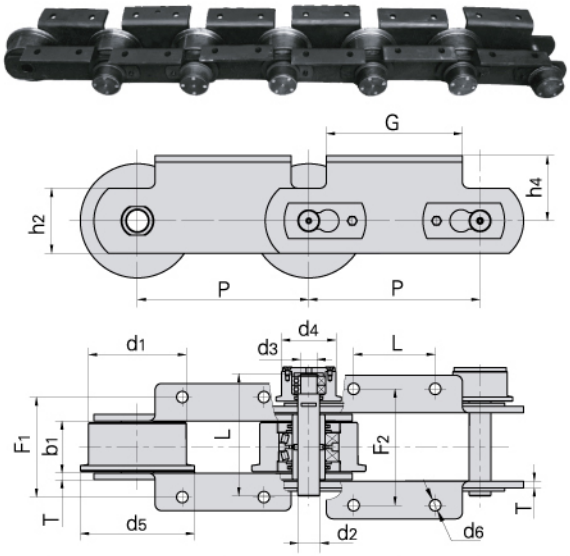

Donghua Chain No. *Donghua Ketten Nr.*	P	L	G	F_1	F_2	h_4	h_2	d_6	T
	mm	mm	mm	mm	mm	mm	mm	mm	mm
P315	315	150.0	250.0	180.0	206.0	120.0	120.0	21.0	12.0

Donghua Chain No. *Donghua Ketten Nr.*	Pitch *Teilung*	Roller diameter *Rollen-durchmesser*			Width between inner plates *Innere Breite*	Pin diameter *Bolzen-durch-messer*		Pin length *Bolzen-länge*	Ultimate tensile strength *Min. Bruchkraft*	Average tensile strength *Durchschn. Bruchkraft*
	P	d_1 max	d_4 max	d_5 max	b_1 min	d_2 max	d_3 max	L_1 max	Q min	Q_0
	mm	mm	mm	mm	mm	mm	mm	mm	kN/LB	kN
P315	315	180.0	100.0	210.0	90.0	40.0	30.0	217.0	100.0/22727	110.0

Steel chains for sewage disposal
Sonderketten für die Abwasserentsorgung

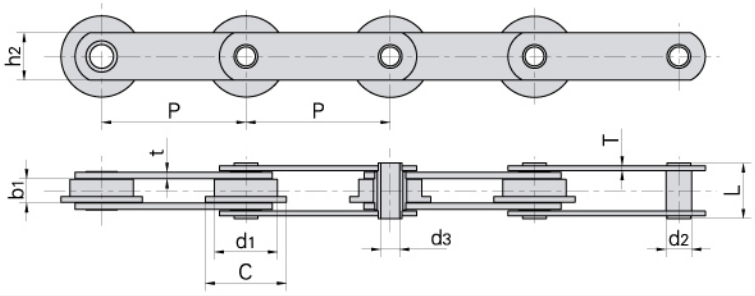

Donghua Chain No. *Donghua Ketten Nr.*	Pitch *Teilung*	Width between inner plates *Innere Breite*	Roller diameter *Rollen-durch-messer*		Pin diameter *Bolzen-durch-messer*		Pin length *Bolzen-länge*	Plate depth *Laschen-höhe*	Plate thickness *Laschen-dicke*		Ultimate tensile strength *Min. Bruchkraft*	Average tensile strength *Durchschn. Bruchkraft*	Weight per meter *Gewicht*
	P	b_1 min	d_1 max	C max	d_2 max	d_3 mon	L max	h_2 max	T max	t max	Q min	Q_0	q
	mm	mm	mm	mm	mm	mm	mm	mm	mm	mm	kN/LB	kN	kg/m
W152	152.4	25.40	66.7	85.7	27.1	20.0	58.8	50.0	5.0	7.0	110.0/25000	122.1	10.78

Special conveyor chains
Sonderförderketten

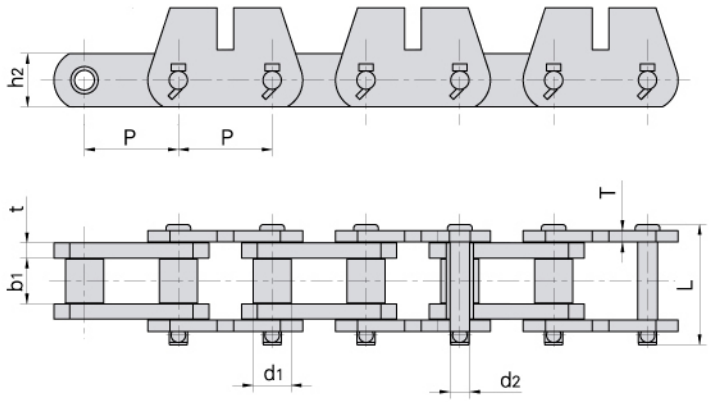

Donghua Chain No. *Donghua Ketten Nr.*	Pitch *Teilung*	Roller diameter *Rollen-durch-messer*	Width between inner plates *Innere Breite*	Pin diameter *Bolzen-durch-messer*	Pin length *Bolzen-länge*	Inner plate depth *Laschen-höhe*	Plate thickness *Laschen-dicke*	Ultimate tensile strength *Min. Bruchkraft*	Average tensile strength *Durchschn. Bruchkraft*	Weight per meter *Gewicht*
	P	d_1 max	b_1 min	d_2 max	L max	h_2 max	t/T max	Q min	Q_0	q
	mm	mm	mm	mm	mm	mm	mm	kN/LB	kN	kg/m
P78.11F10	78.105	31.75	38.1	16.46	102.0	44.45	12.7/9.5	333.4/75000	350.0	16.73
P101.6F28	101.600	38.10	50.8	17.48	122.0	44.45	12.7	266.7/60000	293.3	21.66
P152F18	152.400	69.85	76.2	25.40	152.0	63.50	12.7	500.0/112480	650.0	43.23
P152F24	152.400	69.85	76.2	25.40	152.0	63.50	12.7	565.0/127100	650.0	38.38

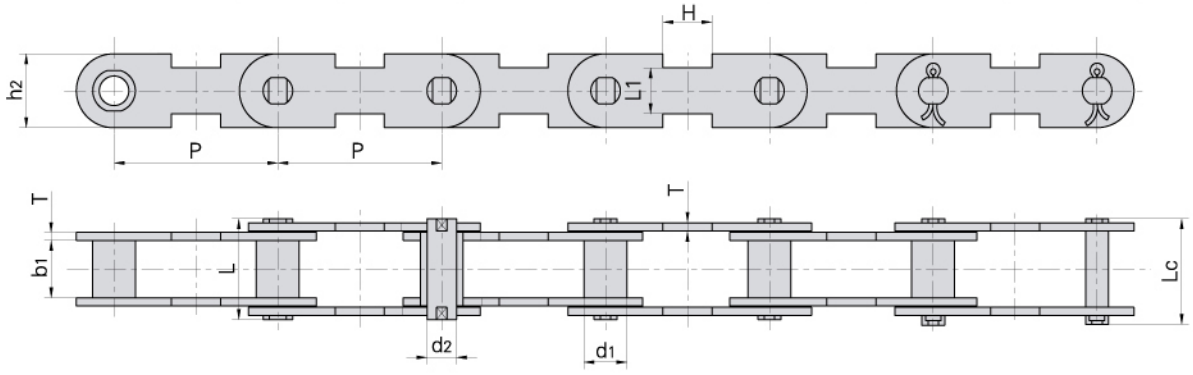

Donghua Chain No. *Donghua Ketten Nr.*	Pitch *Teilung*	Bush diameter *Buchsen-durch-messer*	Width between inner plates *Innere Breite*	Pin diameter *Bolzen-durch-messer*	Pin length *Bolzen-länge*		Inner plate depth *Laschen-höhe*	Plate thickness *Laschen-dicke*	Attachment dimension *Befestigungs-laschen-abmessungen*		Ultimate tensile strength *Min. Bruchkraft*	Weight per meter *Gewicht*
	P	d_1 max	b_1 min	d_2 max	L max	Lc max	h_2 max	T max	H	L_1	Q min	q
	mm	mm	mm	mm	mm	mm	mm	mm	mm	mm	kN/LB	kg/m
P100F49	100.0	20.0	25.0	14.0	51.5	55.0	35.0	5.0	30.0	28.0	90.0/20250	4.02
P100F54	100.0	26.0	35.0	18.0	65.5	71.0	45.0	6.0	30.0	28.0	100.0/22500	6.90

Universal movement conveyor chains
Kardanketten für Kreisförderer

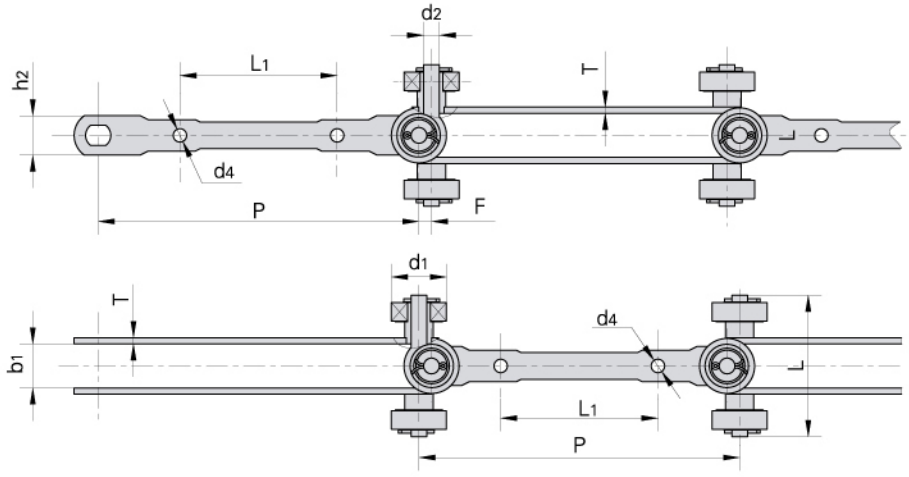

Donghua Chain No. *Donghua Ketten Nr.*	Pitch *Teilung*	Roller diameter *Rollen-durch-messer*		Width between inner plates *Innere Breite*	Pin diameter *Bolzen-durch-messer*	Pin lenght *Bolzen-länge*	plate dimension *Laschen-abmessungen*		Attachment dimension *Befestigungs-laschen-abmessungen*			Ultimate tensile strength *Min. Bruchkraft*
	P	d_1 max	d_4 max	b_1 min	d_2 max	L max	h_2 max	T max	L_1	d_4	F	Q min
	mm	mm	mm	mm	mm	mm	mm	mm	mm	mm	mm	kN/LB
P210	204.0	35.0		27.5	10.0	90.0	25.0	4.0	100.0	8.5	8.0	50.0/11364
SJ406S–50	203.2	35.0		27.5	10.0	90.0	25.0	4.0	100.0	8.5	11.0	50.0/11364

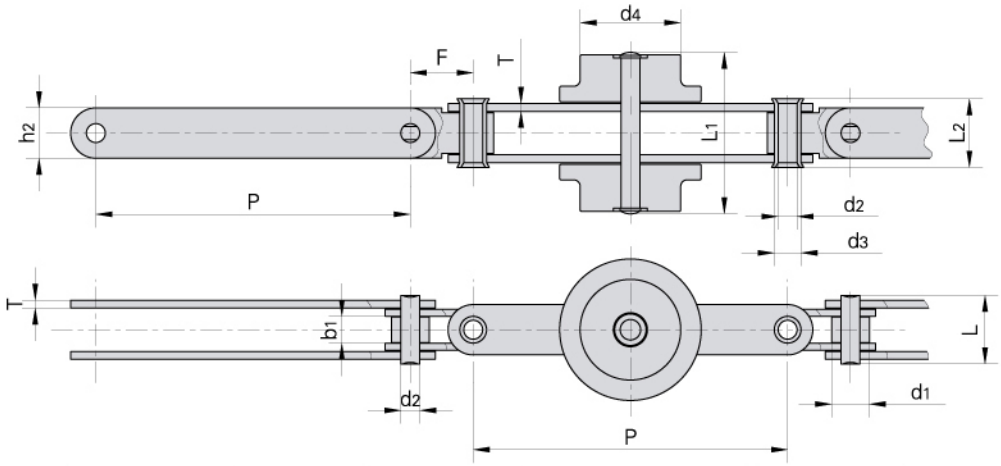

Donghua Chain No. *Donghua Ketten Nr.*	Pitch *Teilung*	Roller diameter *Rollen-durch-messer*		Width between inner plates *Innere Breite*	Pin diameter *Bolzen-durch-messer*		Pin lenght *Bolzen-länge*			plate dimension *Laschen-abmessungen*		Attachment dimension *Befestigungs-laschen-abmessungen*	Ultimate tensile strength *Min. Bruchkraft*
	P	d_1 max	d_4 max	b_1 min	d_2	d_3	L max	L_1 max	L_2 max	h_2 max	T max	F	Q min
	mm	mm	mm	mm	mm	mm	mm	mm	mm	mm	mm	mm	kN/LB
P100F11	100.0	12.0	32.0	8.6	6.0	8.5	22.0	53.0	22.0	16.0	2.5	20.0	20.0/4545

Universal movement conveyor chains
Kardanketten für Kreisförderer

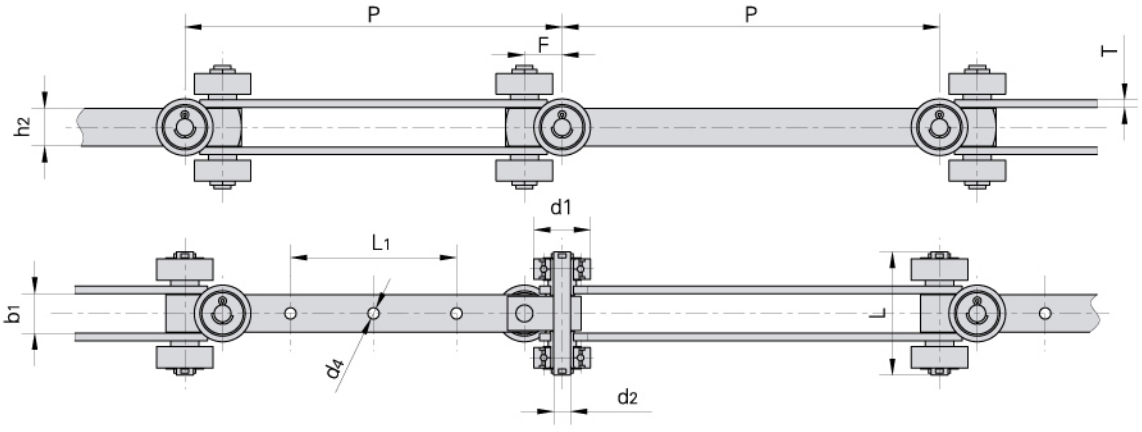

Donghua Chain No. *Donghua Ketten Nr.*	Pitch *Teilung*	Roller diameter *Rollen-durch-messer*	Width between inner plates *Innere Breite*	Pin diameter *Bolzen-durch-messer*	Pin lenght *Bolzen-länge*	plate dimension *Laschen-abmessungen*		Attachment dimension *Befestigungs-laschen-abmessungen*			Ultimate tensile strength *Min. Bruchkraft*
	P	d_1 max	b_1 min	d_2 max	L max	h_2 max	T max	L1	d_4	F	Q min
	mm	mm	mm	mm	mm	mm	mm	mm	mm	mm	kN/LB
SJ400–40	200.0	30.0	20.0	9.0	65.0	20.0	3.0	88.0	6.44	20.0	15.0/3374
SJ400–60	200.0	35.0	21.0	10.0	64.5	20.0	4.0	88.0	6.50	20.0	60.0/13497
SJ400–100	200.0	40.0	26.0	14.0	75.0	30.0	4.0	88.0	10.00	25.0	100.0/22495
SJ405S–60	203.2	47.0	30.0	14.0	95.0	30.0	4.0	76.2	8.40	16.5	50.0/11247

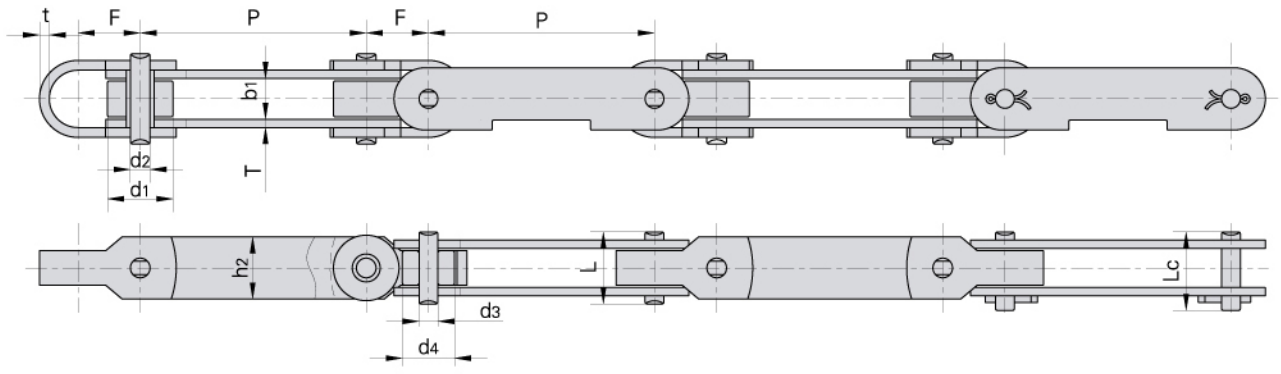

Donghua Chain No. *Donghua Ketten Nr.*	Pitch *Teilung*	Roller diameter *Rollen-durch-messer*		Width between inner plates *Innere Breite*	Pin diameter *Bolzen-durch-messer*		Pin lenght *Bolzen-länge*		plate dimension *Laschen-abmessungen*		Attachment dimension *Befestigungs-laschen-abmessungen*		Ultimate tensile strength *Min. Bruchkraft*
	P	d_1 max	d_4 max	b_1 min	d_2	d_3	L max	Lc max	h_2 max	T max	F	t	Q min
	mm	mm	mm	mm	mm	mm	mm	mm	mm	mm	mm	mm	kN/LB
P69F2	69.0	20.0	15.9	8.6	6.0	5.72	22.0	24.0	19.0	2.5	19.0	3.0	20.0/4545

Conveyor chains for hoisting
Hebezeugketten

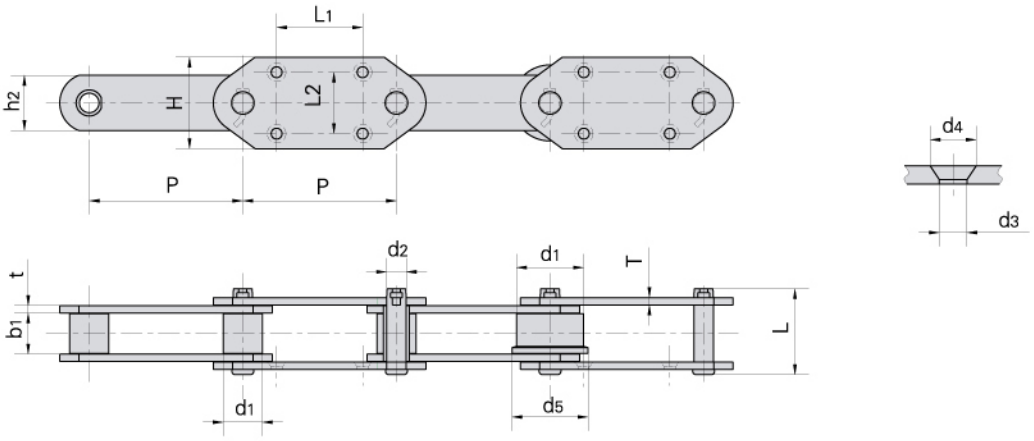

Donghua Chain No. *Donghua Ketten Nr.*	P	H	L_1	L_2	d_3	d_4
	mm	mm	mm	mm	mm	mm
P95	95.0	95.0	50.0	70.0	12.0	21.0
RF10150RF1	150.0	100.0	75.0	70.0	11.0	20.0
P152F41	152.4	110.0	75.0	70.0	14.5	25.0
RF17200MF1–G–4	200.0	125.0	100.0	80.0	18.0	33.0
RF17200MF2–G–4	200.0	120.0	100.0	80.0	15.0	26.0
P250F6	250.0	150.0	140.0	100.0	17.7	30.0
P300F1	300.0	180.0	170.0	120.0	22.0	39.0



Donghua Chain No. *Donghua Ketten Nr.*	Pitch *Teilung*	Roller diameter *Rollen-durch-messer*		Width between inner plates *Innere Breite*	Pin diameter *Bolzen-durch-messer*	Pin length *Bolzen-länge*	Plate depth *Laschen-höhe*	Plate thickness *Laschen-dicke*	Ultimate tensile strength *Min. Bruchkraft*	Average tensile strength *Durchschn. Bruchkraft*	Weight per meter *Gewicht*
	P	d_1 max	d_5	b_1 min	d_2 max	L max	h_2 max	t/T max	Q min	Q_0	q
	mm	mm	mm	mm	mm	mm	mm	mm	kN/LB	kN	kg/m
P95	95.0	50.8	58.0	30.0	13.5	70.0	38.0	6.0	75.0/16871	82.5	9.93
RF10150RF1	150.0	50.0	60.0	30.0	14.5	69.0	38.1	8.0/6.3	200.0/44992	220.0	8.64
P152F41	152.4	38.1	–	36.0	15.5	90.0	50.0	8.0	150.0/33743	165.0	11.91
RF17200MF1–G–4	200.0	44.5	–	51.4	19.1	120.0	60.0	10.0	245.0/55114	269.5	17.60
RF17200MF2–G–4	200.0	44.5	–	51.4	19.1	109.5	50.8	9.5	213.0/47916	243.0	15.10
P250F6	250.0	63.5	–	67.0	31.8	146.0	90.0	12.0	450.0/101230	495.0	31.70
P300F1	300.0	70.0	–	75.0	35.0	174.0	100.0	16.0	1065.0/239580	1118.0	47.47

Welded conveyor chains
Geschweißte Förderketten

P160F7

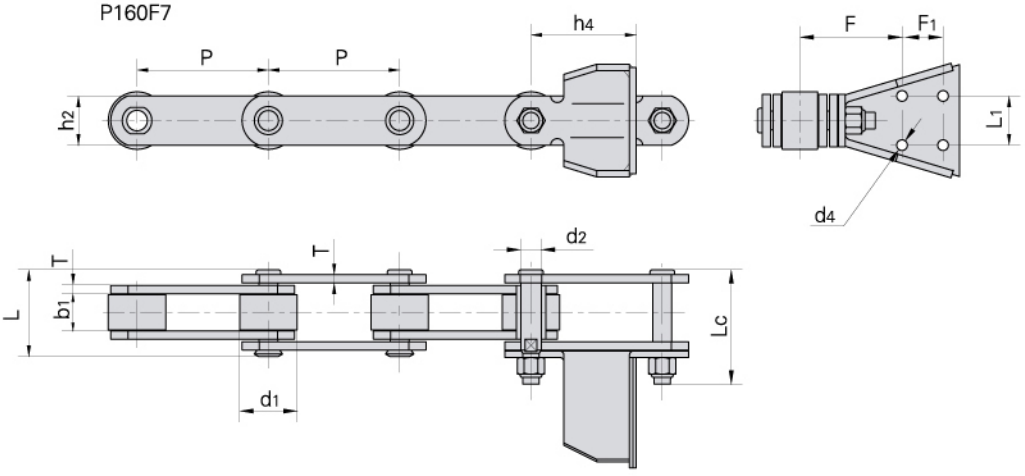

P125F6

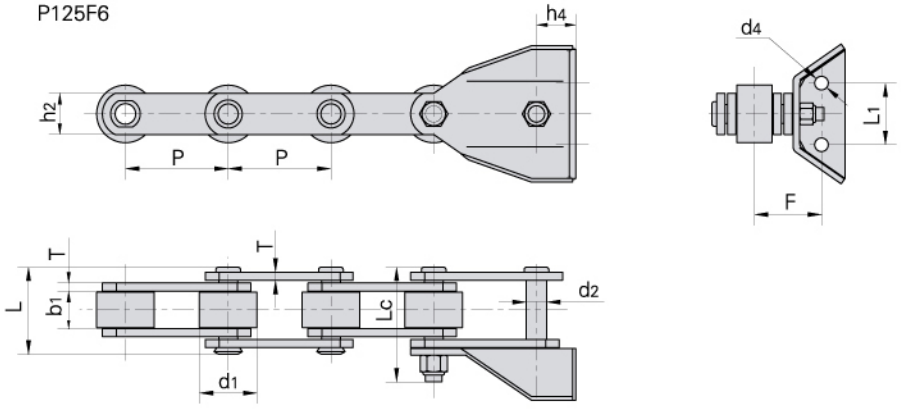

Donghua Chain No. *Donghua Ketten Nr.*	P	L_1	F	d_4	h_4	F_1
	mm	mm	mm	mm	mm	mm
P125F6	125.0	75.0	77.5	16.5	44.0	
P160F7	160.0	60.0	119.5	13.0	130.0	50.0

Donghua Chain No. *Donghua Ketten Nr.*	Pitch *Teilung*	Roller diameter *Rollen-durch-messer*	Width between inner plates *Innere Breite*	Pin diameter *Bolzen-durch-messer*	Pin length *Bolzen-länge*		Plate depth *Laschen-höhe*	Plate thickness *Laschen-dicke*	Ultimate tensile strength *Min. Bruchkraft*
	P	d_1 max	b_1 min	d_2 max	L max	Lc max	h_2 max	T max	Q min
	mm	mm	mm	mm	mm	mm	mm	mm	kN/LB
P125F6	125.0	70.0	45.0	20.0	90.0	122.0	50.0	8.0	250/56818
P160F7	160.0	70.0	45.0	25.0	99.0	136.0	60.0	10.0	400/90908

Welded conveyor chains
Geschweißte Förderketten

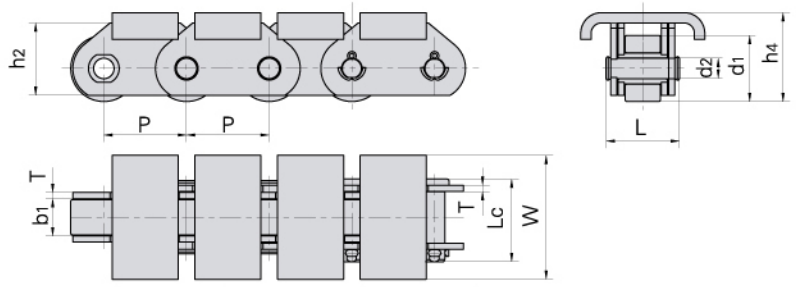

Donghua Chain No. *Donghua Ketten Nr.*	Pitch *Teilung*	Roller diameter *Rollen-durch-messer*	Width between inner plates *Innere Breite*	Pin diameter *Bolzen-durch-messer*	Pin length *Bolzen-länge*		Plate depth *Laschen-höhe*	Plate thickness *Laschen-dicke*	Attachment dimension *Befestigungs-laschen-abmessungen*		Ultimate tensile strength *Min. Bruchkraft*	Weight per meter *Gewicht*
	P	d_1 max	b_1 min	d max	L max	Lc max	h_2 max	T max	W	h_4	Q min	q
	mm	mm	mm	mm	mm	mm	mm	mm	mm	mm	kN/LB	kg/m
P40F3	40.0	32.0	18.0	10.00	36.1	40.2	35.0	3.0	60.0	43.00	40.0/9091	7.27
P40F5	40.0	32.0	18.0	10.00	36.1	40.2	35.0	3.0	59.5	42.00	40.0/9091	7.16
P63F6	63.0	48.0	25.0	14.00	52.0	57.0	45.0	5.0	130.0	56.50	63.0/14172.3	16.22
P63F9	63.0	48.0	25.0	14.00	52.0	57.0	45.0	5.0	80.0	56.50	63.0/14172.3	13.66
P76.2F19	76.2	38.1	27.5	11.10	59.1	63.5	35.0	6.4	63.5	50.05	150/33721	11.35
P76.2F27	76.2	47.6	19.0	19.05	69.5	77.0	50.0	10.0	82.0	78.80	90/20232	15.47

Roller chains for textile machinery
Rollenketten für Textilmaschinen

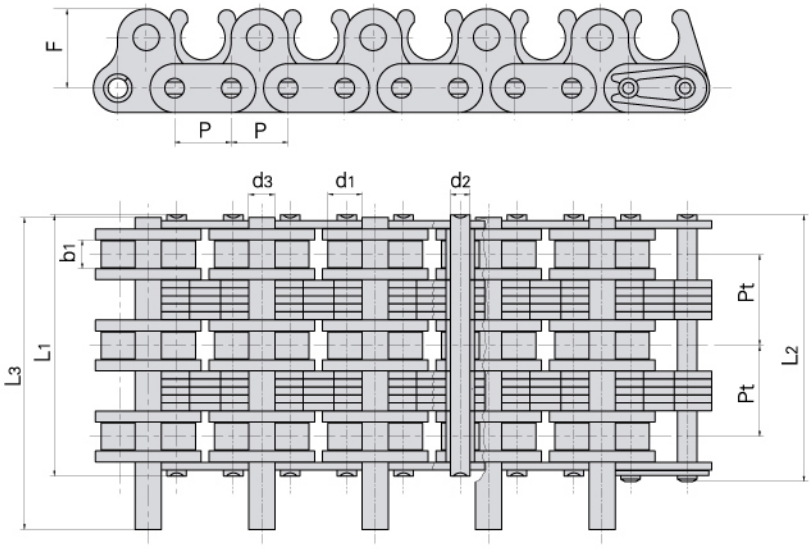

Donghua Chain No. *Donghua Ketten Nr.*	Pitch *Teilung*	Roller diameter *Rollen-durch-messer*	Width between inner plates *Innere Breite*	Pin diameter *Bolzen-durch-messer*		Pin length *Bolzen-länge*			Attachment dimension *Befestigungs-laschen-abmessungen*	Transverse pitch *Mitten-abstand*	Ultimate tensile strength *Min. Bruchkraft*	Weight per meter *Gewicht*
	P	d_1 max	b_1 min	d_2 max	d_3 max	L_1 max	L_2 max	L_3 max	F	Pt	Q min	q
	mm	mm	mm	mm	mm	mm	mm	mm	mm	mm	kN/LB	kg/m
06BF20	9.525	6.35	4.6	3.28	4.45	43.75	44.85	52.4	13.0	15.0	24.9/5682	2.77

Roller chains for folio transport (Gripper)
Rollenketten für den Folientransport

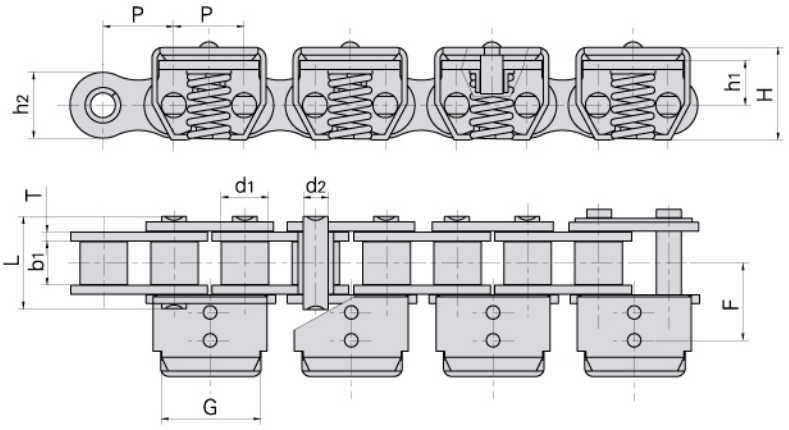

Donghua Chain No. *Donghua Ketten Nr.*	Pitch *Teilung*	Roller diameter *Rollen-durch-messer*	Width between inner plates *Innere Breite*	Pin diameter *Bolzen-durch-messer*	Pin length *Bolzen-länge*	Attachment dimension *Befestigungs-laschen-abmessungen*					Ultimate tensile strength *Min. Bruchkraft*	Weight per meter *Gewicht*
	P	d_1 max	b_1 min	d_2 max	L max	h_2 max	F	h_1	H	T	Q min	q
	mm	mm	mm	mm	mm	mm	mm	mm	mm	mm	kN/LB	kg/m
08BSSF32	12.7	8.51	7.75	4.45	16.7	11.8	13.8	8.0	16.5	1.6	12.0/2727	1.14

Support chains
Rollenketten für die Papierindustrie

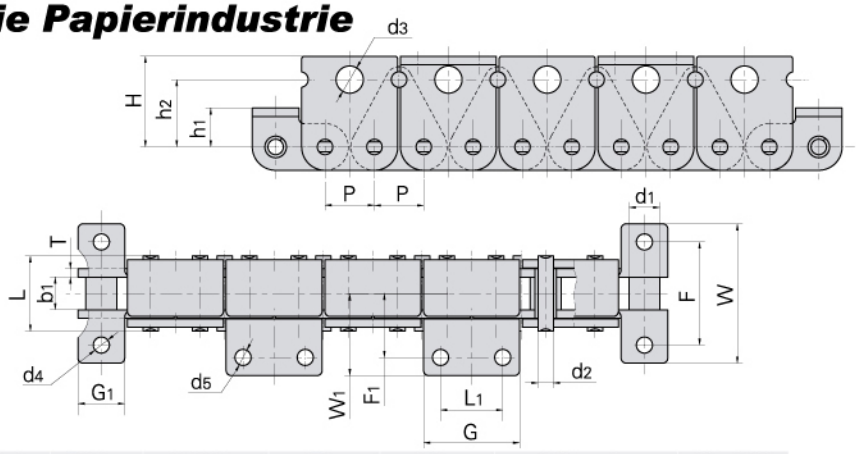

Donghua Chain No. *Donghua Ketten Nr.*	Pitch *Teilung*	Roller diameter *Rollen-durch-messer*	Width between inner plates *Innere Breite*	Pin diameter *Bolzen-durch-messer*	Pin length *Bolzen-länge*	Ultimate tensile strength *Min. Bruchkraft*	Weight per meter *Gewicht*
	P	d_1 max	b_1 min	d_2 max	L max	Q min	q
	mm	mm	mm	mm	mm	KN/LB	kg/m
12AH–TB35	19.05	11.91	12.57	5.94	29.2	31.8/7227	4.35

Donghua Chain No. *Donghua Ketten Nr.*	H	h_2	d_3	F	W	G_1	h_1	d_4	T	F_1	W_1	L_1	G	d_5
	mm	mm	mm	mm	mm	mm	mm	mm	mm	mm	mm	mm	mm	mm
12AH–TB35	35.0	26.0	10.5	40.0	54.0	18.0	15.0	6.2	3.25	24.8	31.8	24.0	37.0	6.2

78PF1 conveyor chains
78PF1 Förderketten



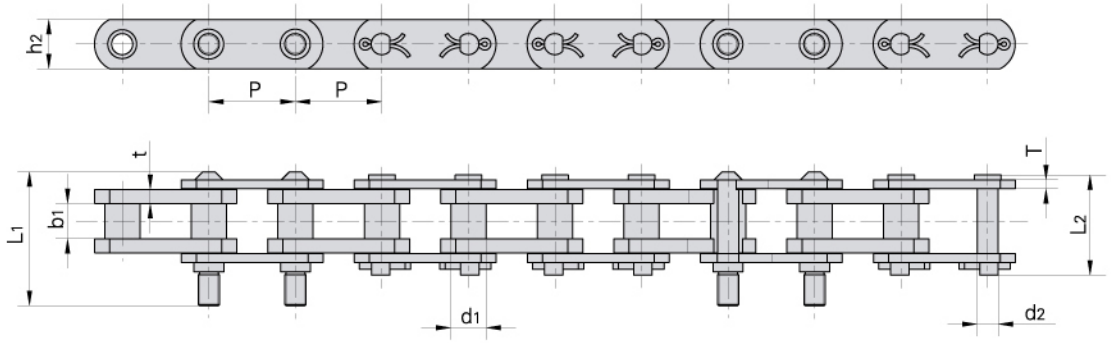

Donghua Chain No. *Donghua Ketten Nr.*	Pitch *Teilung*	Bush diameter *Buchsen-durch-messer*	Width between inner plates *Innere Breite*	Pin diameter *Bolzen-durch-messer*	Pin length *Bolzen-länge*		Plate depth *Laschen-höhe*	Plate thickness *Laschen-dicke*	Ultimate tensile strength *Min. Bruchkraft*	Average tensile strength *Durchschn. Bruchkraft*	Weight per meter *Gewicht*
	P	d_1 max	b_1 min	d_2 max	L_1 max	L_2 max	h_2 max	t/T max	Q min	Q_0 min	q
	mm	mm	mm	mm	mm	mm	mm	mm	kN/LB	kN	kg/m
78PF1	78.1	31.75	31.75	19.05	122.0	90.5	44.5	12.7/8.0	140.0/31818	166.88	14.22

Conveyor chains for paper mill
Förderketten für die Papierindustrie



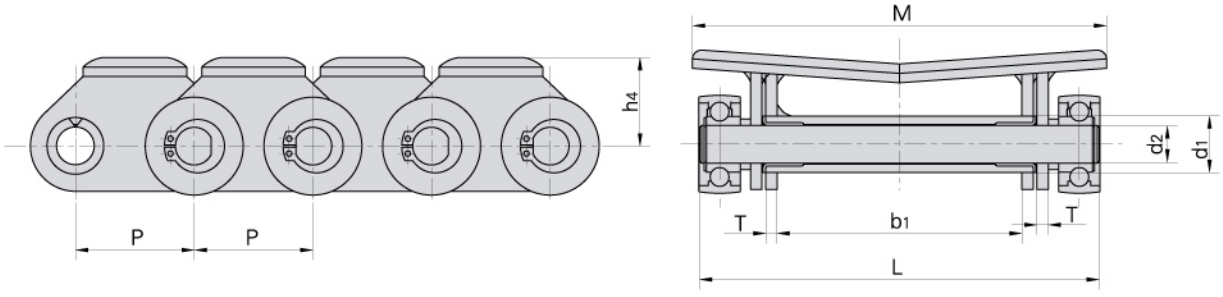

Donghua Chain No. *Donghua Ketten Nr.*	Pitch *Teilung*	Bush diameter *Buchsen-durch-messer*	Width between inner plates *Innere Breite*	Pin diameter *Bolzen-durch-messer*	Pin length *Bolzen-länge*	Plate thickness *Laschen-dicke*	Attachment dimension *Befestigungs-laschen-abmessungen*		Ultimate tensile strength *Min. Bruchkraft*	Average tensile strength *Durchschn. Bruchkraft*
	P	d_1 max	b_1 min	d_2 max	L max	T max	M	h_4	Q min	Q_0 min
	mm	mm	mm	mm	mm	mm	mm	mm	kN/LB	kN
63PF2	63.0	30.0	130.0	20.0	213.2	6.0	220.0	50.0	160.0/36364	176.0

Conveyor chains for paper mill
Förderketten für die Papierindustrie

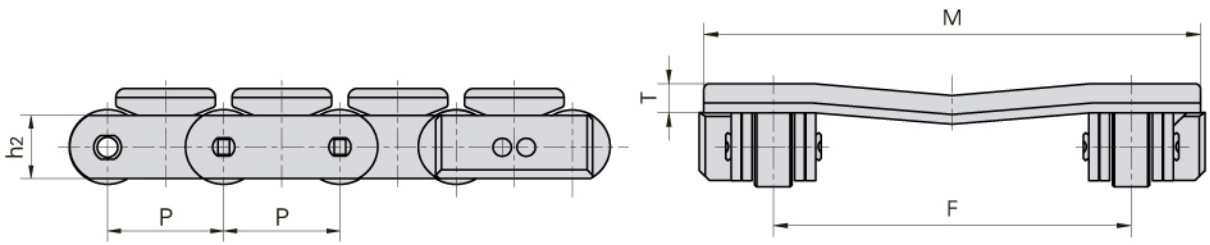

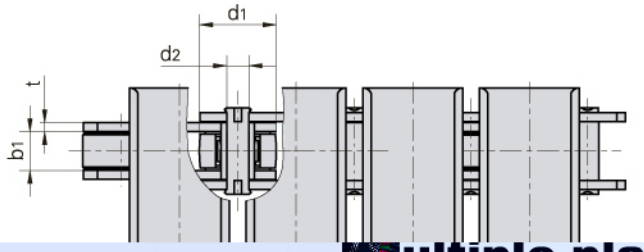

Multiple plate bearing pin chains
Gallketten

bination

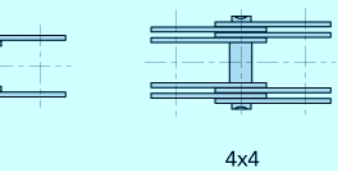

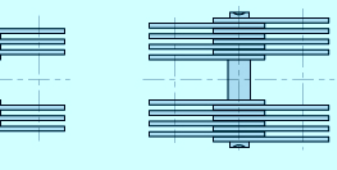

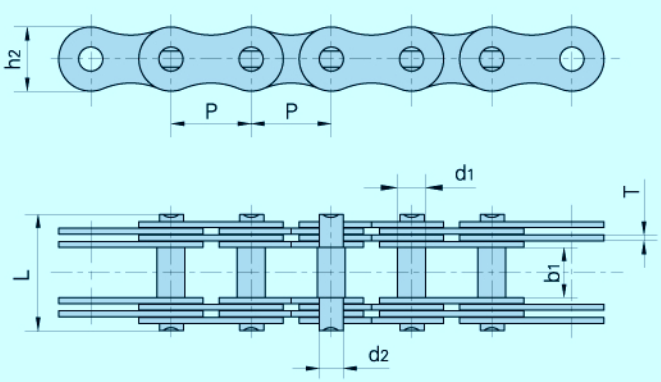

Plate lacing
Laschenkom

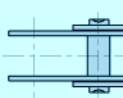

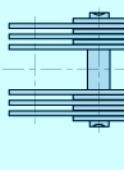

Donhua Chain No.	Pitch *Teilung*	Width between inner plates *Innere Breite*	Plate lacing *Laschen-kombination*	Pin diameter *Bolzen-durch-*	Pin length *Bolzen-länge*	Plate depth *Laschen-höhe*	Plate thickness *Laschen-dicke*	Ultimate tensile strength *Min. Bruchkraft*	Weight per meter *Gewicht*
[illegible]	19.0	250.0	120.0						

Conveyor chains for paper mill
Förderketten für die Papierindustrie

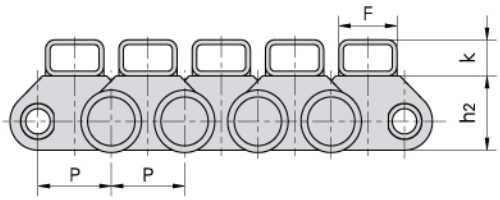

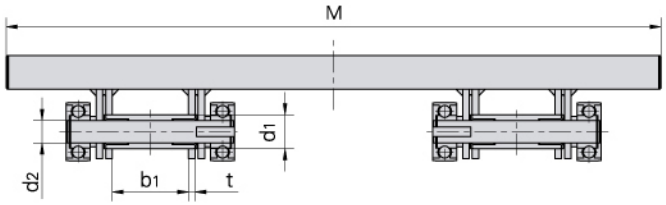

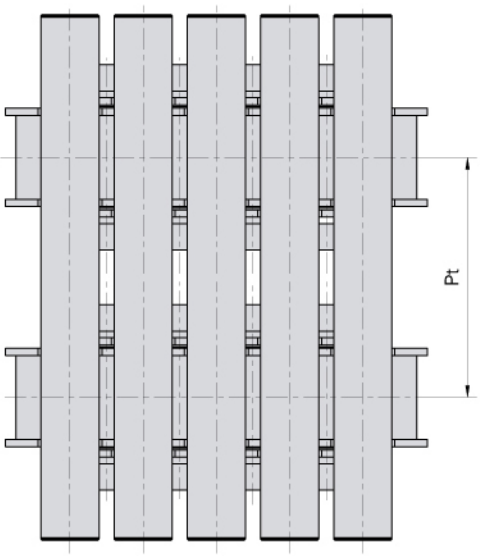



	Pitch	Width between	Pin diameter	Bush	Plate	Plate	Attachment	Ultimate

CHAIN GROUP
DONGHUA
DONGHUA
Rollerless lift chains
Buchsenketten für Hubgeräte

Conveyor chains for metal decorating system
Rollenketten für Lackier- und Trocknungsanlagen

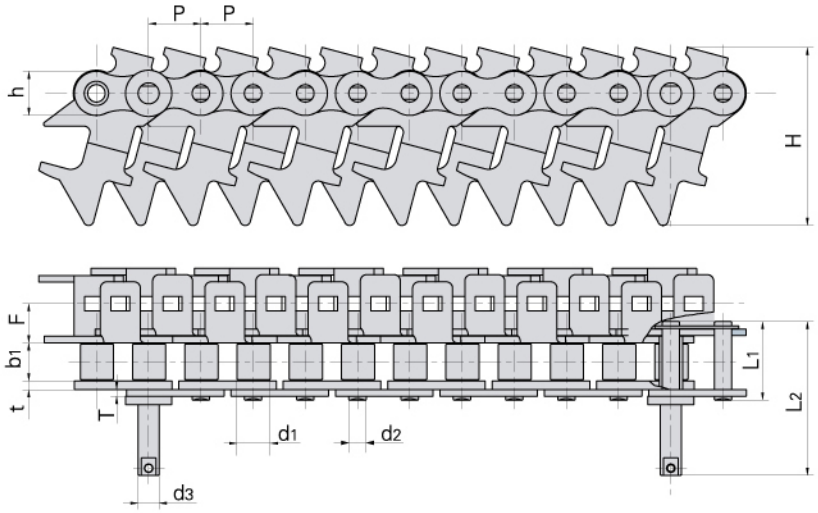

Donghua Chain No. *Donghua Ketten Nr.*	Pitch *Teilung*	Roller diameter *Rollen-durch-messer*	Width between inner plates *Innere Breite*	Pin diameter *Bolzen-durch-messer*		Pin length *Bolzen-länge*		Plate dimension *Laschen-abmessungen*			Assembly dimension *Abmessungen Anbauteile*		Ultimate tensile strength *Min. Bruchkraft*
	P	d_1 max	b_1 min	d_2 max	d_3 max	L_1 max	L_2 max	h	T	t	H	F	Q min
	mm	mm	mm	mm	mm	mm	mm	mm	mm	mm	mm	mm	kN/LB
16BF12	25.4	15.88	18.0	8.28	10.0	37.4	73.2	21.0	3.1	4.15	85.0	18.5	40.0/9090

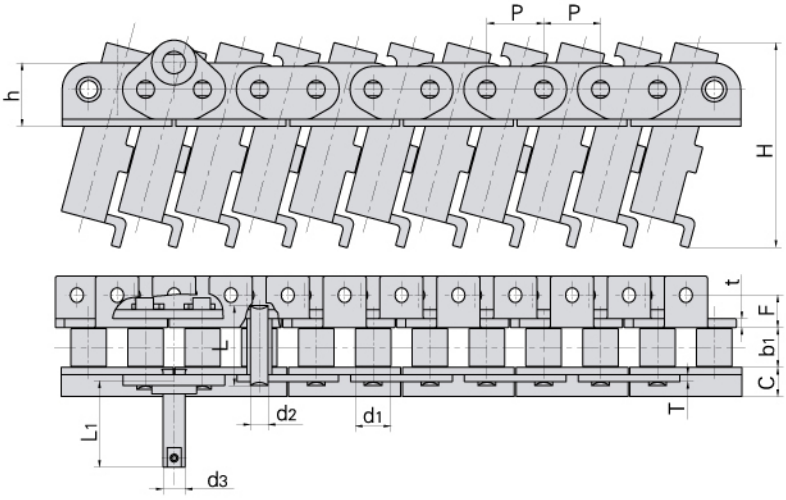

Donghua Chain No. *Donghua Ketten Nr.*	Pitch *Teilung*	Roller diameter *Rollen-durch-messer*	Width between inner plates *Innere Breite*	Pin diameter *Bolzen-durch-messer*		Pin length *Bolzen-länge*		Plate dimension *Laschen-abmessungen*			Assembly dimension *Abmessungen Anbauteile*			Ultimate tensile strength *Min. Bruchkraft*
	P	d_1 max	b_1 min	d_2 max	d_3 max	L	L_1	h	T	t	H	F	C	Q min
	mm	mm	mm	mm	mm	mm	mm	mm	mm	mm	mm	mm	mm	kN/LB
16AF18	25.4	15.88	17.00	7.92	10.0	36.2	48.6	28.3	3.25	4.0	92.0	14.7	13.0	40.0/9090

Conveyor chains for metal decorating system
Rollenketten für Lackier- und Trocknungsanlagen

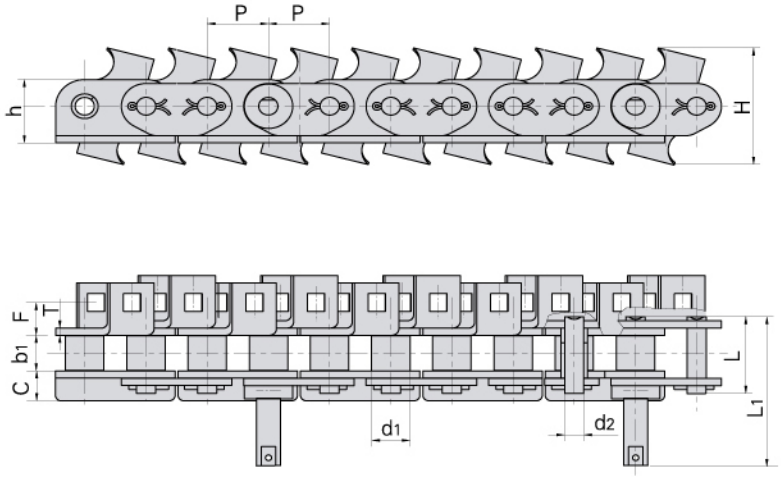

Donghua Chain No. *Donghua Ketten Nr.*	Pitch *Teilung*	Roller diameter *Rollen-durch-messer*	Width between inner plates *Innere Breite*	Pin diameter *Bolzen-durch-messer*	Pin length *Bolzen-länge*		Plate dimension *Laschen-abmessungen*		Assembly dimension *Abmessungen Anbauteile*			Ultimate tensile strength *Min. Bruchkraft*
	P	d_1 max	b_1 min	d_2 max	L	L_1	h	T	H	F	C	Q min
	mm	mm	mm	mm	mm	mm	mm	mm	mm	mm	mm	kN/LB
16AF7	25.4	15.88	15.75	7.92	36.5	67.9	28.3	3.25	59.1	13.5	13	40.0/9090

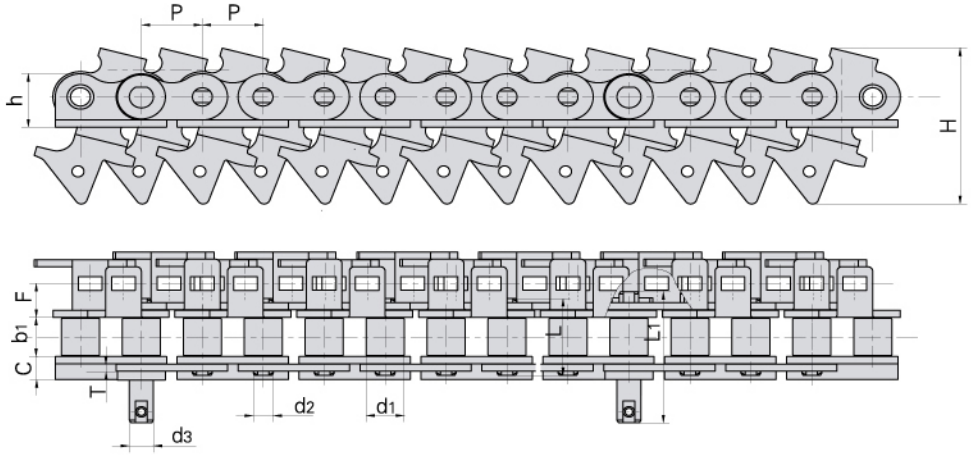

Donghua Chain No. *Donghua Ketten Nr.*	*Teilung* Pitch	*Rollen-durch-messer* Roller diameter	*Innere Breite* Width between inner plates	*Bolzen-durch-messer* Pin diameter		*Bolzen-länge* Pin length		*Laschen-abmessungen* Plate dimension		*Abmessungen Anbauteile* Assembly dimension			*Min. Bruchkraft* Ultimate tensile strength
	P	d_1 max	b_1 min	d_2 max	d_3 max	L	L_1	h	T	H	F	C	Q min
	mm	mm	mm	mm	mm	mm	mm	mm	mm	mm	mm	mm	kN
16AF27	25.4	15.88	15.75	7.92	10.0	32.7	75.2	28.3	3.25	71.0	14.6	13.0	40.0

To top chain - curved movement
Plattenbandketten

A type
A-Typ

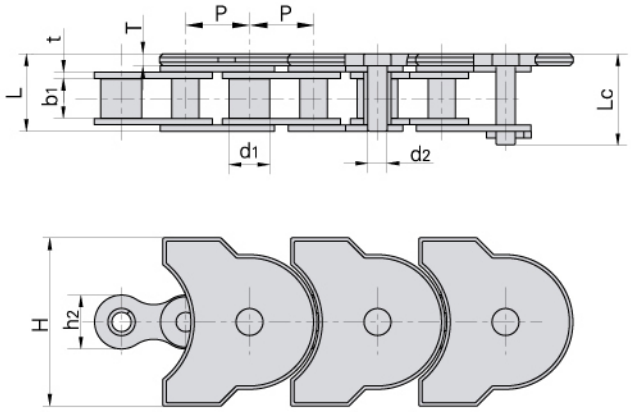

B type
B-Typ

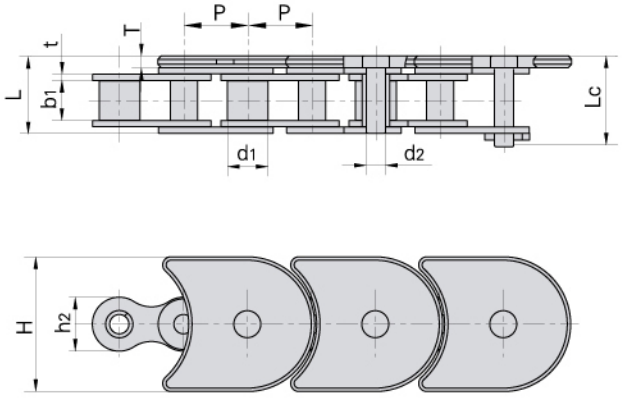

Donghua Chain No. *Donghua Ketten Nr.*	Pitch *Teilung*	Roller diameter *Rollen-durch-messer*	Width between inner plates *Innere Breite*	Pin diameter *Bolzen-durch-messer*	Pin length *Bolzen-länge*		Plate dimension *Laschen-abmessungen*		Attachment dimension *Befestigungs-laschen-abmessungen*		Ultimate tensile strength *Min. Bruchkraft*	Weight per meter *Gewicht*	Type *Typ*
	P	d_1 max	b_1 min	d_2 max	L max	Lc max	h_2 max	t	H	T	Q min	q	
	mm	mm	mm	mm	mm	mm	mm	mm	mm	mm	kN/LB	kg/m	
TOS50	19.05	12.07	11.68	5.72	23.3	27.28	16.0	1.85	50	3.50	29.0/6591	2.35	A
TOS50F1	25.40	12.07	11.68	5.72	22.8	27.28	21.0	1.85	50	3.50	29.0/6591	2.95	B
TOS80	38.10	15.88	15.75	7.92	32.4	–	27.3	3.25	82.6	3.25	55.6/12636	4.91	B

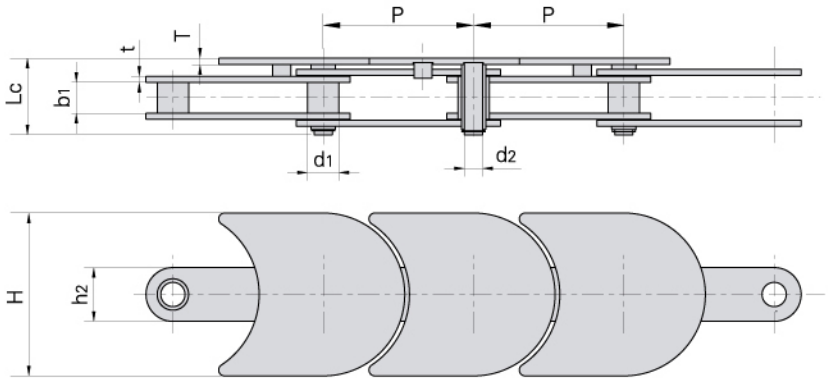

Donghua Chain No. *Donghua Ketten Nr.*	Pitch *Teilung*	Bush diameter *Buchsen-durch-messer*	Width between inner plates *Innere Breite*	Pin diameter *Bolzen-durch-messer*	Pin length *Bolzen-länge*	Plate dimension *Laschen-abmessungen*		Attachment dimension *Befestigungs-laschen-abmessungen*		Ultimate tensile strength *Min. Bruchkraft*	Weight per meter *Gewicht*
	P	d_1 max	b_1 min	d_2 max	Lc max	h_2 max	t	H	T	Q min	q
	mm	mm	mm	mm	mm	mm	mm	mm	mm	kN/LB	kg/m
76HP	76.2	15.92	15.7	9.2	37.5	27.3	3.0	82.6	3.0	45.0/10227	2.76

To top chain - curved movement
Plattenbandketten

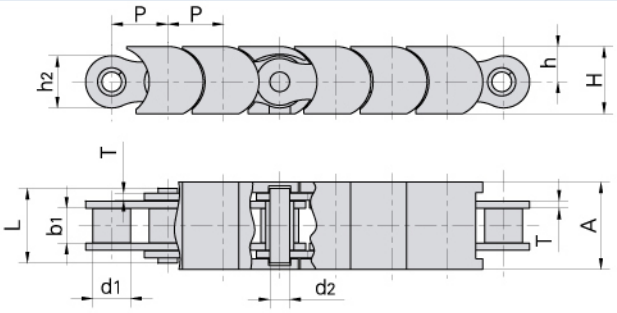

Donghua Chain No. / Donghua Ketten Nr.	Pitch / Teilung	Roller diameter / Rollen-durchmesser	Width between inner plates / Innere Breite	Pin diameter / Bolzen-durchmesser	Pin length / Bolzen-länge	Plate dimension / Laschen-abmessungen		Plastic attachment dimension / Plastik-befestigungs-laschen-abmessungen			Ultimate tensile strength / Min. Bruchkraft
	P	d_1 max	b_1 min	d_2 max	L max	h_2 max	T max	A	h	H	Q min
	mm	mm	mm	mm	mm	mm	mm	mm	mm	mm	kN/LB
08B–TP	12.700	8.51	7.75	4.45	16.7	11.8	1.60	19.8	8.0	15.2	18/4091
10B–TP	15.875	10.16	9.65	5.08	19.5	14.7	1.70	24.8	9.5	17.5	22.4/5091
12B–TP	19.050	12.07	11.68	5.72	22.5	16.0	1.85	29.8	11.0	19.8	29/6591

Double flex chains
Double flex Ketten

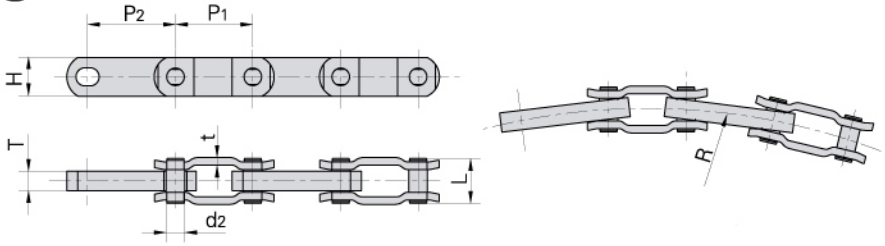

Donghua Chain No. / Donghua Ketten Nr.	Pitch / Teilung	Pitch / Teilung	Thickness of inner plates / Innen-laschen-dicke	Pin diameter / Bolzen-durchmesser	Pin length / Bolzen-länge	Plate dimension / Laschen-abmessungen		Side bow radius / Seiten-bogen-radius	Ultimate tensile strength / Min. Bruchkraft	Average tensile strength / Durchschn. Bruchkraft	Weight per meter / Gewicht
	P_1	P_2	T	d_2 max	L max	H max	t	R min	Q min	Q_0	q
	mm	mm	mm	mm	mm	mm	mm	mm	kN/LB	kN	kg/m
3500	63.5	76.2	15.9	14.27	37.0	32.0	6.3	508.0	160.0/36363	196.0	5.14

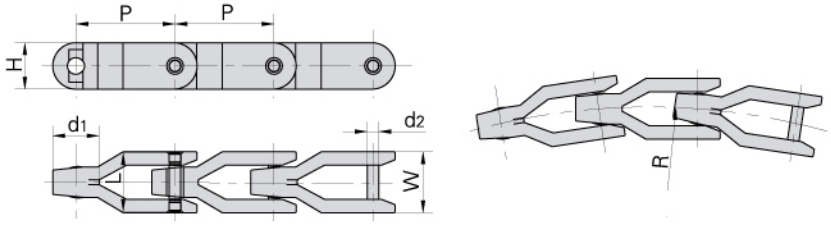

Donghua Chain No. / Donghua Ketten Nr.	Pitch / Teilung	Pin diameter / Bolzen-durchmesser	Pin length / Bolzen-länge	Plate dimension / Laschen-abmessungen			Side bow radius / Seitenbogen-radius	Ultimate tensile strength / Min. Bruchkraft	Weight per meter / Gewicht
	P	d_2 max	L	H max	W max	d_1	R min	Q min	q
	mm	mm	mm	mm	mm	mm	mm	kN/LB	kg/m
CC1400	81.3	9.5	48.0	38.5	50.0	38.0	500	30.0/6818	1.99

HOLLOW PIN CHAINS
KETTEN MIT HOHLBOLZEN



Hollow pin chains
Ketten mit Hohlbolzen



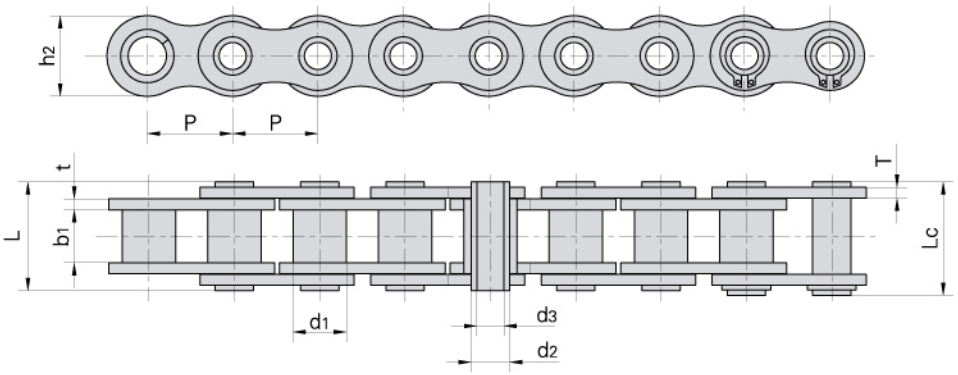

Donghua Chain No. *Donghua Ketten Nr.*	Pitch *Teilung*	Bush diameter *Buchsen-durch-messer*	Width between inner plates *Innere Breite*	Pin diameter *Bolzen-durch-messer*		Pin length *Bolzen-länge*		Inner plate depth *Innen-laschen-höhe*	Plate thickness *Laschen-dicke*	Ultimate tensile strength *Min. Bruchkraft*	Average tensile strength *Durchschn. Bruchkraft*	Weight per meter *Gewicht*
	P	d_1 max	b_1 min	d_2 max	d_3 min	L max	Lc max	h_2 max	t/T max	Q min	Q_0	q
	mm	mm	mm	mm	mm	mm	mm	mm	mm	kN/LB	kN	kg/m
08BHPF	12.700	8.51	7.75	6.55	4.50	16.4	17.6	11.80	1.6/1.3	11.1/2523	12.1	0.56
08BHPF5	12.700	8.51	7.75	6.30	4.50	16.8	18.0	12.00	1.60	9.6/2182	10.6	0.62
10BHPF3	15.875	10.16	9.65	7.02	5.13	19.5	20.5	14.70	1.70	10.0/2272	11.5	0.86
10BHPF4	15.875	10.16	9.50	7.20	5.00	19.8	21.3	14.00	2.03/1.6	12.5/2840	14.0	0.82
12BHPF2	19.050	12.07	11.68	8.09	6.00	22.7	23.9	16.10	1.85	14.0/3180	16.0	0.82
12BHPF3	19.050	12.07	11.70	8.22	5.75	23.6	24.9	16.20	2.42/1.85	16.0/3636	18.0	1.14
16BHPF3	25.400	15.88	17.02	11.50	8.20	35.3	37.0	23.20	4.0/3.1	49.0/11136	52.2	2.26
16BHPF4	25.400	11.70	13.50	8.00	4.30	28.9	30.2	21.30	3.00	30.0/6818	33.0	1.81
40HP	12.700	7.95	7.85	5.63	4.00	16.5	17.6	12.00	1.50	11.0/2500	12.2	0.54
08BHPF7	12.700	8.51	9.20	6.55	4.10	17.8	19.0	11.80	1.60	11.1/2523	12.1	0.64
08BHP	12.700	8.51	7.75	6.55	4.50	16.4	17.6	11.80	1.30	11.1/2523	12.1	0.52
50HP	15.875	10.16	9.40	7.03	5.13	20.7	21.9	15.09	2.03	20.0/4545	22.6	0.91
50HPF4	15.875	10.16	8.80	7.03	5.13	19.9	21.1	15.09	2.03	18.0/4180	19.2	0.89
50HP–HP	15.875	10.16	9.40	7.03	5.13	22.6	23.7	15.09	2.42	20.0/4545	22.6	1.02
60HP	19.050	11.91	12.70	8.31	6.00	25.8	26.8	18.00	2.42	24.0/5455	26.9	1.29
60HPF1	19.050	11.91	12.70	8.31	5.01	25.5	26.8	18.00	2.42	28.0/6364	30.9	1.37
80HP	25.400	15.88	15.75	11.40	8.05	32.5	33.8	24.00	3.25	50.0/11364	52.0	2.26
80HPF1	25.400	11.70	13.50	7.80	4.00	27.0	28.4	21.50	2.42	27.44/6236	29.3	1.50
80HPF2	25.400	15.88	15.75	11.40	8.40	32.5	33.8	24.00	3.25	45.0/10227	48.0	2.23
80H–HP	25.400	15.88	15.75	11.40	8.05	35.7	37.0	24.00	4.00	50.0/11364	52.0	2.63
80HPF3	25.400	15.88	15.88	11.40	7.96	32.4	33.8	23.24	3.25	50.0/11364	52.0	2.26
80HPF4	25.400	11.70	13.50	7.80	4.10	29.0	30.5	21.50	3.00	40.0/9091	43.2	1.77
HB41.75F5	41.750	17.11	19.90	14.11	10.30	39.0	40.4	25.26	4.00	49.0/11136	53.9	2.11
A2080HP	50.800	15.88	15.75	11.40	8.05	32.4	33.8	24.00	3.25	42.3/9615	46.1	1.60

Hollow pin chains
Ketten mit Hohlbolzen

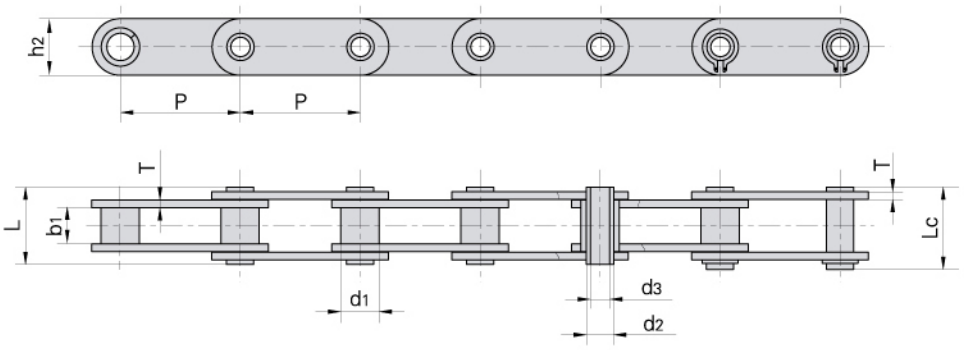

Donghua Chain No. *Donghua Ketten Nr.*	Pitch *Teilung*	Bush diameter *Buchsen-durch-messer*	Width between inner plates *Innere Breite*	Pin diameter *Bolzen-durch-messer*		Pin length *Bolzen-länge*		Inner plate depth *Innen-laschen-höhe*	Plate thickness *Laschen-dicke*	Ultimate tensile strength *Min. Bruchkraft*	Average tensile strength *Durchschn. Bruchkraft*	Weight per meter *Gewicht*
	P	d_1 max	b_1 min	d_2 max	d_3 min	L max	Lc max	h_2 max	T max	Q min	Q_0	q
	mm	mm	mm	mm	mm	mm	mm	mm	mm	kN/LB	kN	kg/m
C2040HP	25.400	7.95	7.85	5.63	4.00	16.5	17.6	12.00	1.50	11.0/2500	12.6	0.46
C2040HPF1	25.400	7.95	7.85	5.63	M4	16.5	17.6	12.00	1.50	9.0/2045	9.9	0.44
C2050HP	31.750	10.16	9.40	7.22	5.12	20.5	21.8	15.00	2.03	20.4/4636	22.8	0.76
C2060HP	38.100	11.91	12.70	8.31	6.00	25.8	26.8	17.00	2.42	24.0/5455	27.1	1.02
HP40F1	40.000	18.00	22.00	12.00	8.00	47.5	48.2	35.00	5.00	57.0/13049	63.8	5.38
HP40F2	40.000	18.00	22.00	12.00	8.20	47.5	48.2	35.00	5.00	57.0/13049	63.0	5.37
C2080HP	50.800	15.88	15.75	11.40	8.05	32.5	33.8	24.00	3.25	50.0/11364	52.0	1.81
HP50F1	50.000	26.00	14.50	20.00	14.70	35.3	36.2	40.00	3.10	30.0/6818	33.6	3.98
C40HP	12.700	7.95	7.85	5.63	4.00	16.5	17.6	12.00	1.50	11.0/2500	12.2	0.64
C50HP	15.875	10.16	9.40	7.03	5.13	20.7	21.9	15.09	2.03	20.0/4545	22.6	1.05
C60HP	19.050	11.91	12.70	8.31	6.00	25.8	26.8	18.00	2.42	24.0/5455	26.9	1.52
C80HP	25.400	15.88	15.75	11.40	8.05	32.5	33.8	24.00	3.25	50.0/11364	52.0	2.63
C08BHP	12.700	8.51	7.75	6.55	4.50	16.4	17.6	11.80	1.6/1.3	11.0/2500	11.5	0.62
HP12.5	12.500	8.51	8.20	6.65	4.50	16.4	17.6	11.60	1.5/1.3	8.0/1819	8.8	0.61
HP50F7	50.000	18.00	15.00	14.00	10.20	36.0	37.5	26.00	4.00	40/9091	43.2	2.56
HP50F10	50.000	18.00	22.00	12.10	8.30	39.5	40.6	30.00	3.00	45/10227	48.0	2.73
HB55	55.000	18.00	22.00	14.00	10.00	43.4	44.5	30.00	4.00	50/11364	52.0	3.31
HB55F1	55.000	24.00	24.00	17.00	12.00	52.0	53.5	40.00	5.00	90/20455	100.0	6.34
HB38.1F8	38.100	10.16	9.65	7.10	5.40	20.4		16.00	2.03	13/2954	14.3	0.67
C2060H–HP	38.100	11.91	12.70	6.00	8.31	29.2	30.2	17.0	3.25	24/5455	27.1	1.29

Hollow pin chains
Ketten mit Hohlbolzen



Type A
A-Typ

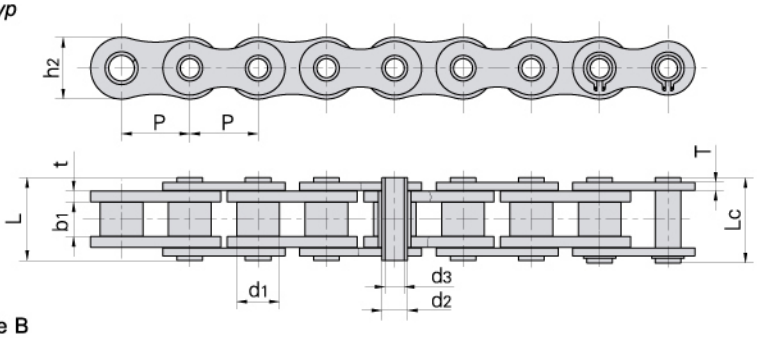

Type B
B-Typ

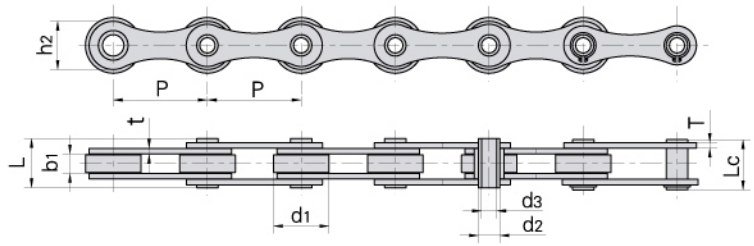

Donghua Chain No. *Donghua Ketten Nr.*	Pitch *Teilung*	Roller diameter *Rollen-durch-messer*	Width between inner plates *Innere Breite*	Pin diameter *Bolzen-durch-messer*		Pin length *Bolzen-länge*		Inner plate depth *Innen-laschen-höhe*	Plate thickness *Laschen-dicke*	Ultimate tensile strength *Min. Bruchkraft*	Average tensile strength *Durchschn. Bruchkraft*	Weight per meter *Gewicht*	Type *Typ*
	P	d_1 max	b_1 min	d_2 max	d_3 min	L max	Lc max	h_2 max	t/T max	Q min	Q_0	q	
	mm	mm	mm	mm	mm	mm	mm	mm	mm	kN/LB	kN	kg/m	
10BHB	15.875	10.16	9.65	5.94	4.04	19.30	20.60	14.70	1.70	17.00/3864	20.80	0.86	A
12BHP	19.050	12.07	11.68	6.50	4.00	21.60	22.80	15.90	1.85	23.60/5364	25.90	1.09	A
60HB	19.050	11.91	12.70	7.00	5.01	25.50	26.60	18.00	2.42	20.00/4545	22.40	1.35	A
16BHBF1	25.400	15.88	12.70	9.53	7.05	30.80	32.20	23.00	4.15/3.1	40.00/9091	45.00	2.28	A
HB25.4	25.400	20.00	8.00	8.00	5.20	19.50	20.50	17.00	2.03	25.00/5680	28.00	1.30	A
HP35	35.000	20.00	16.00	13.35	10.20	30.40	31.60	26.30	2.50	23.52/5345	26.40	2.02	A
HB35	35.000	20.00	16.00	14.00	10.2	32.00	33.50	38.10	3.00	40.00/9091	45.00	2.39	A
HB38.1	38.100	20.00	8.00	8.00	5.30	19.60	20.70	17.30	2.03	28.00/5682	28.80	0.98	B
HB38.1F1	38.100	20.00	18.00	10.50	5.10	39.00	40.30	22.00	4.00	60.00/13636	64.30	2.59	B
HB38.1F3	38.100	25.40	12.70	12.00	8.30	27.00	28.60	38.10	2.50	25.00/5682	28.80	1.51	B
HB38.1F4	38.100	20.00	12.70	8.00	5.20	26.00	27.20	17.00	2.42	24.00/5455	26.90	1.48	B
HP40F4	40.000	26.00	10.00	11.40	8.20	26.50	28.00	24.00	3.00	50.00/11364	56.70	2.20	B
HP41.75F1	41.750	17.10	20.20	11.11	8.20	35.70	39.00	21.65	3.10	26.50/6022	29.20	1.60	A
HP41.75F2	41.750	17.10	20.20	11.11	8.20	35.70	41.00	25.26	3.10	49.00/11136	54.80	2.04	A
HP41.75F3	41.750	17.00	20.50	11.00	8.30	36.00	39.50	21.40	3.00	27.00/6136	28.00	1.62	A
HP50F2	50.000	31.00	15.00	13.20	10.20	36.50	38.00	25.00	4.00	40.00/9091	43.20	3.40	B
HB50.8	50.800	30.00	10.50	11.40	8.20	27.40	28.60	26.00	3.10	50.00/11364	53.60	2.56	B

Hollow pin chains
Ketten mit Hohlbolzen



Type A
A-Typ

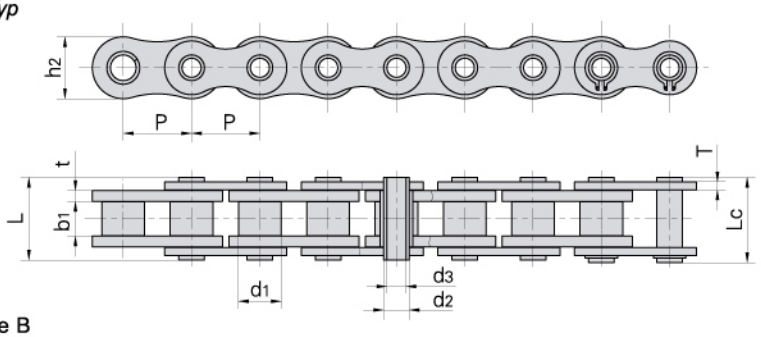

Type B
B-Typ

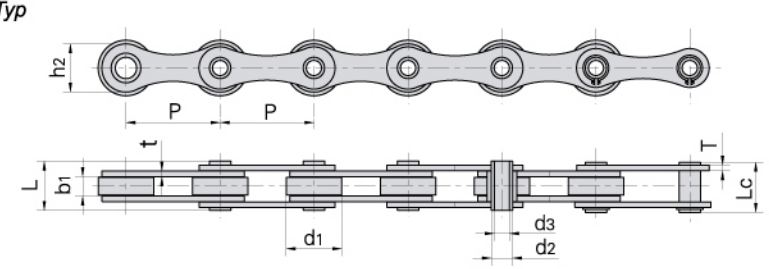

Donghua Chain No. *Donghua Ketten Nr.*	Pitch *Teilung*	Roller diameter *Rollen-durch-messer*	Width between inner plates *Innere Breite*	Pin diameter *Bolzen-durch-messer*		Pin length *Bolzen-länge*		Inner plate depth *Innen-laschen-höhe*	Plate thickness *Laschen-dicke*	Ultimate tensile strength *Min. Bruchkraft*	Average tensile strength *Durchschn. Bruchkraft*	Weight per meter *Gewicht*	Type *Typ*
	P	d1 max	b1 min	d2 max	d3 min	L max	Lc max	h2 max	t/T max	Q min	Q0	q	
	mm	mm	mm	mm	mm	mm	mm	mm	mm	kN/LB	kN	kg/m	B
HB50.8F4	50.80	30.00	10.50	13.6	8.20	27.40	28.90	26.0	3.10	42.00/9545	48.20	2.28	B
HB63	63.00	30.00	10.00	11.4	8.10	26.70	28.10	26.5	3.10	50.00/11364	53.60	2.07	B
HB63F1	63.00	40.00	10.00	11.4	8.10	26.70	28.10	26.5	3.10	50.00/11364	53.60	2.27	B
HB63F2	63.00	40.00	20.00	11.4	8.10	36.70	38.10	26.5	3.10	50.00/11364	53.60	3.20	B
HB63F3	63.00	40.00	15.00	11.4	8.20	35.60	37.00	26.5	4.00	35.00/7955	38.50	3.90	B
HB63F4	63.00	30.00	20.00	11.4	8.10	36.70	38.10	26.5	3.10	50.00/11364	53.60	2.97	B
HB63F6	63.00	30.00	10.00	11.7	8.20	26.70	28.10	26.5	3.10	50.00/11364	56.70	2.08	B
HB63F7	63.00	40.00	18.00	14.0	10.20	38.00	39.50	28.0	4.00	50.00/11364	56.70	4.26	B
HB63F8	63.00	30.00	20.00	11.7	8.10	36.50	38.00	26.5	3.10	50.00/11364	56.70	2.91	B
HB100	100.00	30.00	10.50	11.4	8.20	27.40	28.60	26.0	3.10	50.00/11364	53.60	1.56	A
12AHBF2	19.05	11.91	12.70	7.0	5.10	26.50	27.60	18.0	2.42	20/4545	22.40	1.39	A
12BHPF6SLR	19.05	12.07	11.68	6.5	4.04	22.30	23.50	15.9	1.85	23.6/5364	25.96	1.12	B
HP38.1F9	38.10	22.20	12.70	11.0	8.15	26.50	27.50	18.0	2.50	22/5000	24.40	1.46	B
DH16500HP	50.00	30.00	10.50	11.4	8.20	27.40	28.60	26.0	3.10	50.00/11364	53.60	2.23	B
HB50F4	50.00	30.00	10.00	16.0	8.00	26.60	30.00	25.4	3.00	60/13635	67.20	2.03	B
HB50.8F14	50.80	30.00	10.00	16.0	8.00	26.60	30.00	25.4	3.00	60/13635	67.20	2.01	B
HB100F8	100.00	30.00	10.00	16.0	8.00	26.60	30.00	25.4	3.00	60/13635	67.20	1.37	

Hollow pin chains
Ketten mit Hohlbolzen

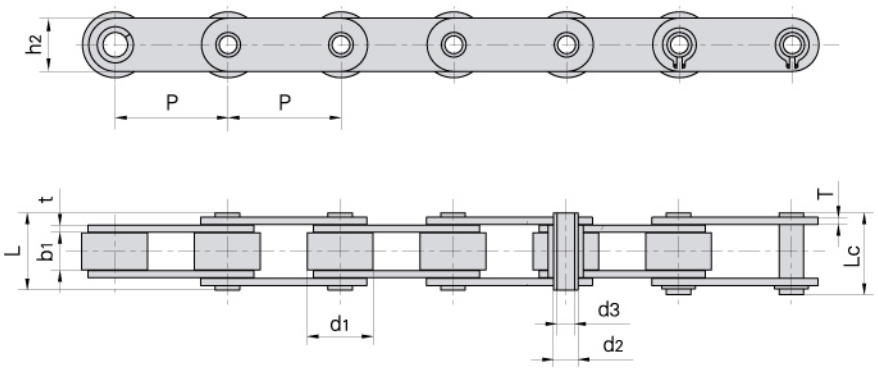

Donghua Chain No. *Donghua Ketten Nr.*	Pitch *Teilung*	Roller diameter *Rollen-durch-messer*	Width between inner plates *Innere Breite*	Pin diameter *Bolzen-durch-messer*		Pin length *Bolzen-länge*		Inner plate depth *Innen-laschen-höhe*	Plate thickness *Laschen-dicke*	Ultimate tensile strength *Min. Bruchkraft*	Average tensile strength *Durchschn. Bruchkraft*	Weight per meter *Gewicht*
	P	d_1 max	b_1 min	d_2 max	d_3 min	L max	Lc max	h_2 max	t/T max	Q min	Q_0	q
	mm	mm	mm	mm	mm	mm	mm	mm	mm	kN/LB	kN	kg/m
C2042HP	25.40	15.88	7.85	5.63	4.00	16.5	17.6	12.00	1.50	11.0/2500	12.6	0.78
C2052HP	31.75	19.05	9.53	7.22	5.12	20.5	21.8	15.00	2.03	20.4/4636	22.8	1.25
C2062HP	38.10	22.23	12.70	8.31	6.00	25.8	26.8	17.00	2.42	24.0/5455	27.1	1.72
C2082HP	50.80	28.58	15.75	11.40	8.05	32.4	33.8	24.00	3.25	50.0/11364	52.0	2.82
C2042H–HP	25.40	15.88	7.85	5.63	4.00	18.8	19.9	12.00	2.03	11.0/2500	13.2	0.95
C2052HPF1	31.75	19.05	9.40	7.03	5.12	20.0	21.5	15.30	1.85	15.0/3409	17.3	1.21
C2052HPF3	31.75	19.05	9.53	7.02	5.13	20.1	21.6	15.09	2.03	19.6/4455	21.6	1.20
C2052H–HP	31.75	19.05	9.53	7.22	5.12	22.1	23.4	15.00	2.42	20.4/4545	23.5	1.44
C2062H–HP	38.10	22.23	12.70	8.31	6.00	29.2	30.2	17.00	3.25	24.0/5455	27.6	1.99
C2082H–HP	50.80	28.58	15.75	11.40	8.05	35.7	37.0	24.00	4.00	50.0/11364	56.5	3.34
HP40	40.00	22.00	8.75	9.00	6.00	23.0	24.2	18.00	2.50	27.0/4545	28.0	1.49
HB40F1	40.00	22.00	9.00	9.00	6.00	23.0	24.5	18.00	2.50	20.0/4546	22.0	1.58
HB41.4	41.40	25.40	15.00	13.80	10.50	35.5	37.0	32.00	4.00	45.0/10227	48.0	4.20
HP50	50.00	31.00	14.50	13.20	10.40	31.1	32.5	25.00	3.10	30.0/6818	34.2	3.29
HP50F4	50.00	31.00	15.00	13.20	10.20	36.5	38.0	25.00	4.00	40.0/9091	44.8	3.73
HB50	50.00	31.00	15.00	14.00	10.20	36.0	37.5	25.00	4.00	40.0/9091	43.2	3.98
HB50.8F8	50.80	32.00	20.00	19.10	12.40	44.6	46.4	40.00	5.0/4.0	100.0/22727	108.0	6.75
C1655HP	50.80	30.00	10.50	13.00	8.20	27.4	28.9	26.00	3.10	42.0/9545	48.2	2.72
HP50.8	50.80	26.00	15.88	20.00	14.30	41.0	42.2	38.10	4.80	100.0/22727	108.0	5.32
HB50.8F9	50.80	35.00	12.00	15.50	10.20	36.0	37.3	30.00	5.00	70.0/15909	77.0	4.92
63HPF1	63.00	40.00	15.00	16.00	12.10	35.0	36.2	28.50	4.00	50.0/11364	56.7	4.20
DH4202HP	50.80	31.80	15.00	14.00	10.10	36.3	39.0	26.00	3.80	42.0/9545	51.6	3.75
DH4203HP	76.20	31.80	15.00	14.00	10.10	36.3	39.0	26.00	3.80	42.0/9545	47.1	3.01

Hollow pin chains
Ketten mit Hohlbolzen

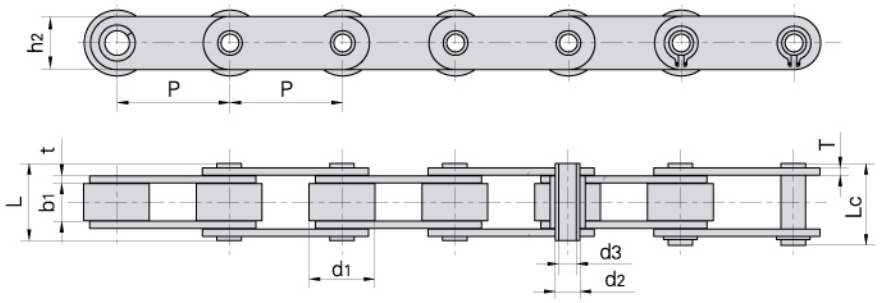

Donghua Chain No. *Donghua Ketten Nr.*	Pitch *Teilung*	Roller diameter *Rollen-durch-messer*	Width between inner plates *Innere Breite*	Pin diameter *Bolzen-durch-messer*		Pin length *Bolzen-länge*		Inner plate depth *Innen-laschen-höhe*	Plate thickness *Laschen-dicke*	Ultimate tensile strength *Min. Bruchkraft*	Average tensile strength *Durchschn. Bruchkraft*	Weight per meter *Gewicht*
	P	d_1 max	b_1 min	d_2 max	d_3 min	L max	Lc max	h_2 max	t/T max	Q min	Q_0	q
	mm	mm	mm	mm	mm	mm	mm	mm	mm	kN/LB	kN	kg/m
DH42035HP	88.9	31.80	15.00	14.00	10.1	36.3	39.0	26.0	3.8	42.0/9545	51.1	2.79
DH4204HP	101.6	31.80	15.00	14.00	10.1	36.3	39.0	26.0	3.8	42.0/9545	51.6	2.63
DH8403HP	76.2	47.60	19.00	19.05	13.6	43.8	46.3	39.0	5.1/3.8	84.3/19159	130.3	6.81
DH8404HP	101.6	47.60	19.00	19.05	13.6	43.8	46.3	39.0	5.1/3.8	84.3/19159	130.3	5.78
DH8406HP	152.4	47.60	19.00	19.05	13.6	43.8	46.3	39.0	5.1/3.8	84.0/19091	130.3	5.18
HB38.1F2	38.1	25.40	12.70	9.50	6.6	26.6	28.0	19.1	2.3	20.0/4545	22.4	2.07
HB50.8F3	50.8	30.00	16.00	14.00	9.0	36.4	37.5	25.5	3.1	42.0/9545	47.0	3.20
HB75	75.0	40.00	22.00	18.00	12.2	42.0	44.0	35.0	4.0	60.0/13636	72.0	5.57
HB76.2	76.2	31.75	15.50	12.70	9.5	35.5	37.0	26.0	4.0	42.0/9545	49.2	3.25
HB76.2F2	76.2	47.60	20.00	24.00	18.5	44.5	46.1	40.0	5.0/4.0	79.0/17953	92.5	6.77
HB80	80.0	50.00	20.00	24.00	18.5	44.5	46.1	40.0	5.0/4.0	79.0/17953	92.5	6.81
HP100	100.0	45.00	22.00	16.00	12.0	46.0	47.5	35.0	5.0	75.0/17044	90.0	6.20
HP100F1	100.0	45.00	22.00	18.00	12.0	47.2	48.5	35.0	5.0	75.0/17044	90.0	6.15

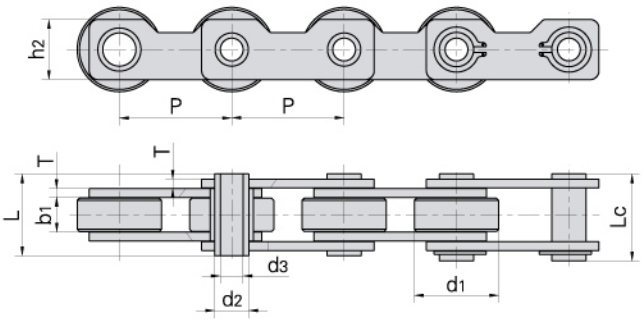

Donghua Chain No. *Donghua Ketten Nr.*	Pitch *Teilung*	Roller diameter *Rollen-durch-messer*	Width between inner plates *Innere Breite*	Pin diameter *Bolzen-durch-messer*		Pin length *Bolzen-länge*		Inner plate depth *Innen-laschen-höhe*	Plate thickness *Laschen-dicke*	Ultimate tensile strength *Min. Bruchkraft*	Average tensile strength *Durchschn. Bruchkraft*	Weight per meter *Gewicht*
	P	d_1 max	b_1 min	d_2 max	d_3 min	L max	Lc max	h_2 max	T	Q min	Q_0	q
	mm	mm	mm	mm	mm	mm	mm	mm	mm	kN/LB	kN	kg/m
HB50.8F1	50.8	38.1	15.7	15.5	10.3	35.2	36.7	27.2	4.00	55.46/51650	58.8	4.97

Hollow pin chains
Ketten mit Hohlbolzen

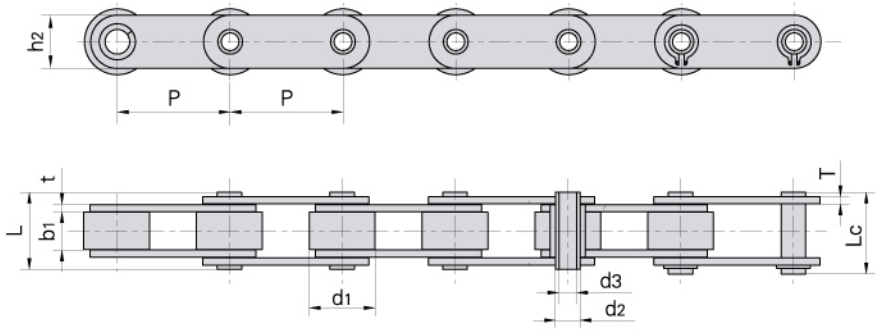

Donghua Chain No. *Donghua Ketten Nr.*	Pitch *Teilung*	Roller diameter *Rollen-durch-messer*	Width between inner plates *Innere Breite*	Pin diameter *Bolzen-durch-messer*		Pin length *Bolzen-länge*		Inner plate depth *Innen-laschen-höhe*	Plate thickness *Laschen-dicke*	Ultimate tensile strength *Min. Bruchkraft*	Average tensile strength *Durchschn. Bruchkraft*	Weight per meter *Gewicht*
	P	d_1 max	b_1 min	d_2 max	d_3 min	L max	Lc max	h_2 max	t/T max	Q min	Q_0	q
	mm	mm	mm	mm	mm	mm	mm	mm	mm	kN/LB	kN	kg/m
HP101.6F1	101.60	47.60	19.00	19.00	13.20	46.2	48.0	40.0	5.0/4.0	53.0/12045	58.20	6.09
HP101.6F2	101.60	66.70	25.40	26.90	20.10	59.2	60.7	51.0	7.1/5.1	150.0/34088	160.00	14.23
HP152	152.40	66.70	25.40	26.90	19.56	57.2	59.5	50.8	7.1/5.1	94.0/21362	107.80	9.90
HP152.4F1	152.40	47.60	19.00	19.00	13.20	46.2	48.0	40.0	5.0/4.0	54.0/12270	59.50	5.00
C2102HP	63.50	39.67	18.90	13.60	9.50	40.3	42.0	30.0	4.00	60.0/13636	72.00	5.13
C2062H–HPF3	38.10	22.23	12.70	8.31	6.00	25.8	26.8	17.0	2.42	24.0/5455	27.10	1.72
HP130	130.00	40.00	21.00	18.10	12.10	41.3	42.5	35.0	3.80	80.0/18183	89.60	4.21
HB50.8F12	50.80	28.58	16.00	14.00	9.00	36.4	37.5	25.5	3.50	42.0/9545	47.00	3.26
HB25.4F2	25.40	15.89	17.26	9.00	6.35	31.3	32.5	20.0	2.50	20.0/4545	22.40	1.97
HB50.8F11	50.80	38.10	16.00	13.80	9.70	37.2	39.5	25.4	3.90	57.0/12953	63.84	5.01
HB63F11	63.00	40.00	20.00	20.00	18.00	42.5	43.5	42.0	4.00	46.0/10454	50.60	5.83
HB65	65.00	45.00	20.00	25.00	18.00	38.0	40.0	40.0	3.00	46.0/10454	50.60	4.49
HB63.5F1	63.50	32.00	15.00	16.00	12.20	32.0	33.0	25.0	3.00	20.4/4636	22.80	2.69
HB63F12	63.00	30.00	10.00	11.40	8.10	26.7	28.1	26.5	3.10	50.0/11364	56.50	2.39
HB100F10	100.00	45.00	33.00	18.00	12.10	48.5	49.7	35.0	5.00	75.0/17046	84.70	6.05
HB100F11	100.00	40.00	20.60	16.00	12.50	42.1	43.4	35.0	4.00	75.0/17046	84.70	4.58
HB38.1F6–R	38.10	25.40	15.20	14.00	10.20	34.5	36.5	27.0	3.70	45.0/10228	49.50	3.20
HB 25.4F4	25.40	20.00	11.00	12.00	8.35	27.0	28.4	24.0	3.00	32.0/7273	35.80	2.48
HB100F9	100.00	45.00	32.80	18.00	12.40	49.0	49.0	35.0	5.00	75.0/17046	84.70	6.14
HB100F7	100.00	30.00	15.00	16.00	12.30	36.5	37.8	35.0	4.00	75.0/17046	84.70	3.49
HB100F3	100.00	30.00	24.00	15.95	10.30	46.0	47.3	35.0	4.00	75.0/17046	84.70	4.04
HB50.42	50.42	37.30	15.00	14.00	10.20	36.0	37.5	26.2	4.00	40.0/9090	44.80	4.46

Hollow pin chains
Ketten mit Hohlbolzen

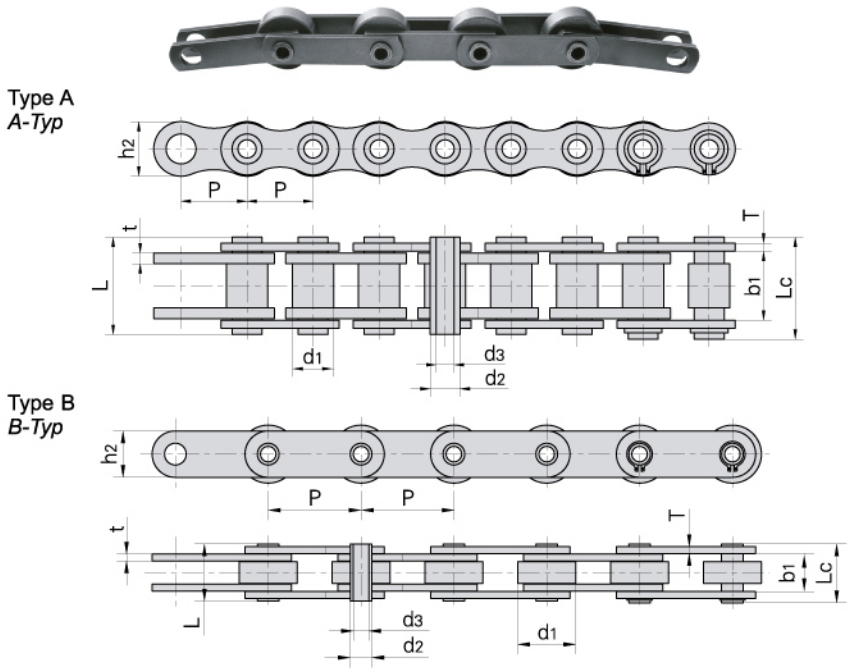

Donghua Chain No. *Donghua Ketten Nr.*	Pitch *Teilung*	Roller diameter *Rollen-durch-messer*	Width between inner plates *Innere Breite*	Pin diameter *Bolzen-durch-messer*		Pin length *Bolzen-länge*		Inner plate depth *Innen-laschen-höhe*	Plate thickness *Laschen-dicke*	Ultimate tensile strength *Min. Bruchkraft*	Average tensile strength *Durchschn. Bruchkraft*	Weight per meter *Gewicht*	Type *Typ*
	P	d_1 max	b_1 min	d_2 max	d_3 min	L max	Lc max	h_2 max	t/T max	Q min	Q_0	q	
	mm	mm	mm	mm	mm	mm	mm	mm	mm	kN/LB	kN	kg/m	
08BHPF2	12.700	8.51	13.20	6.65	5.20	18.0	19.2	11.8	1.6/1.3	10.0/2273	11.4	0.50	A
08BHPF3	12.700	8.51	13.40	6.65	4.00	19.0	20.2	11.8	1.70	14.0/3182	16.8	0.69	A
HB12.7	12.700	8.51	13.40	6.65	4.10	19.0	20.2	11.8	1.70	14.0/3182	16.8	0.69	A
08BHPF8	12.700	8.51	11.30	6.30	4.50	16.7	18.5	11.8	1.60	11.0/2500	12.1	0.80	A
40HPF1–D3	12.700	8.51	11.60	6.35	4.36	20.6	20.6	12.0	1.50	11.0/2500	12.1	0.77	A
10BHPF1	15.875	10.16	13.41	7.03	5.00	19.2	20.2	14.0	1.85	17.0/3864	20.6	0.83	A
10BHPF2	15.875	10.16	10.40	7.03	5.00	17.0	18.0	14.0	1.85	15.0/3409	17.3	0.74	A
12BHPF1	19.050	12.07	16.00	8.03	5.40	22.7	23.9	15.8	1.85	25.0/5682	28.8	1.09	A
16BHPF1	25.400	15.88	25.58	11.50	8.10	36.5	37.6	21.0	4.15/3.1	45.0/10227	52.2	2.21	A
50HPF1	15.875	10.16	13.60	7.03	5.13	20.7	21.9	14.4	2.03	18.0/4091	21.6	0.92	A
60HPF2	19.050	11.91	11.23	5.63	4.05	16.5	17.6	10.4	1.50	10.0/2273	10.8	0.62	A
C12BHPF9	19.050	12.07	15.80	8.03	5.00	22.4	23.9	16.1	1.85	25.0/5682	28.8	1.26	B
12BHPF9	19.050	12.07	15.80	8.03	5.00	22.4	23.9	16.1	1.58	25.0/5682	28.8	1.18	A
60HPF3	19.050	11.91	17.20	8.40	6.10	24.7	26.0	18.0	2.03	20.0/4546	24.0	1.54	A
63HP	63.000	40.00	23.50	16.00	12.00	35.3	38.3	28.6	4.00	65.0/14773	71.5	4.14	B
63HPF2	63.000	40.00	25.80	14.00	8.08	39.1	41.1	20.0	5.00	50.0/11364	65.7	4.17	B
63HPF4	63.000	40.00	23.50	16.00	12.30	34.7	37.7	28.6	4.00	44.0/10000	57.2	4.13	B
63HPF6	63.000	40.00	28.94	16.00	10.30	41.8	43.4	28.6	4.00	44.0/10000	57.2	5.18	B
63HPF11	63.000	40.00	23.50	16.00	12.20	34.7	37.7	28.6	4.00	65.0/147333	71.5	4.25	B
63HPF12	63.000	40.00	23.50	16.00	12.20	34.7	37.7	28.0	4.00	44.0/10000	57.2	4.02	B
C2122HPF1	76.200	47.60	29.00	17.81	12.70	43.3	44.7	38.1	4.80	53.3/12123	59.2	7.05	B

Engineering bush chains
Buchsenförderketten

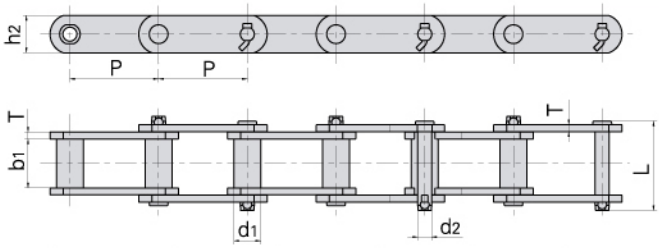

ANSI Chain No. *ANSI Ketten Nr.*	Donghua Chain No. *Donghua Ketten Nr.*	Pitch *Teilung* P mm	Bush diameter *Buchsen-durch-messer* d_1 max mm	Width between inner plates *Innere Breite* b_1 min mm	Pin diameter *Bolzen-durch-messer* d_2 max mm	Pin length *Bolzen-länge* L max mm	Plate depth *Laschen-höhe* h_2 max mm	Plate thickness *Laschen-dicke* T max mm	Ultimate tensile strength *Min. Bruchkraft* Q min kN/LB	Average tensile strength *Durchschn. Bruchkraft* Q_0 kN	Weight per meter *Gewicht* q kg/m
S102B		101.60	25.40	54.10	15.88	111.3	38.10	9.7	160.0/35993	176.0	10.4
S110		152.40	32.00	54.10	15.88	111.3	38.10	9.7	160.0/35993	176.0	9.8
S111		120.90	36.60	66.80	19.05	131.2	50.80	9.7	214.0/48141	235.4	15.9
S131		78.11	32.00	33.50	15.88	90.5	38.10	9.7	160.0/35993	176.0	11.6
S150		153.67	44.70	84.30	25.40	164.6	63.50	12.7	378.0/85034	416.0	25.7
S188		66.27	22.40	26.90	12.70	68.6	28.40	6.4	102.0/22946	112.2	5.6
S856		152.40	44.40	76.20	25.40	154.9	63.50	12.7	365.0/82110	401.5	25.0
S857		152.40	44.40	76.20	25.40	154.9	82.60	12.7	432.0/97182	475.2	32.0
S859		152.40	60.40	95.30	31.75	188.5	101.60	16.0	690.0/155221	759.0	55.9
S864		177.80	60.40	95.30	31.75	188.5	101.60	16.0	690.0/155221	759.0	51.8
	S102.5	102.36	34.93	57.15	19.05	115.0	44.45	9.5	214.0/48141	235.4	14.09
	S110F1	152.40	31.75	53.48	15.88	111.0	44.45	9.5	160.0/35993	176.0	10.50
	S111F1	120.90	36.51	66.68	19.05	125.0	50.80	9.5	214.0/48141	235.4	15.46

Engineering bush chain with attachments
Anbauteile für Buchsenförderketten

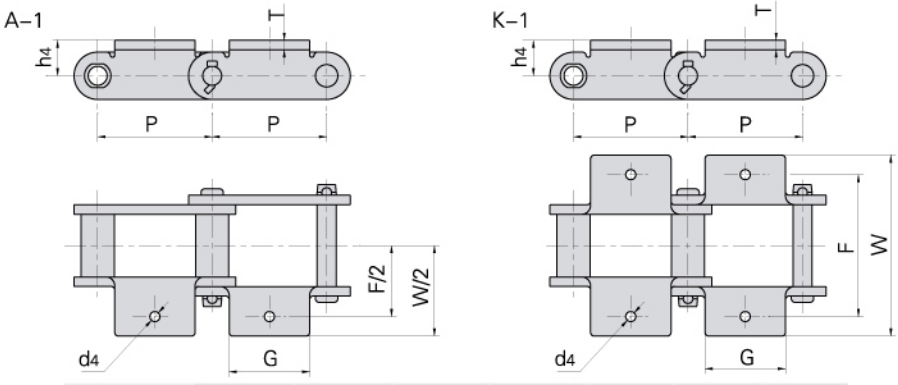

ANSI Chain No. *ANSI Ketten Nr.*	P mm	G mm	F mm	W mm	h_4 mm	d_4 mm	T mm
*S102B	101.60	77.0	121.0	180.8	25.4	10.2	9.7
S131	78.11	73.9	104.6	157.0	25.4	13.5	9.7
S188	66.27	54.6	95.2	131.6	20.6	10.2	6.4

*S102B only with A-1 attachments
**S102B nur mit A-1 Befestigungslaschen*

Engineering bush chain with attachments
Anbauteile für Buchsenförderketten

A–2

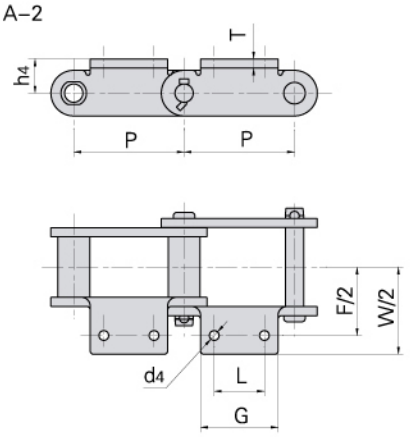

K–2

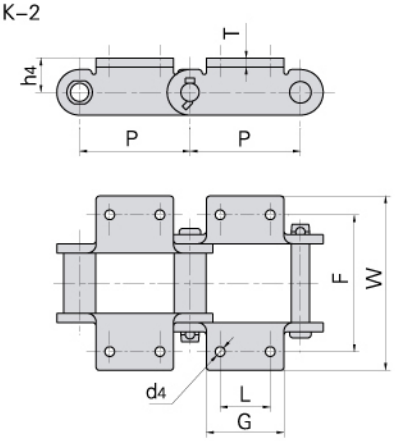

ANSI Chain No. *ANSI Ketten Nr.*	Donghua Chain No. *Donghua Ketten Nr.*	P	L	G max	F	W max	h4	d4 min	T
		mm	mm	mm	mm	mm	mm	mm	mm
S102B		101.60	44.50	69.9	134.90	180.80	25.40	10.2	9.7
S110		152.40	44.50	89.6	134.90	180.80	25.40	10.2	9.7
S111		120.90	58.70	92.7	158.80	210.80	38.10	13.5	9.7
S131		78.11	38.10	73.9	104.60	157.00	25.40	13.5	9.7
S150		153.67	69.90	108.7	190.50	249.40	47.80	13.5	12.7
S188		66.27	31.80	54.6	106.40	131.60	20.60	8.6	6.4
S856		152.40	63.50	103.1	184.20	241.30	47.80	16.8	12.7
	S102.5	102.36	44.45	69.0	136.53	163.51	28.58	9.5	9.5
	S110F1	152.40	44.45	88.9	134.94	165.10	27.78	10.3	9.5
	S111F1	120.90	58.70	87.5	158.75	196.85	38.10	13.7	9.5

A–22

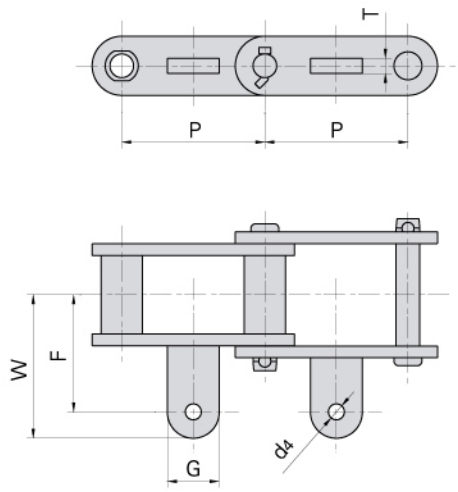

ANSI Chain No. *ANSI Ketten Nr.*	P	G	F	W	d4	T
	mm	mm	mm	mm	mm	mm
S188	66.27	49.2	45.2	61.2	10.2	10.4

Engineering bush chain with attachments
Anbauteile für Buchsenförderketten

K–3

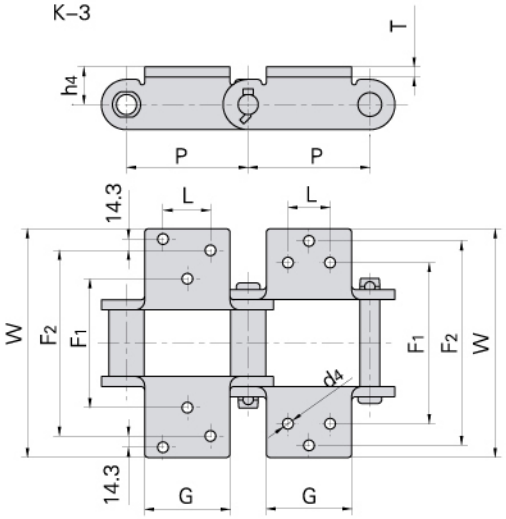

ANSI Chain No. *ANSI Ketten Nr.*	P	G	L	F_1	F_2	W	h_4	d_4	T
	mm	mm	mm	mm	mm	mm	mm	mm	mm
S150	153.67	109.5	69.9	190.5	292.1	347.5	47.8	13.5	13.5
S856	152.40	152.4	69.9	166.6	277.9	349.3	47.8	13.5	13.5

K–35

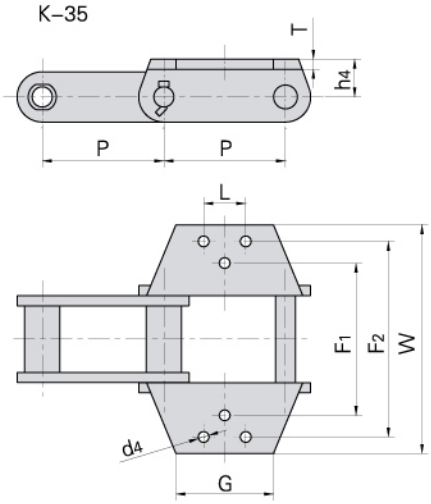

ANSI Chain No. *ANSI Ketten Nr.*	P	G	L	F_1	F_2	W	h_4	d_4	T
	mm	mm	mm	mm	mm	mm	mm	mm	mm
S856	152.4	146.1	63.5	184.2	298.5	349.3	47.8	16.8	13.5

K–44

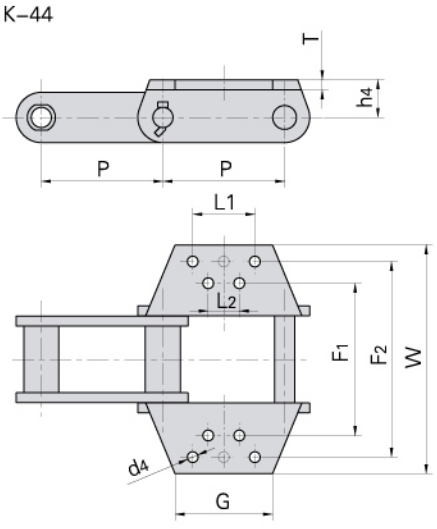

ANSI Chain No. *ANSI Ketten Nr.*	P	G	L_1	L_2	F_1	F_2	W	h_4	d_4	T
	mm	mm	mm	mm	mm	mm	mm	mm	mm	mm
S857	152.4	146.1	88.9	88.9	177.8	304.8	355.6	63.5	13.5	13.5
S859	152.4	146.1	114.3	69.9	228.6	330.2	381.0	76.2	16.8	13.5
S864	177.8	146.1	139.7	95.3	228.6	330.2	381.0	76.2	16.8	13.5

ESCALATOR STEP-CHAINS
FAHRTREPPENKETTEN



Passenger conveyor chains
Ketten für Fahrsteige

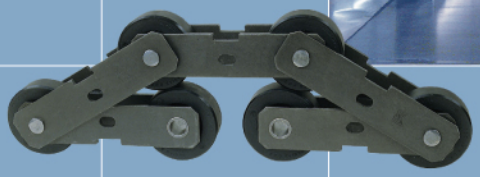



Escalator step-chains
Ketten für Fahrtreppen

Escalator step-chains
Fahrtreppenketten

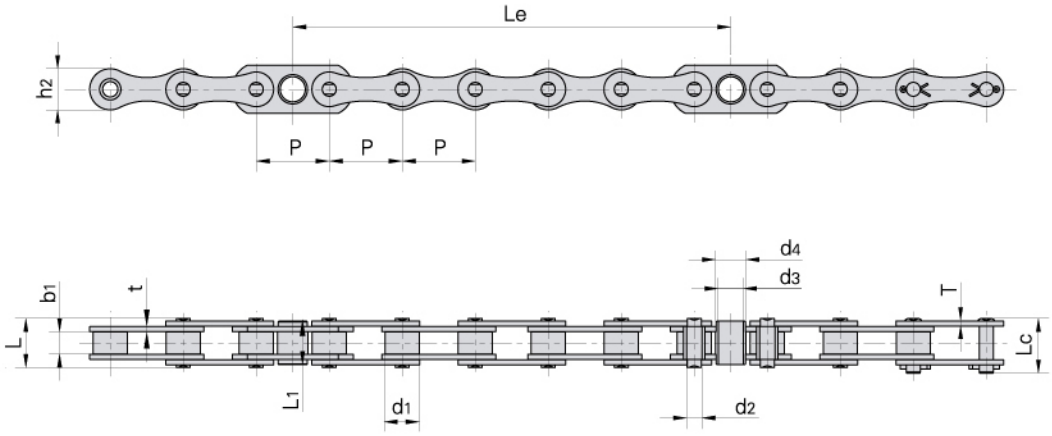

Donghua Chain No. *Donghua Ketten Nr.*	Pitch *Teilung*	Roller diameter *Rollen-durch-messer*	Width between inner plates *Innere Breite*	Pin diameter *Bolzen-durch-messer*	Pin length *Bolzen-länge*		Bush diameter *Buchsen-durch-messer*		Bush length *Buchsen-länge*	Plate dimension *Laschen-abmess-ungen*		Distamce between steps (six pitches) *Abstand zwischen Stufen (6Teilungen)*	Ultimate tensile strength *Min. Bruchkraft*	Average tensile strength *Durchschn. Bruchkraft*	Weight per step *Gewicht pro Stufe*
	P	d_1 max	b_1 min	d_2	L max	Lc max	d_3	d_4	L_1 max	h_2 max	t/T	Le	Q min	Q_0	q
	mm	mm	mm	mm	mm	mm	mm	mm	mm	mm	mm	mm	kN/LB	kN	kg
C–13T	68.40	32.0	20.6	14.29	45.0	50.85	23.5	28.5	40.85	38.5	4.8	410.4	127.4/28640	140.0	2.30
P67–FD	67.73	28.5	27.0	14.29	52.3	57.00	23.0	27.0	36.85	38.0	4.8	406.4	130.0/299225	140.0	2.19
C–16V	68.40	28.0	29.6	14.29	53.9	59.60	22.0	26	29.35	39.6	4.8	410.4	161.7/36351	178.0	2.38
C–12V	68.40	28.0	20.7	12.70	41.9	47.40	21.0	26	30.50	39.6	4.0	410.4	140.0/31473	154.0	1.82
C–8V	68.40	28.0	20.7	12.70	41.9	47.40	21.0	26	30.50	39.6	4.0	410.4	100.0/224809	110.0	1.82
ST67HF2	67.73	28.5	27.0	14.63	52.7	57.00	23.0	27	36.85	40.0	4.8/5.5	406.4	186.2/41859	204.0	2.31
ST67HF1	67.73	28.5	27.0	14.63	52.7	57.00	23.0	27	36.85	40.0	4.8/5.5	406.4	160.0/35969	176.0	2.31

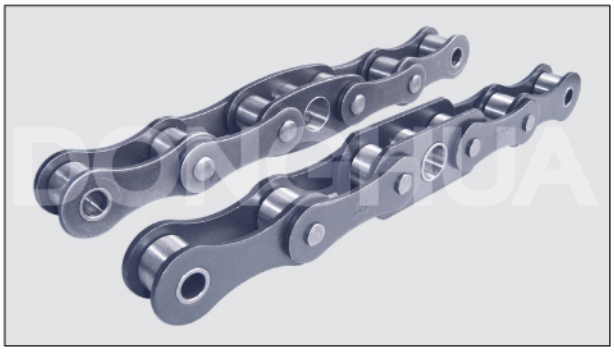

Escalator step-chains
Fahrtreppenketten

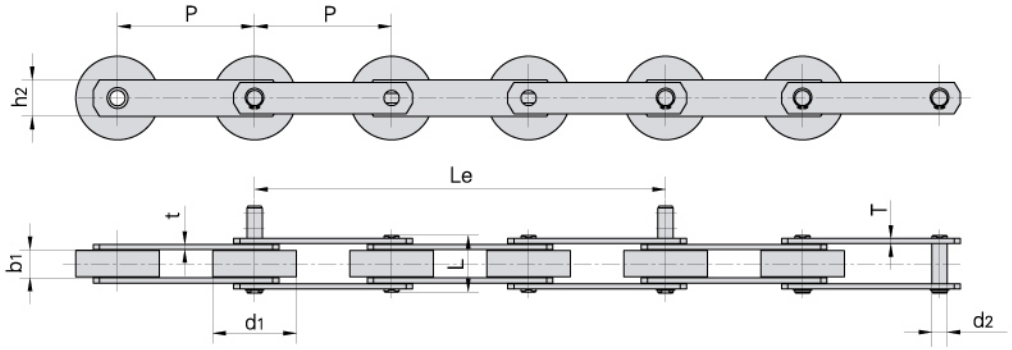

Donghua Chain No. *Donghua Ketten Nr.*	Pitch *Teilung*	Roller diameter *Rollen-durch-messer*	Width between inner plates *Innere Breite*	Pin diameter *Bolzen-durch-messer*	Pin length *Bolzen-länge*	Inner plate depth *Innen-laschen-höhe*	Plate thickness *Laschen-dicke*	Distance between steps (three pitches) *Abstand zwischen Stufen (3 Teilungen)*	Ultimate tensile strength *Min. Bruchkraft*	Average tensile strength *Durchschn. Bruchkraft*	Weight per step *Gewicht pro Stufe*
	P	d_1 max	b_1 min	d_2 max	L max	h_2	t / T max	Le	Q min	Q_0	q
	mm	mm	mm	mm	mm	mm	mm	mm	kN/LB	kN	kg
ST131	131.33	80.00	27.0	24.00	54.5	50.0	5.0	394.00	180.0/40465	198.0	3.70
T131	131.33	80.00	27.0	14.63	54.5	50.0	5.0	394.00	180.0/40465	198.0	2.48
JJT131	131.33	80.00	27.0	14.63	56.5	35.0	5.0	394.00	123.0/27651	150.0	2.31
ST133	133.33	70.00	27.0	14.63	55.0	40.0	5.0	400.00	180.0/40465	198.0	2.45
JJT133	133.33	70.00	27.0	14.63	56.5	35.0	5.0	400.00	127.4/28640	140.1	2.38
ST133F1	133.33	80.00	27.0	24.00	54.5	50.0	5.0	400.00	180.0/40465	198.0	3.53
ST133F3	133.33	75.00	25.4	14.63	54.2	35.0	5.0	400.00	123/27651	135.3	2.16
ST133F4	133.33	76.20	27.0	14.63	55.0	40.0	5.0	400.00	180/40465	198.0	2.50
ST133F5	133.33	39.37	33.7	22.00	70.0	60.0	7.0/6.0	400.00	350/78683	385.0	4.78
ST133F6	133.33	39.37	33.7	16.00	65.0	50.0	5.0	400.00	170/38217	187.0	3.36
JJT131F1	131.33	76.20	23.6	12.70	52.0	35.0	5.0	394.00	90/20232	99.0	2.05
JJT131F2	131.33	76.20	23.6	12.70	52.0	35.0	5.0	394.00	90/20232	99.0	2.05
JJT131F3	131.33	76.20	23.6	15.00	52.0	35.0	5.0	394.00	123/27651	135.3	2.20
JJT131F4	131.33	76.20	23.6	15.00	52.0	35.0	5.0	394.00	123/27651	135.3	2.20
ST135F2	135.47	76.20	23.6	12.7/15	54.2	35.0	5.0	406.40	90/20232	99.0	2.05



Escalator step-chains
Fahrtreppenketten

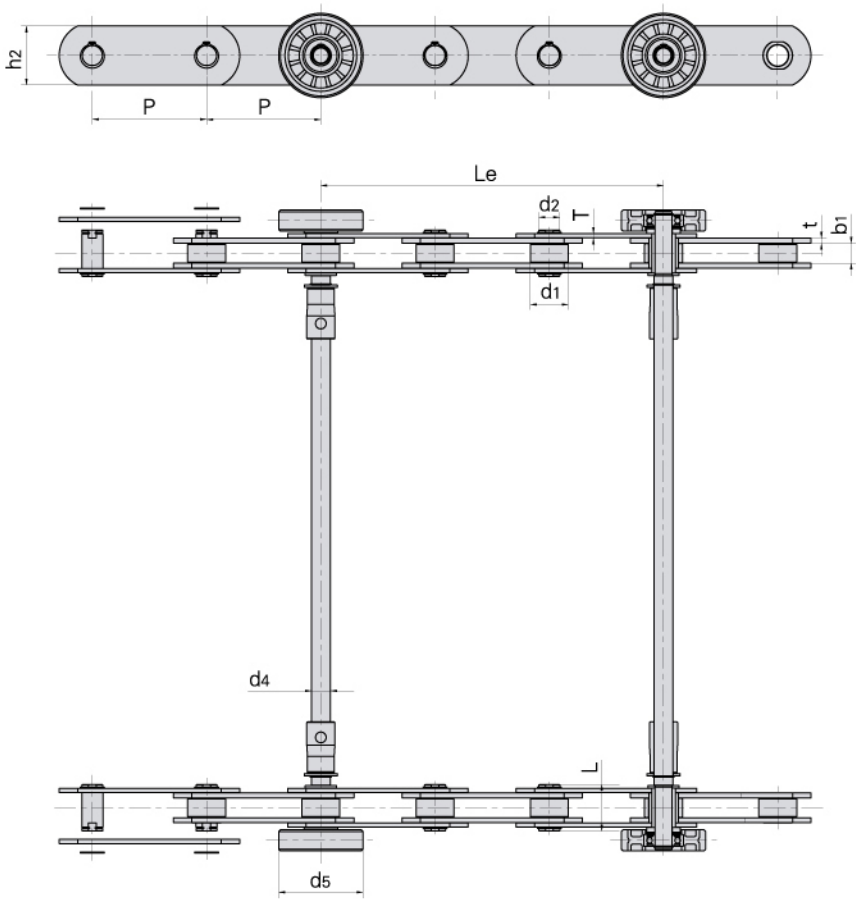

Donghua Chain No. *Donghua Ketten Nr.*	Pitch *Teilung*	Roller diameter *Rollen-durch-messer*	Width between inner plates *Innere Breite*	Pin diameter *Bolzen-durch-messer*	Pin length *Bolzen-länge*	Inner plate depth *Innen-laschen-höhe*	Plate thickness *Laschen-dicke*	Distance between steps (three pitches) *Abstand zwischen Stufen (3 Teilungen)*	Axle diameter *Stufenbolzen-durchmesser*	Bearing roller diameter *Laufrollen-durch-messer*	Ultimate tensile strength *Min. Bruchkraft*
	P	d_1	b_1	d_2	L	h_2	t/T	Le	d_4	d_5	Q min
	mm	mm	mm	mm	mm	mm	mm	mm	mm	mm	kN/LB
PT135HPF4	135.466	45	23.5	25	55	70	6.0/5.0	406.4	22.226	100	250/56240

Escalator step-chains
Fahrtreppenketten

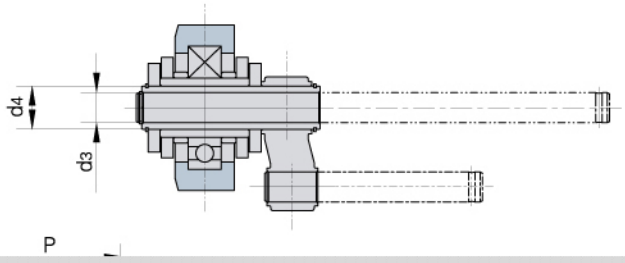

mm	mm	mm	mm	kN/LB	kN	kg/m
28.0	47.1	55.1	70.0	6.0/5.0	250.0/56818	275.0	11.26

mm	mm	mm	mm	mm
PT135HP	135.46	45.0	23.0	25.0	20.0

Escalator step-chains
Fahrtreppenketten



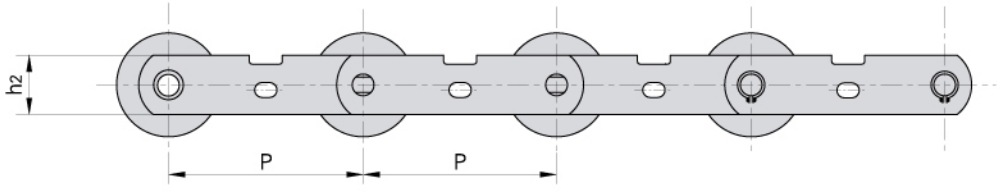

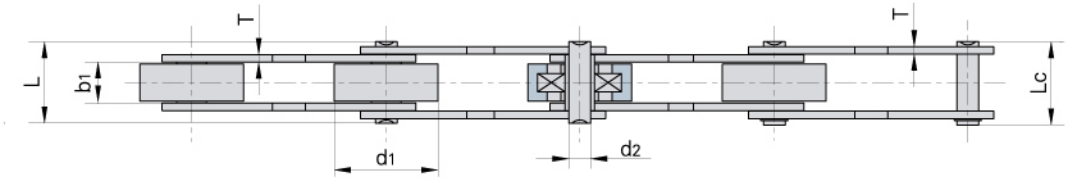

Donghua Chain No. *Donghua Ketten Nr.*	Pitch *Teilung*	Roller diameter *Rollen-durch-messer*	Width between inner plates *Innere Breite*	Pin diameter *Bolzen-durch-messer*	Pin length *Bolzen-länge*		Inner plate depth *Innen-laschen-höhe*	Plate thickness *Laschen-dicke*	Ultimate tensile strength *Min. Bruchkraft*	Average tensile strength *Durchschn. Bruchkraft*	Weight per meter *Gewicht*
	P	d_1 max	b_1 min	d_2 max	L max	Lc max	h_2 max	T max	Q min	Q_0	q
	mm	mm	mm	mm	mm	mm	mm	mm	kN/LB	kN	kg/m
PT131	131.33	70.0	27.0	14.63	55.0	56.0	40.0	5.0	180.0/40909	198.0	5.97
PT133	133.33	70.0	27.0	14.63	55.0	56.0	40.0	5.0	180.0/40909	198.0	5.75

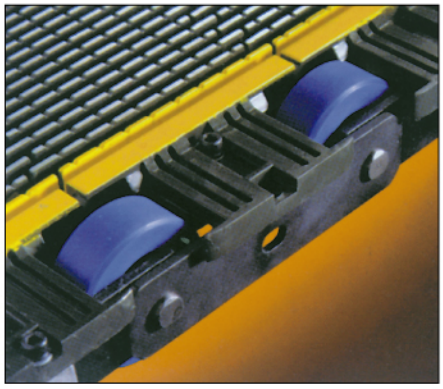

CONVEYOR CHAINS FOR STEEL MILL

FÖRDERKETTEN FÜR DIE STAHLINDUSTRIE



Conveyor chains for steel mill
Förderketten für die Stahlindustrie

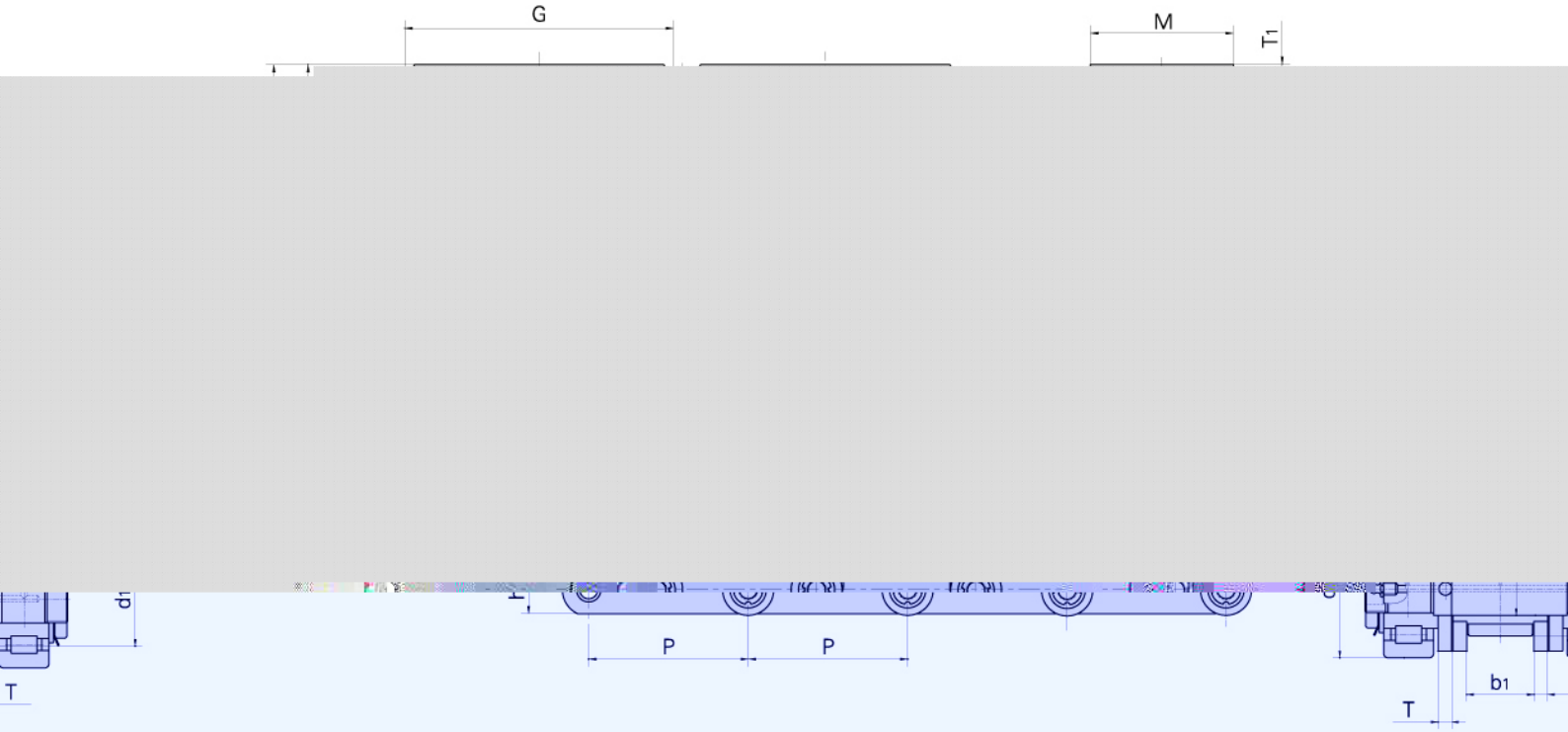

Donghua Chain No. *Donghua Ketten Nr.*	Pitch *Teilung*	Roller diameter *Rollen-durch-messer*		Width between inner plates *Innere Breite*	Pin diameter *Bolzen-durch-messer*	Pin length *Bolzen-länge*	Plate thickness *Laschen-dicke*	Plate depth *Laschen-höhe*	U t s Br
	P	d_1 max	d_5 max	b_1 min	d_2 max	L max	T max	h_2	
	mm	mm	mm	mm	mm	mm	mm	mm	
P500F1	500	107	160	78	62	325	20	150	800

Ultimate Tensile Strength *Min. Bruchkraft*
Q min
kN/LB
0/179966

Conveyor chains for steel mill
Förderketten für die Stahlindustrie

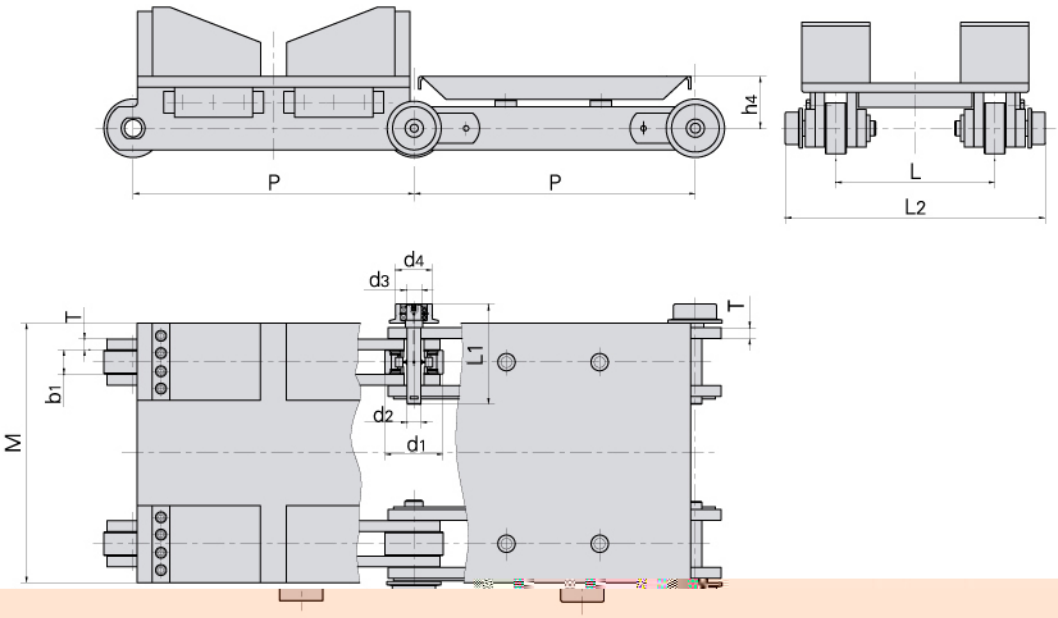

Donghua Chain No. *Donghua Ketten Nr.*	Pitch *Teilung*	Roller diameter *Rollen-durch-messer*		Width between inner plates *Innere Breite*	Pin diameter *Bolzen-durch-messer*		Pin length *Bolzen-länge*	Plate thickness *Laschen-dicke*	Attachment dimension *Befestigungs-laschen-abmessungen*				Ultimate tensile strength *Min. Bruchkraft*	Weight per meter *Gewicht*
	P	d_1 max	d_4 max	b_1 min	d_2 max	d_3 max	L_1 max	T max	L	L_2	M	h_4	Q min	q
	mm	mm	mm	mm	mm	mm	mm	mm	mm	mm	mm	mm	kN/LB	kg/m
P650	650	135	85	56	32	35	232	25	420	690	600	120	750/168718	214.5



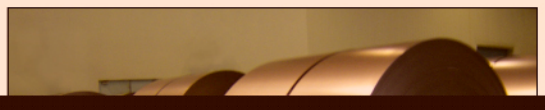

Conveyor chains for steel mill
Förderketten für die Stahlindustrie

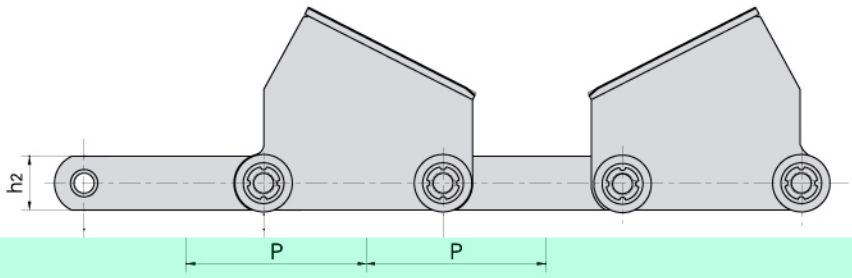

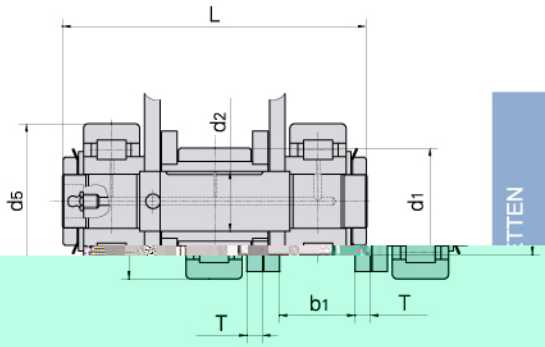

Donghua Chain No. *Donghua Ketten Nr.*	Pitch *Teilung*	Roller diameter *Rollen-durch-messer*		Width between inner plates *Innere Breite*	Pin diameter *Bolzen-durch-messer*	Pin length *Bolzen-länge*	Plate thickness *Laschen-dicke*	Plate depth *Laschen-höhe*	Ultimate tensile strength *Min. Bruchkraft*
	P	d_1 max	d_5 max	b_1 min	d_2 max	L max	T max	h_2	Q min
	mm	mm	mm	mm	mm	mm	mm	mm	kN/LB
P500F2	500	107	160	76	62	310	16	150	700/157470

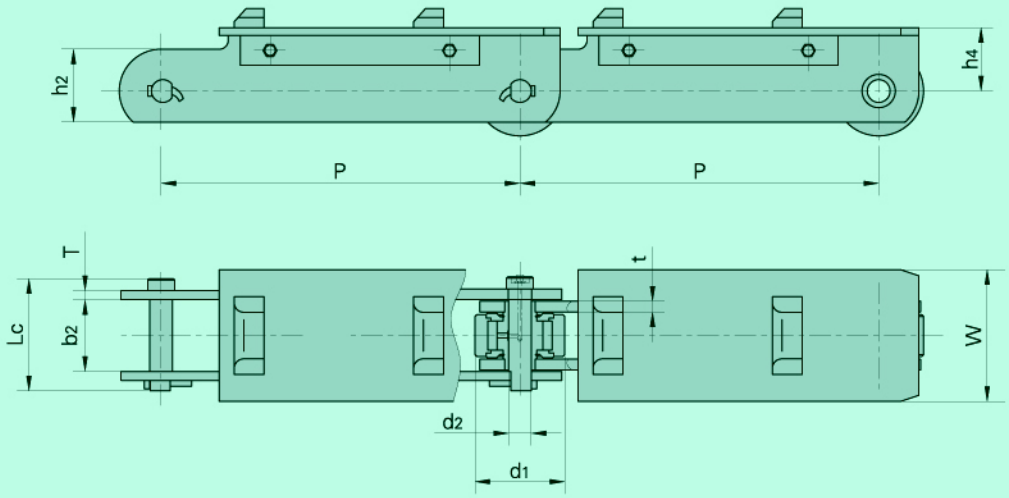

Donghua Chain No. *Donghua Ketten Nr.*	Pitch *Teilung*	Roller diameter *Rollen-durch-messer*	Width between outer plates *Breite zwischen den Außenlaschen*	Pin diameter *Bolzen-durch-messer*	Pin length *Bolzen-länge*	Plate depth *Laschen-höhe*	Plate thickness *Laschen-dicke*	Attachment dimension *Befestigungs-laschen-abmessungen*		Average tensile strength *Durchschn. Bruchkraft*
	P	d_1 max	b_2 min	d_2 max	Lc max	h_2	t/T max	h_4	W	Q_0
	mm	mm	mm	mm	mm	mm	mm	mm	mm	kN/LB
P600F1	600	150	117	38	187	122	18/15	105.7	220	1470/330687

Conveyor chains for steel mill
Förderketten für die Stahlindustrie

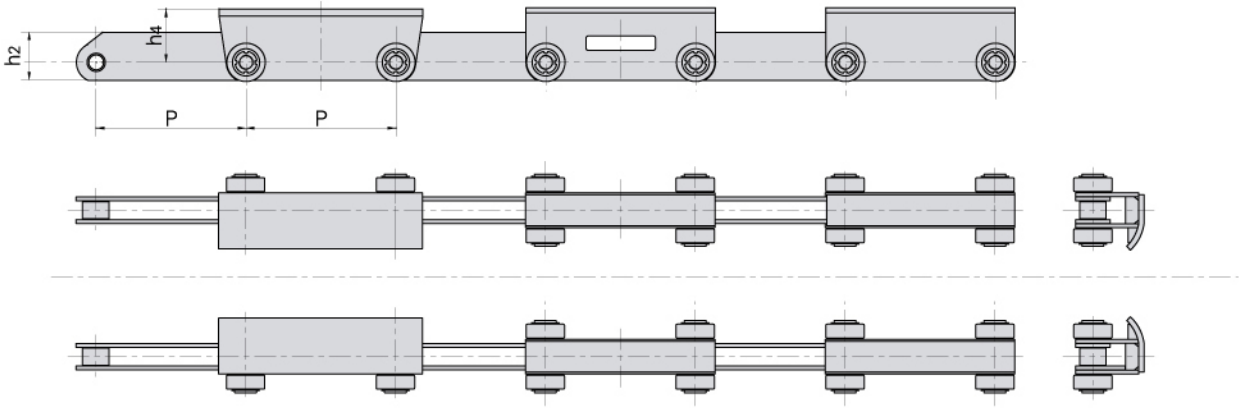

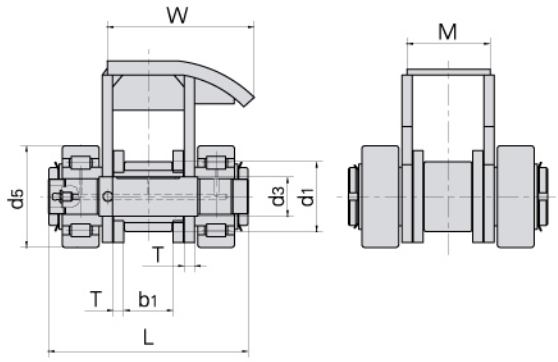

Donghua Chain No. *Donghua Ketten Nr.*	Pitch *Teilung*	Roller diameter *Rollen-durch-messer*		Width between inner plates *Innere Breite*	Pin diameter *Bolzen-durch-messer*	Pin length *Bolzen-länge*	Plate thickness *Laschen-dicke*	Attachment dimension *Befestigungs-laschen-abmessungen*				Ultimate tensile strength *Min. Bruchkraft*
	P	d_1 max	d_5 max	b_1	d_3 max	L max	T max	W	M	h_2	h_4	Q min
	mm	mm	mm	mm	mm	mm	mm	mm	mm	mm	mm	kN/LB
P625	625	107	160	78	62	310	16	227.5	130	200	215	700/157470

Conveyor chains for steel mill
Förderketten für die Stahlindustrie

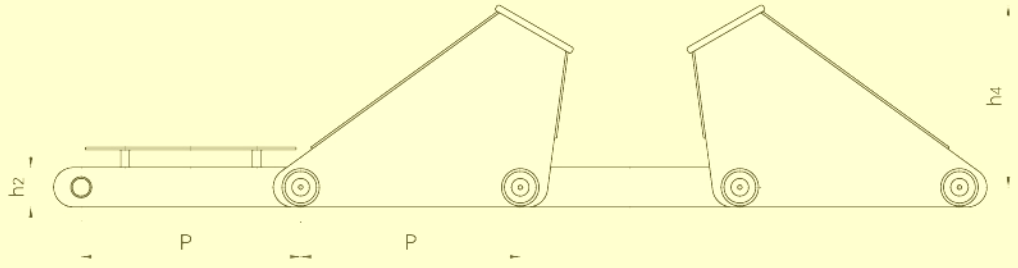

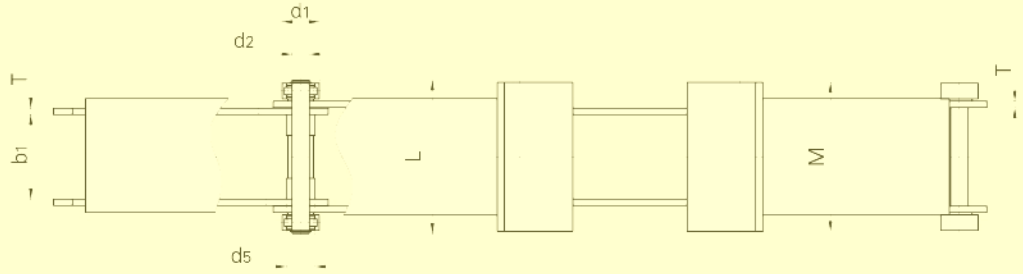

Pitch	Roller	Width	Pin	Plate					

Conveyor chains for steel mill
Förderketten für die Stahlindustrie

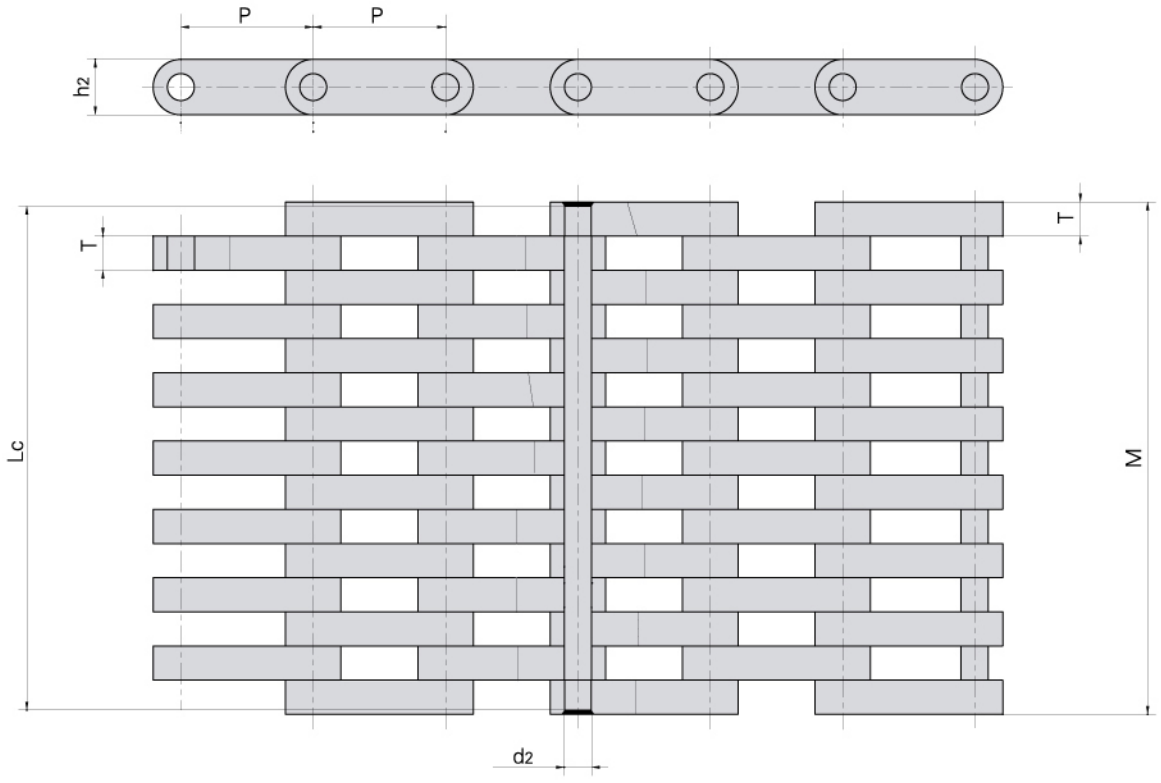

Donghua Chain No. *Donghua Ketten Nr.*	Pitch *Teilung*	Plate lacing *Laschen Kombination*	Pin diameter *Bolzen-durch-messer*	Pin length *Bolzen-länge*	Plate thickness *Laschen-dicke*	Plate dimension *Laschen-abmessungen*		Ultimate tensile strength *Min. Bruchkraft*	Average tensile strength *Durchschn. Bruchkraft*	Weight per meter *Gewicht*
	P		d_2 max	Lc max	T max	h_2	M	Q min	Q_0	q
	mm		mm	mm	mm	mm	mm	kN/LB	kN/LB	kg/m
LF155	155	7x8	31.5	595	40	65	605	3200/719864	3520/791851	202.2



Conveyor chains for steel mill
Förderketten für die Stahlindustrie

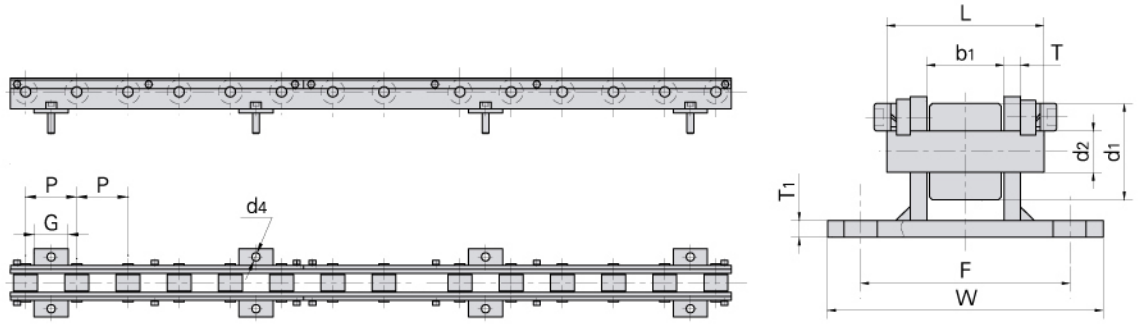

Donghua Chain No. *Donghua Ketten Nr.*	Pitch *Teilung*	Roller diameter *Rollen-durch-messer*	Width between inner plates *Innere Breite*	Pin diameter *Bolzen-durch-messer*	Pin length *Bolzen-länge*	Plate thickness *Laschen-dicke*	Attachment dimension *Befestigungs-laschen-abmessungen*					Weight per meter *Gewicht*
	P	d_1 max	b_1	d_2 max	L max	T max	T_1	W	F	d_4	G	q
	mm	mm	mm	mm	mm	mm	mm	mm	mm	mm	mm	Kg/m
P75F9	75	35	28	15	56	6	6	100	76	12	75	22.3

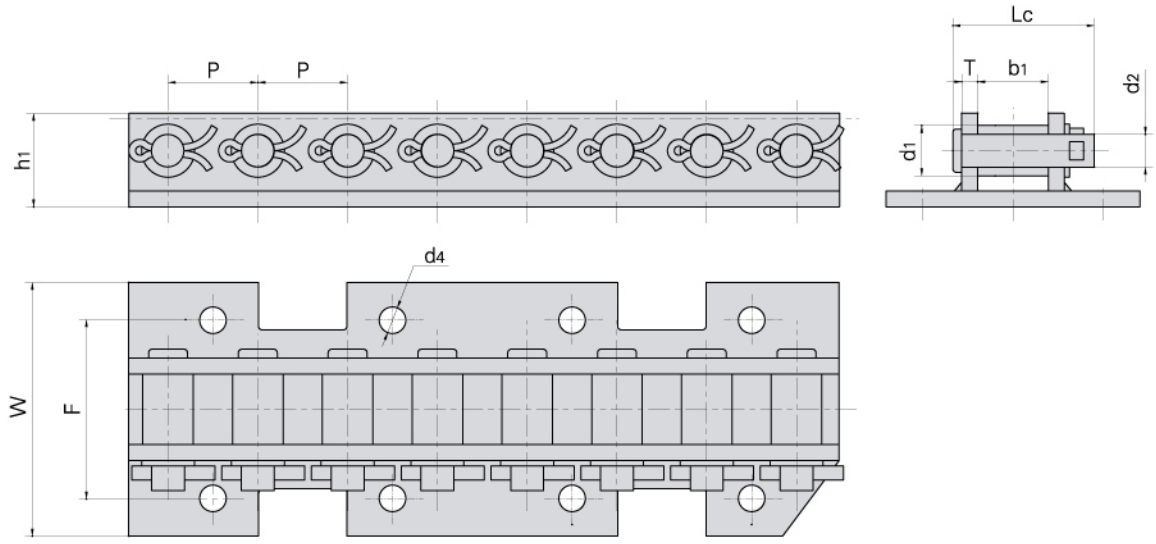

Donghua Chain No. *Donghua Ketten Nr.*	Pitch *Teilung*	Roller diameter *Rollen-durch-messer*	Width between inner plates *Innere Breite*	Pin diameter *Bolzen-durch-messer*	Pin length *Bolzen-länge*	Plate thickness *Laschen-dicke*	Attachment dimension *Befestigungs-laschen-abmessungen*				Ultimate tensile strength *Min. Bruchkraft*	Weight per meter *Gewicht*
	P	d_1 max	b_1	d_2 max	Lc max	T max	F	W	d_4	h_1	Q min	q
	mm	mm	mm	mm	mm	mm	mm	mm	mm	mm	kN/LB	kg/m
P50.8F10	50.8	28.6	40	18.5	80	9	101.6	143.6	15	53	193/43416	11.2

EYOR CHAINS
TTEN



SCRAPER CONVE
KRATZER-FÖRDERKET



Scraper conveyor chains
Kratzer-Förderketten

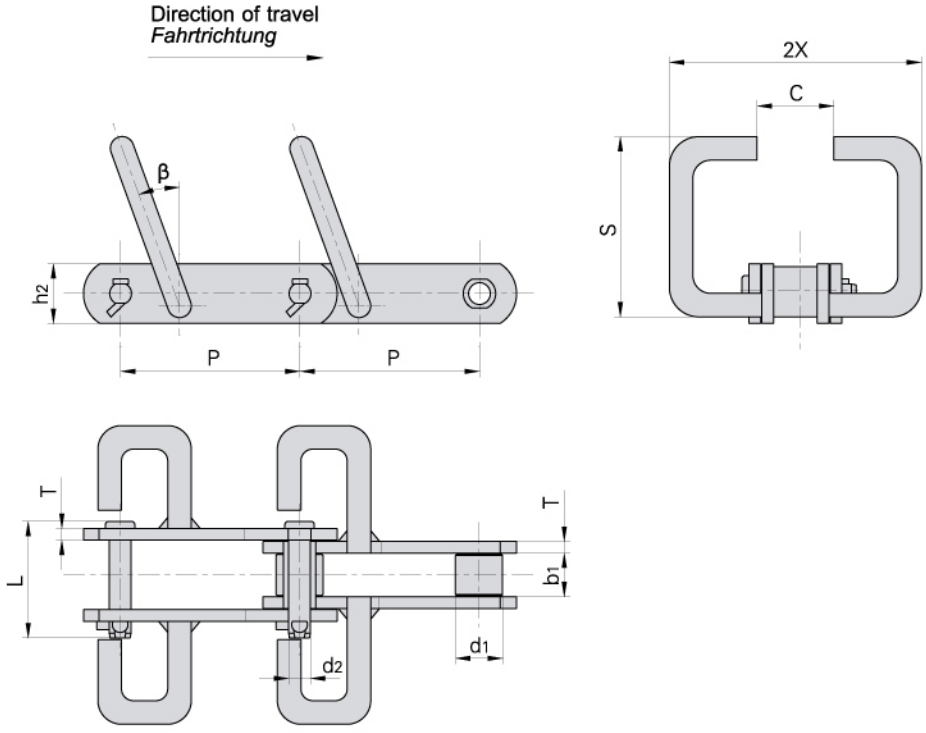

Donghua Chain No. *Donghua Ketten Nr.*	Pitch *Teilung*	Roller diameter *Rollen-durch-messer*	Width between inner plates *Innere Breite*	Pin diameter *Bolzen-durch-messer*	Pin length *Bolzen-länge*	Plate depth *Laschen-höhe*	Plate thickness *Laschen-dicke*	Attachment dimension *Befestigungs-laschen-abmessungen*				Ultimate tensile strength *Min. Bruchkraft*	Weight per meter *Gewicht*
	P	d_1 max	b_1	d_2	L	h_2	T	S	2X	C	β	Q	q
	mm	mm	mm	mm	mm	mm	mm	mm	mm	mm		kN/LB	kg/m
P152F51	152.4	40	36	18.5	95.5	50.8	10	175	310	110	20°	170/38242	24.9

Scraper conveyor chains
Kratzer-Förderketten

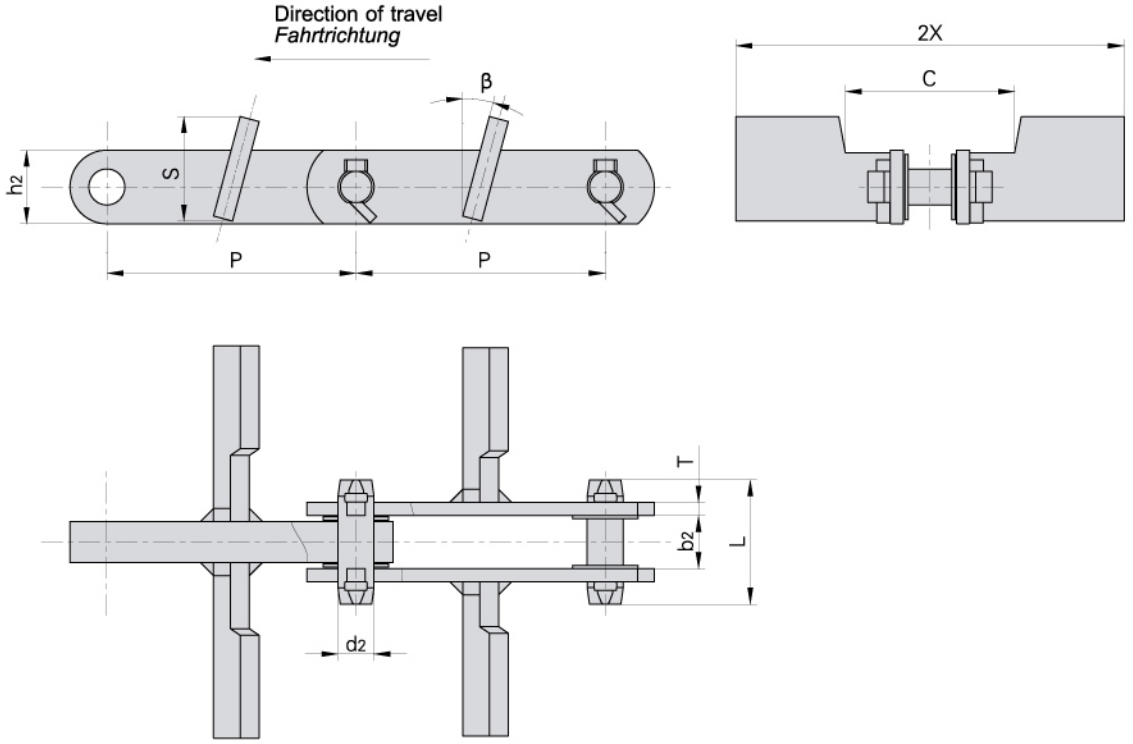

Donghua Chain No. *Donghua Ketten Nr.*	Pitch *Teilung*	Width between outer plates *Breite zwischen den Außenlaschen*	Pin diameter *Bolzendurchmesser*	Pin length *Bolzenlänge*	Plate depth *Laschenhöhe*	Plate thickness *Laschendicke*	Attachment dimension *Befestigungslaschenabmessungen*				Ultimate tensile strength *Min. Bruchkraft*	Weight per meter *Gewicht*
	P	b2	d2	L	h2	T	S	2X	C	β	Q	q
	mm	mm	mm	mm	mm	mm	mm	mm	mm		kN/LB	kg/m
P152F45	152.4	32.5	22.0	76.0	45.0	81	64.0	326	104	15°	260/58489	20.40
P152F45A	152.4	32.5	22.0	76.0	45.0	81	83.0	286	106	15°	260/58489	20.80
P152F45B	152.4	32.5	22.0	76.0	45.0	81	64.0	276	106	15°	260/58489	18.00
P152F45C	152.4	32.5	22.0	76.0	45.0	81	64.0	227	106	15°	260/58489	16.50
P152F47	152.4	34.0	22.0	85.0	45.0	12	81.0	400	106	15°	400/89983	30.90
P150F17A	150.0	25.0	18.5	66.3	38.1	10	115.0	180	90	15°	150/33743	14.50
P200F29	200.0	40.5	35.0	104.0	80.0	13	168.0	420	112	15°	530/119227	50.60
P200F29A	200.0	40.5	35.0	104.0	80.0	13	148.0	430	112	15°	530/119227	53.90
P200F35	200.0	33.0	26.5	79.0	50.0	10	145.5	430	210	15°	400/89983	28.93

Scraper conveyor chains
Kratzer-Förderketten

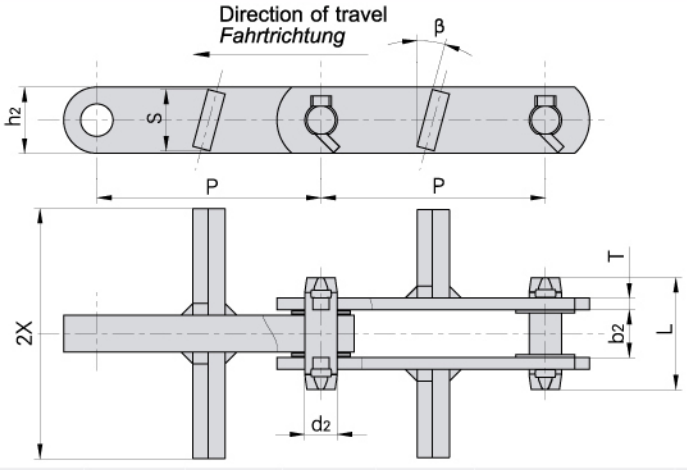

Donghua Chain No. *Donghua Ketten Nr.*	Pitch *Teilung*	Width between outer plates *Breite zwischen den Außen-laschen*	Pin diameter *Bolzen-durch-messer*	Pin length *Bolzen-länge*	Plate depth *Laschen-höhe*	Plate thickness *Laschen-dicke*	Attachment dimension *Befestigungs-laschen-abmessungen*			Ultimate tensile strength *Min. Bruchkraft*	Weight per meter *Gewicht*
	P	b2	d2	L	h2	T	S	2X	β	Q	q
	mm	mm	mm	mm	mm	mm	mm	mm		kN/LB	kg/m
P101.6F20	101.6	16.5	17.46	53.7	38.0	6	34	210	45°	100/22496	7.26
P152F2	152.4	33.3	22.00	76.5	45.0	8	38	180	20°	260/58489	12.1
P152F45D	152.4	32.5	22.00	76.0	45.0	8	42	170	15°	260/58489	13.5
P152F45E	152.4	32.5	22.00	76.0	45.0	8	42	280	15°	260/58489	16.2
P152F45F	152.4	32.5	22.00	76.0	45.0	8	42	227	15°	260/58489	14.9
P152F46	152.4	40.8	25.00	86.0	50.0	9	49	290	15°	300/67487	20.8
P150F17B	150.0	25.0	18.50	67.3	38.1	10	36	178	15°	150/33743	10.6

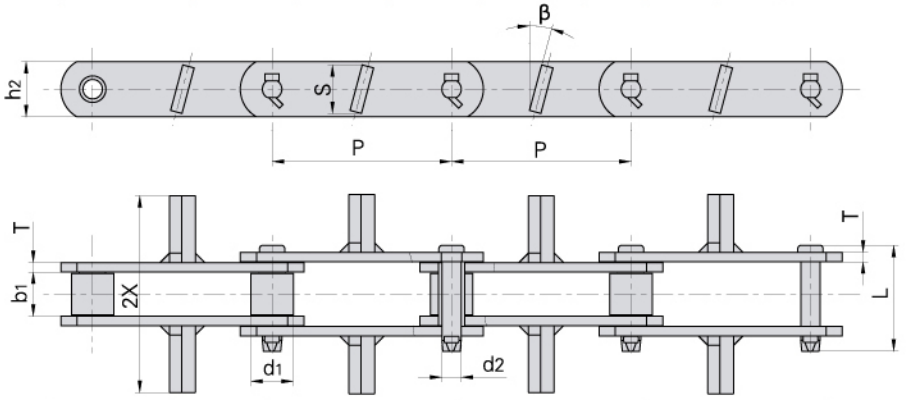

Donghua Chain No. *Donghua Ketten Nr.*	Pitch *Teilung*	Width between inner plates *Innere Breite*	Roller diameter *Rollen-durch-messer*	Pin diameter *Bolzen-durch-messer*	Pin length *Bolzen-länge*	Plate depth *Laschen-höhe*	Plate thickness *Laschen-dicke*	Attachment dimension *Befestigungs-laschen-abmessungen*			Ultimate tensile strength *Min. Bruchkraft*	Weight per meter *Gewicht*
	P	b1	d1	d2	L	h2	T	S	2X	β	Q	q
	mm	mm	mm	mm	mm	mm	mm	mm	mm		kN/LB	kg/m
P152F48	152.4	37.6	36.0	16.5	90	47	8	42	170	15°	180/40492	12.1
RO6205MF3	152.4	37.0	38.1	15.9	88	45	8	42	170	15°	170/38242	12.4

Scraper conveyor chains
Kratzer-Förderketten

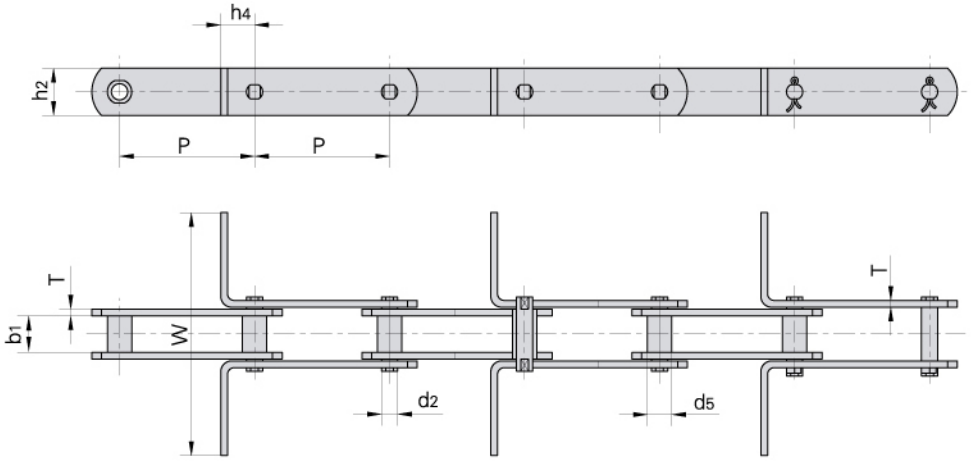

Donghua Chain No. *Donghua Ketten Nr.*	P			b_1 min	d_2 max	d_5 max	h_4	h_2 max	T max	W	Q min
	mm			mm	mm	mm	mm	mm	mm	mm	kN/LB
MR56	100	125	–	24.0	10.0	15.0	20.0	30.0	4.0	•	56.0/12727
MR80	100	125	160	28.0	12.0	18.0	25.0	35.0	5.0	•	80.0/18182
MR112	100	125	160	32.0	15.0	21.0	35.0	40.0	6.0	•	112.0/25454
MR160	100	125	160	37.0	18.0	25.0	40.0	50.0	7.0	•	160.0/36364
MR224	125	160	200	43.0	21.0	30.0	44.0	60.0	8.0	•	224.0/50909
MR315	160	200	250	48.0	25.0	36.0	50.0	70.0	10.0	•	315.0/71591

Donghua Chain No. *Donghua Ketten Nr.*	P			b_1 min	d_2 max	d_5 max	h_4	h_2 max	T max	W	Q min
	mm			mm	mm	mm	mm	mm	mm	mm	kN/LB
FVR40	80	100	125	18.0	10.0	15.0	20.0	25.0	3.0	•	42.0/9545
FVR63	100	125	160	22.0	12.0	18.0	25.0	30.0	4.0	•	64.0/14545
FVR90	100	125	160	25.0	14.0	20.0	30.0	35.0	5.0	•	100.0/22727
FVR112	100	125	160	30.0	16.0	22.0	35.0	40.0	6.0	•	120.0/27272
FVR140	125	160	200	35.0	18.0	26.0	38.0	45.0	6.0	•	145.0/32954
FVR180	125	160	200	45.0	20.0	30.0	44.0	50.0	8.0	•	190.0/43181
FVR250	160	200	250	55.0	26.0	36.0	50.0	60.0	8.0	•	275.0/62499

• dimensions upon the request of customers.
• *Die Abmessungen sind nach Kundenwunsch festzulegen.*

Scraper conveyor chains
Kratzer-Förderketten

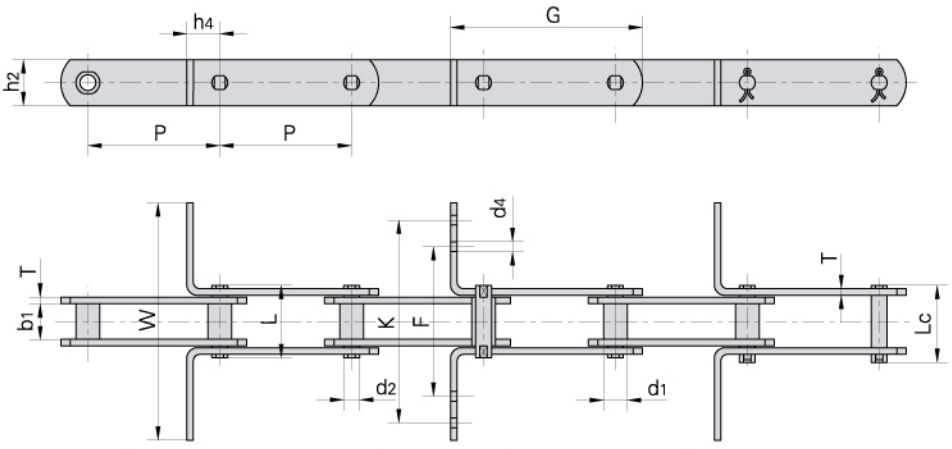

Donghua Chain No. *Donghua Ketten Nr.*	Pitch *Teilung*	Bush diameter *Buchsen-durch-messer*	Width between inner plates *Innere Breite*	Pin diameter *Bolzen-durch-messer*	Pin length *Bolzen-länge*		Ultimate tensile strength *Min. Bruchkraft*	Average tensile strength *Durchschn. Bruchkraft*	Weight per meter *Gewicht*
	P	d_1 max	b_1 min	d_2 max	L max	Lc max	Q min	Q_0	q
	mm	mm	mm	mm	mm	mm	kN/LB	kN	kg/m
M80–P100F1	100.0	18.0	28.00	12.00	55.0	58.5	80.0/18162	88.0	5.19
M180–P–100	100.0	26.0	28.85	18.00	62.5	–	180.0/40909	198.0	10.25
M310–P–125	125.0	40.0*	52.00	20.00	103.4	109.4	303.8/69045	334.0	19.88
M310F1–P–125	125.0	40.0*	52.00	20.00	103.4	109.4	303.8/69045	334.0	24.88
M310F1–P–150	150.0	40.0*	52.00	20.00	103.4	109.4	303.8/69045	334.0	19.13
FVR90F1–B–125	125.0	20.0	25.00	14.00	52.0	56.4	150.0/33743	165.0	6.16
P100F16	100.0	23.0	28.00	16.00	66.0	–	115.0/26136	127.0	6.60
P101.6	101.6	44.5	50.80	23.84	136.5	–	600.0/136362	660.0	34.96
P125F3	125.0	25.0	36.00	18.00	82.0	–	220.0/49999	242.0	11.17
P125F4	125.0	25.0	36.00	18.00	82.0	–	220.0/49999	242.0	9.83
P160F12	160.0	50.0*	34.00	20.00	77.8	–	160.0/35993	176.0	10.30

Donghua Chain No. *Donghua Ketten Nr.*	G	F	W	K	h_4	h_2	d_4	T
	mm	mm	mm	mm	mm	mm	mm	mm
M80–P100F1	145.5	–	180.0	–	25.0	35.0	–	5.0
M180–P–100	163.0	–	185.0	–	35.0	50.0	–	6.0
M310–P–125	195.0	–	270.0	–	35.0	55.0	–	10.0
M310F1–P–125	195.0	–	560.0	–	35.0	55.0	–	10.0
M310F1–P–150	220.0	–	350.0	–	40.0	50.0	–	10.0
FVR90F1–B–125	175.0	90.0	290.0	270.0	30.0	40.0	9.0	5.0
P100F16	143.0	91.8	180.0	159.8	25.0	36.0	6.5	6.0
P101.6	198.6	–	206.5	–	62.0	60.0	–	14.5
P125F3	190.0	139.5	290.0	259.5	35.0	51.0	8.5	6.0
P125F4	190.0	119.5	220.0	191.5	35.0	51.0	8.5	6.0
P160F12	230.0	–	214.5	–	40.0	50.0	–	6.0

* Indicate the external diameter of roller
* *Außendurchmesser der Rollen*

WELDED STEEL CHAINS
GESCHWEISSTE ROTARYKETTEN

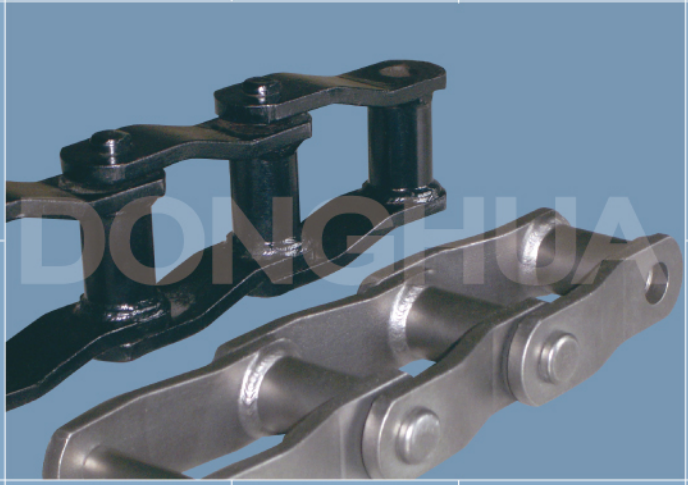

Welded steel chains
Geschweißte Rotaryketten



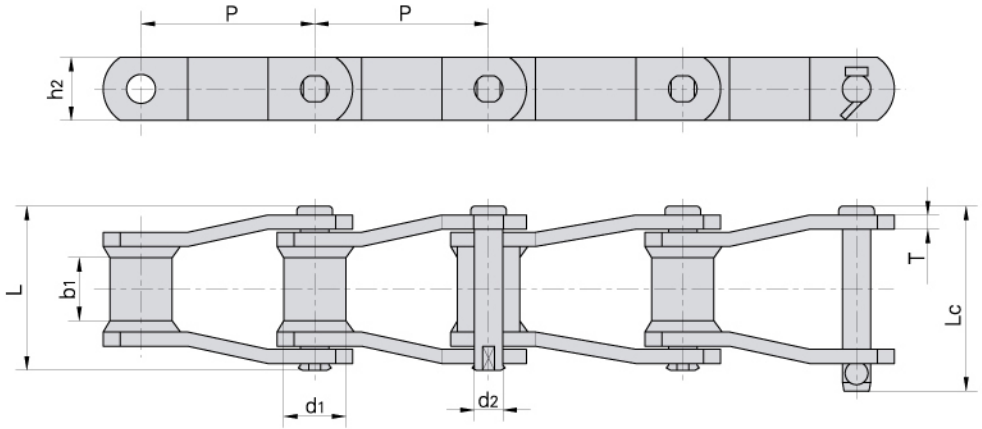

Donghua Chain No. *Donghua Ketten Nr.*	Pitch *Teilung*	Bush diameter *Buchsen-durch-messer*	Width between inner plates *Innere Breite*	Pin diameter *Bolzen-durch-messer*	Pin length *Bolzen-länge*		Plate depth *Laschen-höhe*	Plate thickness *Laschen-dicke*	Ultimate tensile strength *Min. Bruchkraft*	Average tensile strength *Durchschn. Bruchkraft*	Weight per meter *Gewicht*
	P	d_1 max	b_1 min	d_2 max	L max	Lc max	h_2 max	T	Q min	Q_0	q
	mm	mm	mm	mm	mm	mm	mm	mm	kN/LB	kN	kg/m
WR78 WH78	66.27	22.9	28.4	12.78	73.0	79.3	28.4	6.4	93.4/21227 106.8/24273	102.7 117.5	6.20
WR82 WH82	78.10	31.5	31.8	14.35	80.0	86.0	31.8	6.4	100.1/22750 131.2/29818	110.1 144.3	7.98
WR106 WH106	152.40	37.1	41.2	19.13	103.0	111.0	38.1	9.7	169.0/38409 224.6/51045	185.9 247.0	10.56
WR110 WH110	152.40	32.0	46.7	19.13	107.7	115.5	38.1	9.7	169.0/38409 224.6/51045	185.9 247.0	10.40
WR111 WH111	120.90	37.1	57.2	19.13	116.8	124.5	38.1	9.7	169.0/38409 224.6/51045	185.9 247.0	12.72
WR124 WH124	101.60	37.1	41.2	19.13	103.0	110.0	38.1	9.7	169.0/38409 224.6/51045	185.9 247.0	12.38
WR124H WH124H	103.20	41.7	41.2	22.30	131.6	133.0	50.8	12.7	275.8/62682 355.9/80886	303.3 391.4	19.68
WR132 WH132	153.67	44.7	76.2	25.48	151.0	162.2	50.8	12.7	275.8/62682 378.1/85932	303.3 415.9	20.00
WR150 WH150	153.67	44.45	73.0	25.40	151.0	162.2	63.5	12.7	620/140907	682	20.50
WR155 WH155	153.67	44.45	73.0	28.57	164.0	176.0	63.5	12.7	820/186361	902	20.70
WR157 WH157	153.67	44.45	76.2	28.57	164.0	176.0	63.5	15.9	820/186361	902	20.80

Note: WR - Welded steel chain c/w heat treated pins & bushings
WH - Welded steel chain - fully heat treated
Hinweis: WR – Wärmebehandlung nur für Bolzen und Buchsen
WH – Wärmebehandlung für alle Teilen

Welded steel chain with attachments
Befestigungslaschen für geschweißte Rotaryketten

With K1 attachments
Mit K1 Befestigungslaschen

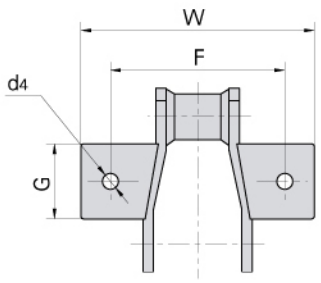

With A1 attachments
Mit A1 Befestigungslaschen

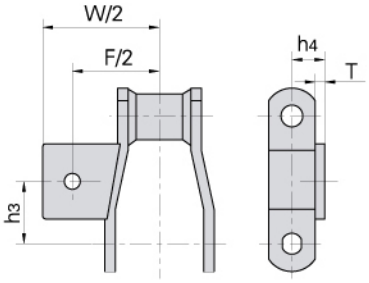

Donghua Chain No. *Donghua Ketten Nr.*	h3	G	F	W	h4	d4	T
	mm	mm	mm	mm	mm	mm	mm
WR78 WH78	31.8	36.6	101.6	130.0	22.4	9.7	6.4
WR82 WH82	38.1	46.0	106.7	142.7	23.9	9.7	6.4

With K2 attachments
Mit K2 Befestigungslaschen

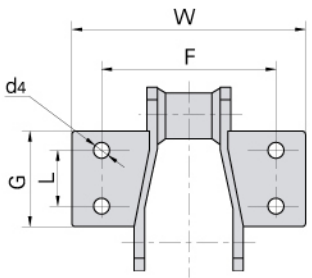

With A2 attachments
Mit A2 Befestigungslaschen

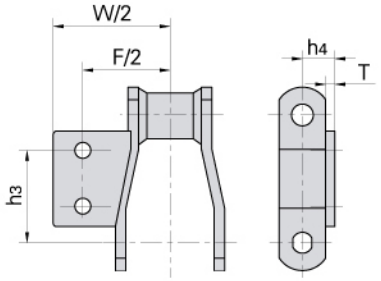

Donghua Chain No. *Donghua Ketten Nr.*	L	G	h3	F	W	h4	d4	T
	mm	mm	mm	mm	mm	mm	mm	mm
WR78 WH78	28.4	52.3	38.9	101.6	130.0	22.4	9.7	6.4
WR82 WH82	33.3	62.0	52.3	108.2	142.7	23.9	9.7	6.4
WR110 WH110	44.4	84.1	98.6	135.1	168.1	30.0	9.7	9.7
WR111 WH111	58.7	90.4	89.9	159.0	193.5	30.0	12.7	9.7
WR124								

Welded steel chain with attachments
Befestigungslaschen für geschweißte Rotaryketten

With F2 attachments
Mit F2 Befestigungslaschen

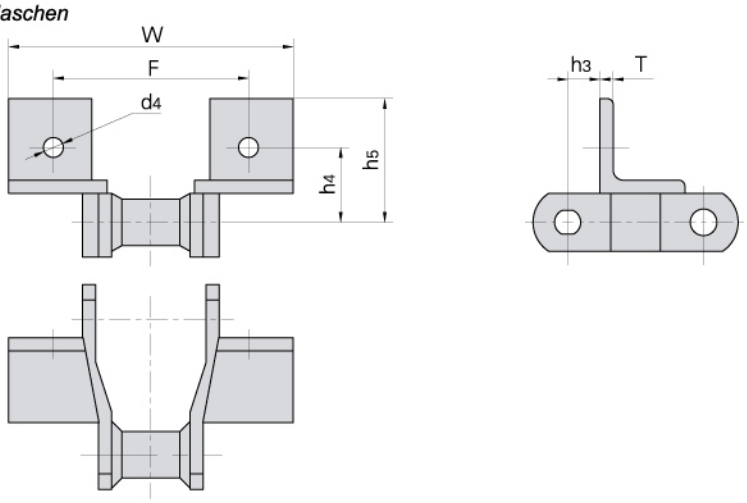

Donghua Chain No. / *Donghua Ketten Nr.*	h_3	h_4	h_5	F	W	d_4	T
	mm	mm	mm	mm	mm	mm	mm
WR78 WH78	15.7	36.6	60.5	95.5	138.2	9.7	6.4

With F4 attachments
Mit F4 Befestigungslaschen

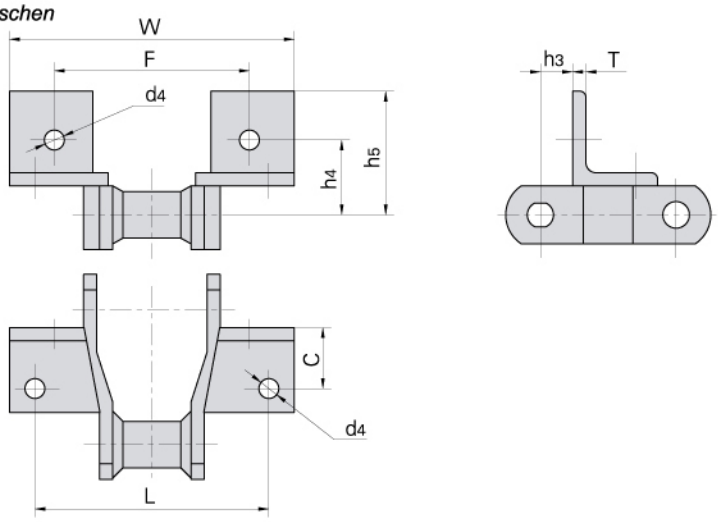

Donghua Chain No. / *Donghua Ketten Nr.*	h_3	h_4	h_5	L	C	F	W	d_4	T
	mm	mm	mm	mm	mm	mm	mm	mm	mm
WR78 WH78	17.3	44.4	60.5	114.3	31.8	95.2	141.2	9.7	6.4
WR82 WH82	20.6	46.2	62.0	127.0	28.4	104.6	150.9	9.7	6.4
WR124 WH124	22.4	52.3	73.2	133.6	36.6	111.3	157.0	9.7	9.7

Welded steel chain with attachments
Befestigungslaschen für geschweißte Rotaryketten

With R1 & RR1 attachments
Mit R1 & RR1 Befestigungslaschen

R1

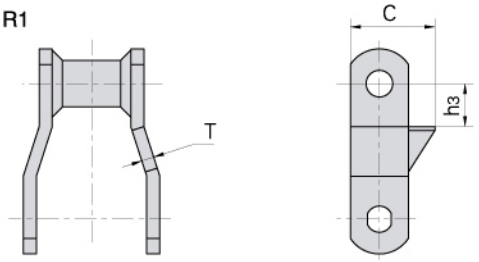

RR1

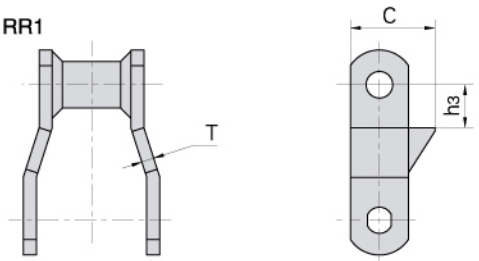

Donghua Chain No. *Donghua Ketten Nr.*	h3	C	T
	mm	mm	mm
WR78 WH78	17.3	41.1	6.4
WR82 WH82	22.4	49.3	6.4
WR124 WH124	31.8	49.3	9.7

With R2 & RR2 attachments
Mit R2 & RR2 Befestigungslaschen

R2

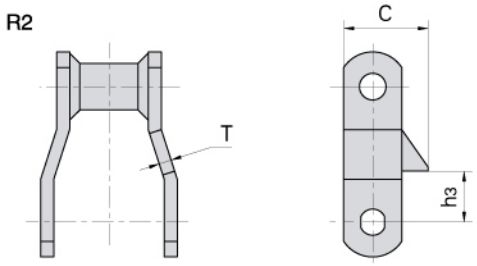

RR2

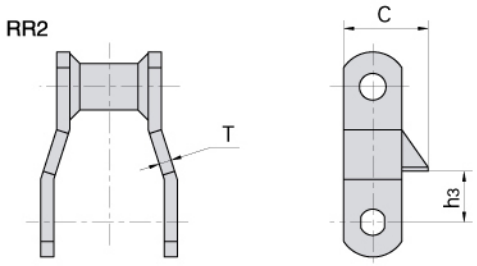

Donghua Chain No. *Donghua Ketten Nr.*	h3	C	T
	mm	mm	mm
WR78 WH78	17.3	41.1	6.4
WR82 WH82	22.4	49.3	6.4
WR124 WH124	31.8	49.3	9.7

With W1 attachments
Mit W1 Befestigungslaschen

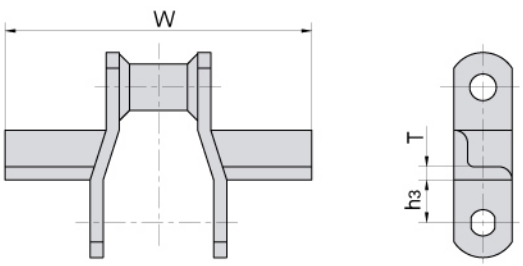

Donghua Chain No. *Donghua Ketten Nr.*	h3	W	T
	mm	mm	mm
WR78 WH78	19.1	153.9	6.4
WR82 WH82	23.9	166.6	6.4
WR124 WH124	30.0	217.4	6.4
WR124H WH124H	35.1	217.4	9.7
WR132 WH132	38.1	316.0	9.7

Steel pintle chains
Stahlbolzenketten



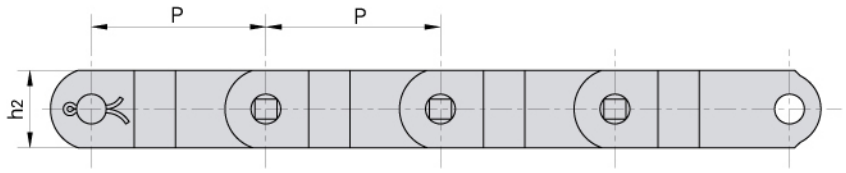

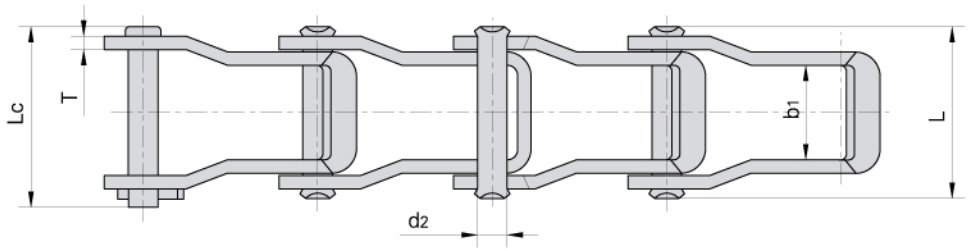

Donghua Chain No. *Donghua Ketten Nr.*	Pitch *Teilung* P mm	Width between inner plates *Innere Breite* b_1 min mm	Pin diameter *Bolzen-durch-messer* d_2 max mm	Pin length *Bolzen-länge* L max mm	 Lc max mm	Plate depth *Laschen-höhe* h_2 max mm	Plate thickness *Laschen-dicke* T mm	Ultimate tensile strength *Min. Bruchkraft* Q min kN/LB	Average tensile strength *Durchschn. Bruchkraft* Q_0 kN	Weight per meter *Gewicht* q kg/m
662	42.27	22.9	7.19	41.2	44.2	18.8	3.2	37.80/8591	41.5	1.63
667H	58.75	25.4	7.94	43.7	46.7	22.2	3.2	42.30/9614	46.5	1.87
667X	57.15	26.6	11.10	50.2	55.0	23.8	4.3	66.70/15159	73.3	2.98
667XH	57.15	27.4	11.91	58.0	62.0	27.3	5.7	124.50/28295	136.9	4.34
667K	57.15	27.4	11.10	55.5	60.0	27.3	5.1	89.00/20227	97.9	3.91
667J	57.15	26.6	9.53	50.2	55.0	27.3	4.3	62.28/14155	68.5	2.81
88K	66.27	27.4	11.10	55.5	60.0	27.3	5.1	89.00/20227	97.9	3.73
88C	66.27	31.4	12.70	64.6	69.0	28.9	6.4	133.36/30309	146.6	5.17

Steel pintle chain with attachments
Anbauteile für Stahlbolzenketten

With C1 attachments
Mit C1 Befestigungslaschen

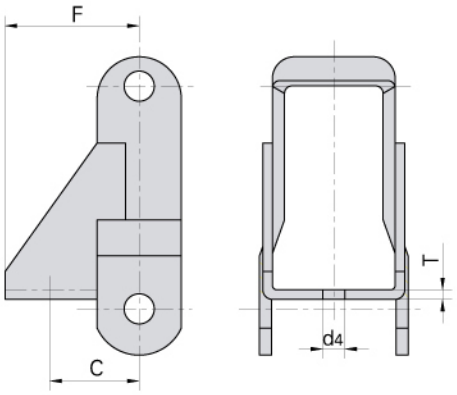

Donghua Chain No. *Donghua Ketten Nr.*	C	F	d4	T
	mm	mm	mm	mm
662	22.9	37.2	7.00	2.8
667H	25.4	38.9	7.00	4.8
667X	29.5	39.7	7.00	4.8

With AS attachments
Mit AS Befestigungslaschen

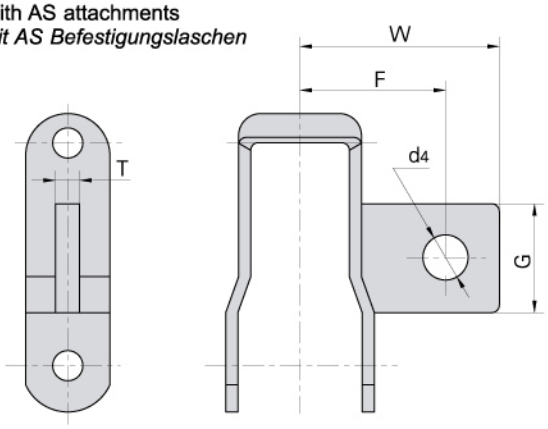

Donghua Chain No. *Donghua Ketten Nr.*	G	F	W	d4	T
	mm	mm	mm	mm	mm
662	24.2	35.9	48.4	7.00	4.3
667H	29.7	51.6	66.6	8.50	6.4
667X	29.7	51.6	69.0	8.50	7.9
667K	32.5	51.6	72.2	10.00	9.5
88K	32.5	51.6	72.2	10.00	9.5

With A22 attachments
Mit A22 Befestigungslaschen

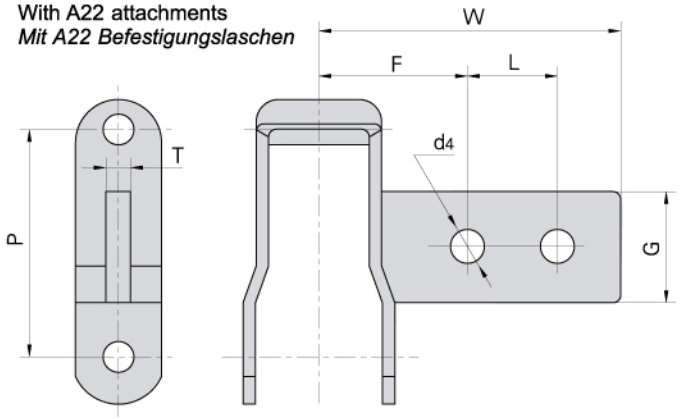

Donghua Chain No. *Donghua Ketten Nr.*	P	G	F	L	W	d4	T
	mm	mm	mm	mm	mm	mm	mm
662	42.27	24.2	34.9	15.9	60.3	6.75	4.3
88C	66.27	32.5	54.0	63.5	136.5	9.92	9.5
88K	66.27	32.5	54.0	63.5	136.5	9.92	9.5

With AN attachments
Mit AN Befestigungslaschen

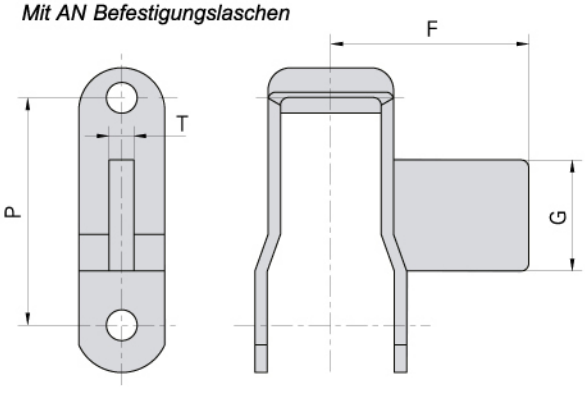

Donghua Chain No. *Donghua Ketten Nr.*	P	G	F	T
	mm	mm	mm	mm
662	42.27	24.2	47.6	4.3
667H	58.75	29.7	69.0	6.4
667X	57.15	29.7	68.3	7.9
667K	57.15	32.5	68.3	9.5
88K	66.27	32.5	68.3	9.5

Steel pintle chain with attachments
Anbauteile für Stahlbolzenketten

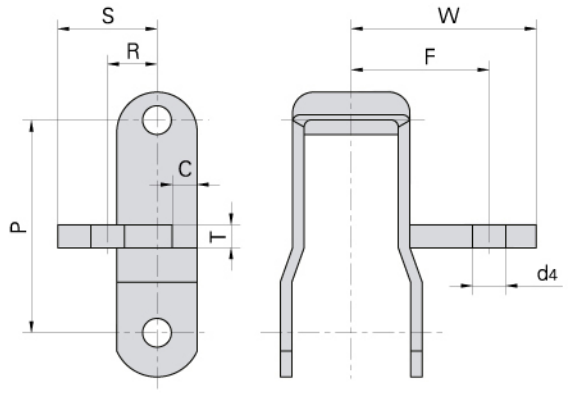

Donghua Chain No. / *Donghua Ketten Nr.*	Attachment No. / *Befestigungs-laschen Nr.*	P	R	S	F	W	d4	T	C
		mm	mm	mm	mm	mm	mm	mm	mm
662	G28	42.27	20.6	33.3	31.8	43.7	6.75	6.4	4.8
662	G30	42.27	19.1	33.3	33.3	48.0	8.33	6.4	4.8
662	G30S	42.27	19.1	33.3	33.3	48.0	8.73	6.4	4.8
667H	G27S	58.75	19.1	31.8	51.6	65.9	9.92	6.4	6.4

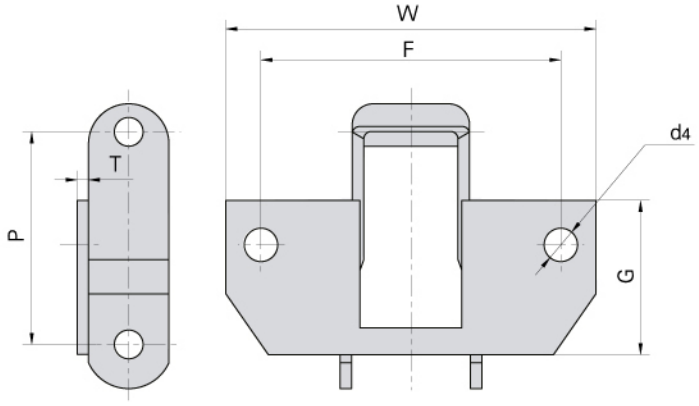

Donghua Chain No. / *Donghua Ketten Nr.*	Attachment No. / *Befestigungs-laschen Nr.*	P	G	F	W	d4	T
		mm	mm	mm	mm	mm	mm
662	K1	42.27	34.9	62.7	82.6	6.75	3.2
662	K19	42.27	34.9	50.8	71.4	6.75	3.2
667X	K1	57.15	34.9	62.7	82.6	6.75	3.2
667H	K1	58.75	34.9	62.7	82.6	6.75	3.2

Steel pintle chain with attachments
Anbauteile für Stahlbolzenketten

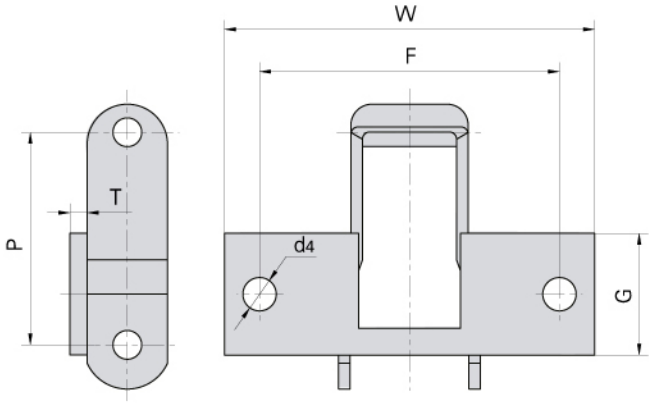

Donghua Chain No. / *Donghua Ketten Nr.*	Attachment No. / *Befestigungs-laschen Nr.*	P	G	F	W	d4	T
		mm	mm	mm	mm	mm	mm
88K	K1C	66.27	47.6	95.3	127.0	9.92	4.8
88K	K1M	66.27	47.6	101.6	127.0	9.92	4.8
88K	K1P	66.27	47.6	96.8	127.0	9.92	4.8

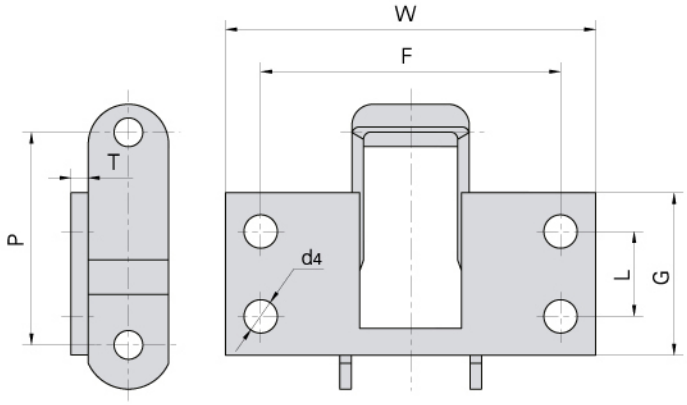

Donghua Chain No. / *Donghua Ketten Nr.*	Attachment No. / *Befestigungs-laschen Nr.*	P	L	G	F	W	d4	T
		mm	mm	mm	mm	mm	mm	mm
88K	K2C	66.27	31.8	57.2	106.4	127.0	9.92	4.8
88K	K2M	66.27	31.8	57.2	101.6	127.0	9.92	4.8
88K	K2P	66.27	31.8	57.2	92.0	127.0	9.92	4.8

Conveyor chains for fibreboard equipment
Förderketten für Anlagen zur Herstellung der Furnierholzplatten.

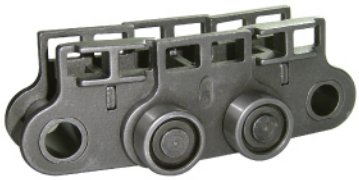

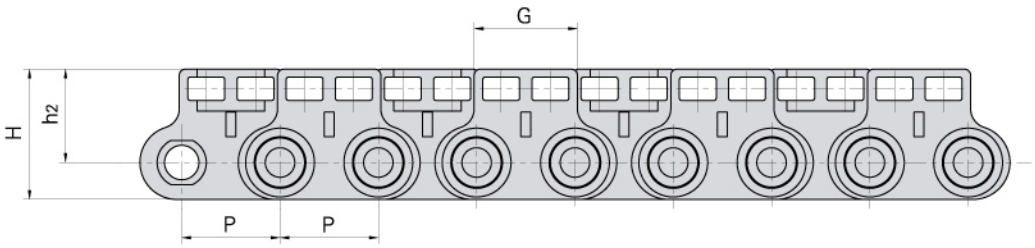

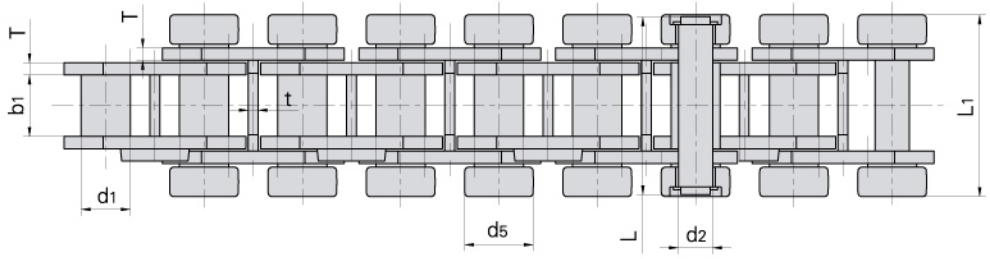

Donghua Chain No. *Donghua Ketten Nr.*	P	G	L_1	h_2	d_5	t
	mm	mm	mm	mm	mm	mm
P40	40.0	42.0	75.0	38.0	28.0	4.0

Donghua Chain No. *Donghua Ketten Nr.*	Pitch *Teilung*	Bush diameter *Buchsen-durch-messer*	Width between inner plates *Innere Breite*	Pin diameter *Bolzen-durch-messer*	Pin length *Bolzen-länge*	Plate depth *Laschen-höhe*	Plate thickness *Laschen-dicke*	Ultimate tensile strength *Min. Bruchkraft*	Weight per meter *Gewicht*
	P	d_1 max	b_1 min	d_2 max	L max	H max	T max	Q min	q
	mm	mm	mm	mm	mm	mm	mm	kN/LB	kg/m
P40	40.0	20.0	25.0	14.0	73.0	53.0	5.0	90.0/20250	10.67

Conveyor chains for crawler asphalt paver
Förderketten für den Straßenbau

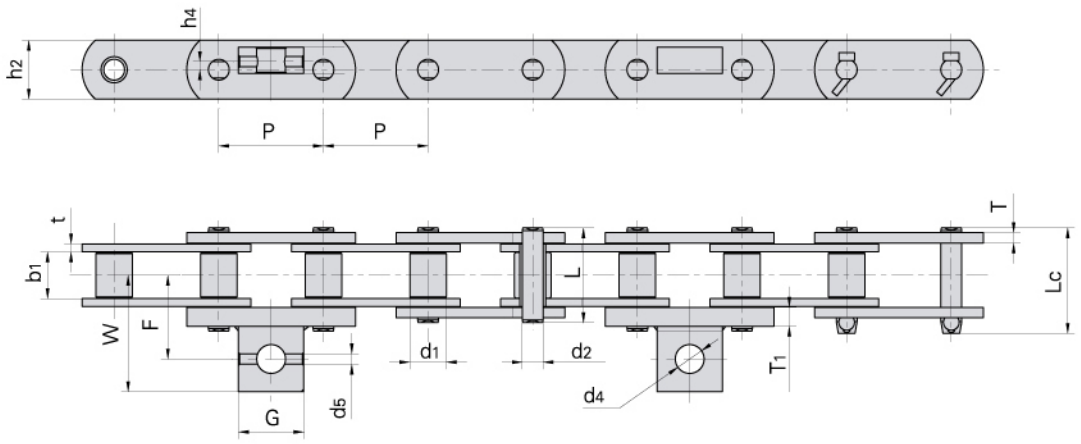

Donghua Chain No. *Donghua Ketten Nr.*	P	F	W	G	h4	d4	d5	T1
	mm	mm	mm	mm	mm	mm	mm	mm
P80F7	80.0	56.4	81.4	50.5	5.0	21.0	8.2	6.2
P80F8	80.0	63.0	88.0	50.0	2.0	22.0	10.2	14.2
P80F17	80.0	66.3	91.3	50.0	7.5	24.0	–	15.0
P80F19	80.0	56.5	81.5	50.0	2.8	22.0	8.0	20.0
P80F21	80.0	57.0	82.0	50.0	7.0	21.5	–	15.0

Donghua Chain No. *Donghua Ketten Nr.*	Pitch *Teilung*	Roller diameter *Rollen-durch-messer*	Width between inner plates *Innere Breite*	Pin diameter *Bolzen-durch-messer*	Pin length *Bolzen-länge*		Plate depth *Laschen-höhe*	Plate thickness *Laschen-dicke*	Ultimate tensile strength *Min. Bruchkraft*	Weight per meter *Gewicht*
	P	d1 max	b1 min	d2 max	L max	Lc max	h2 max	t/T max	Q min	q
	mm	mm	mm	mm	mm	mm	mm	mm	kN/LB	kg/m
P80F7	80.0	35.76	35.3	18.00	72.0	76.7	46.00	7.0/6.2	95.0/21370	11.91
P80F8	80.0	27.94	33.8	15.90	68.4	76.0	44.45	6.0/8.0	190.0/42741	10.80
P80F17	80.0	36.00	35.3	18.00	81.0	81.5	45.00	6.0/5.0	195.0/43866	12.90
P80F19	80.0	27.94	33.8	15.90	68.4	75.8	45.00	6.0/8.0	190.0/42741	11.20
P80F21	80.0	27.94	34.0	15.90	78.4	–	45.00	6.0/8.0	190.0/42741	10.70

Conveyor chains for crawler asphalt paver
Förderketten für den Straßenbau

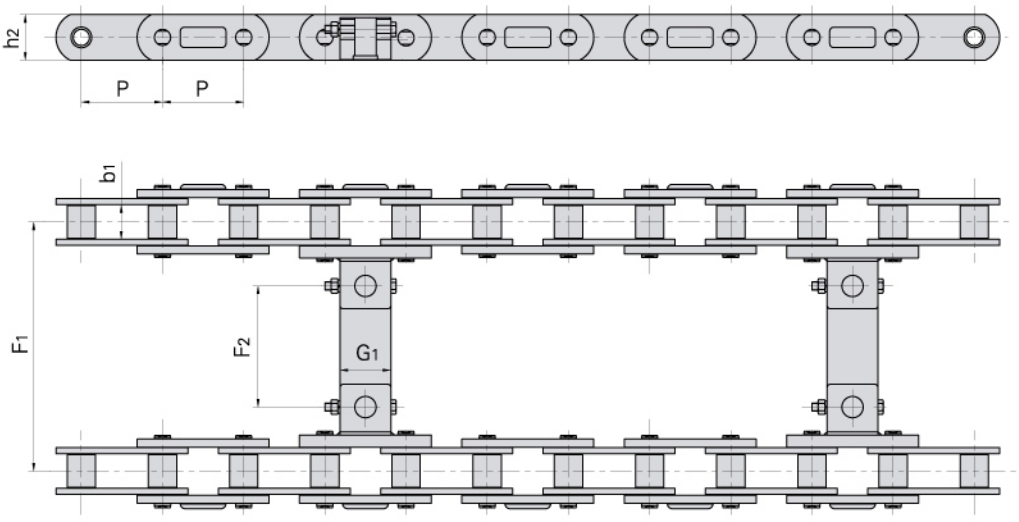

Donghua Chain No. *Donghua Ketten Nr.*	P mm	b_1 mm	h_2 mm	F_1 mm	F_2 mm	G_1 mm
P80F8	80.0	33.8	45.0	575.0	449.0	50.0
P80F17	80.0	35.3	45.0	575.0	442.4	50.0





PALM OIL CHAINS
KETTEN FÜR DIE PALMÖLINDUSTRIE



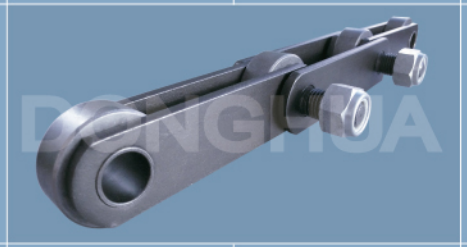

Palm oil chains
Ketten für die Palmölindustrie

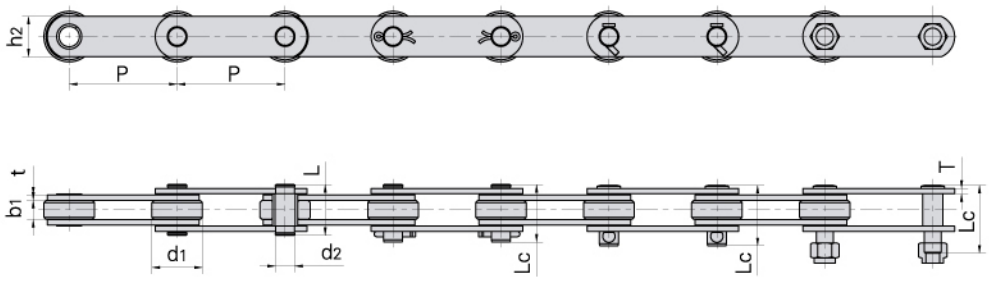

Donghua Chain No. *Donghua Ketten Nr.*	Pitch *Teilung* P mm	Roller diameter *Rollen-durch-messer* d1 max mm	Width between inner plates *Innere Breite* b1 min mm	Plate depth *Laschen-höhe* h2 max mm	Pin diameter *Bolzen-durch-messer* d2 max mm	Pin length *Bolzen-länge* L max mm	Pin length Lc max mm	Plate thickness *Laschen-dicke* t/T max mm	Ultimate tensile strength *Min. Bruchkraft* Q min kN/LB	Average tensile strength *Durchschn. Bruchkraft* Q0 kN	Weight per meter *Gewicht* q kg/m
P101.6F2	101.6	47.6	18.2	38.1	19.10	48.0	65.0	5.0	97.8/22000	107.58	6.75
P152F14	152.4	47.6	18.2	38.1	19.10	48.0	52.0/50.5	5.0	89/20000	97.90	5.66
P152F17	152.4	66.7	25.4	50.8	27.00	67.5	88.5	8.0	163.3/36000	179.60	12.83
P152F29	152.4	66.7	25.4	50.8	27.00	69.5	111.5	9.0/8.0	200/45000	220.00	13.54
90R–S	101.6	47.6	21.4	31.8	11.32	–	55.7	4.8	80.36/18070	88.40	5.90
P101.6F64	101.6	50.8	30.0	38.1	14.50	–	69.0	6.3	132.7/29850	146.00	7.30
P76.7	76.7	29.0	30.0	38.1	14.50	–	73.0	6.3	100/25000	110.00	8.25
P152F31	152.4	88.9	38.1	61.0	31.80	–	98.5	10.0	266.72/60000	293.00	26.60

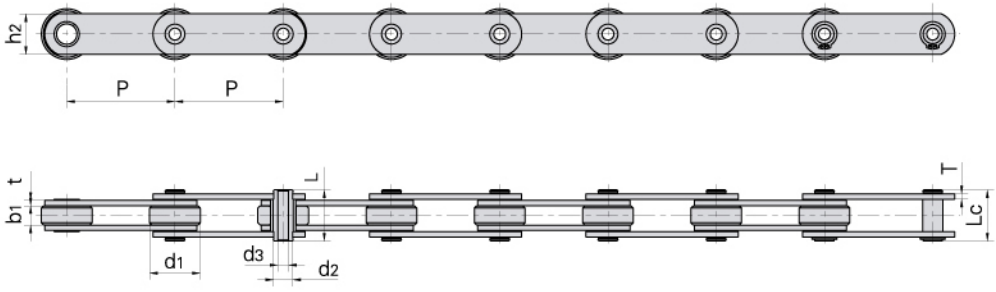

Donghua Chain No. *Donghua Ketten Nr.*	Pitch *Teilung* P mm	Roller diameter *Rollen-durch-messer* d1 max mm	Width between inner plates *Innere Breite* b1 min mm	Plate depth *Laschen-höhe* h2 max mm	Pin diameter *Bolzen-durch-messer* d2 max mm	Pin diameter d3 min mm	Pin length *Bolzen-länge* L max mm	Pin length Lc max mm	Plate thickness *Laschen-dicke* t/T max mm	Ultimate tensile strength *Min. Bruchkraft* Q min kN/LB	Average tensile strength *Durchschn. Bruchkraft* Q0 kN	Weight per meter *Gewicht* q kg/m
P152F3	152.4	66.7	25.4	50.8	27.0	20.1	65.5	67.0	8.0	163.3/36000	179.6	11.73

SUGAR CHAINS
KETTEN FÜR DIE ZUCKERINDUSTRIE





Sugar chains
Ketten für die Zuckerindustrie (Zuckerrohr-Förderketten)

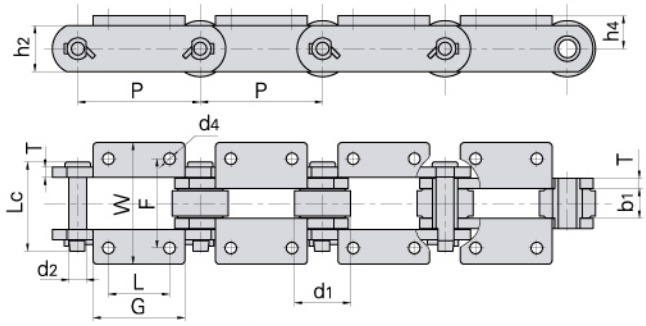

Donghua Chain No. *Donghua Ketten Nr.*	P	G	L	F	W	h4	d4
	mm	mm	mm	mm	mm	mm	mm
DH 9063	152.4	114.3	76.2	111.13	165.86	44.45	14.3
DH 2198	152.4	114.3	76.2	111.25	152.40	41.40	14.3

Donghua Chain No. *Donghua Ketten Nr.*	Pitch *Teilung*	Roller diameter *Rollen-durch-messer*	Width between inner plates *Innere Breite*	Pin diameter *Bolzen-durch-messer*	Pin length *Bolzen-länge*	Plate depth *Laschen-höhe*	Plate thickness *Laschen-dicke*	Ultimate tensile strength *Min. Bruchkraft*	Average tensile strength *Durchschn. Bruchkraft*	Weight per meter *Gewicht*
	P	d_1 max	b_1 min	d_2 max	Lc max	h_2 max	T max	Q min	Q_0	q
	mm	mm	mm	mm	mm	mm	mm	kN/LB	kN	kg/m
DH 9063	152.4	76.20	38.1	23.83	103.2	61.00	10.3	445.0/100000	489.0	27.5
DH 2198	152.4	69.85	38.1	22.23	111.2	57.15	12.7	404.5/91000	445.0	27.9

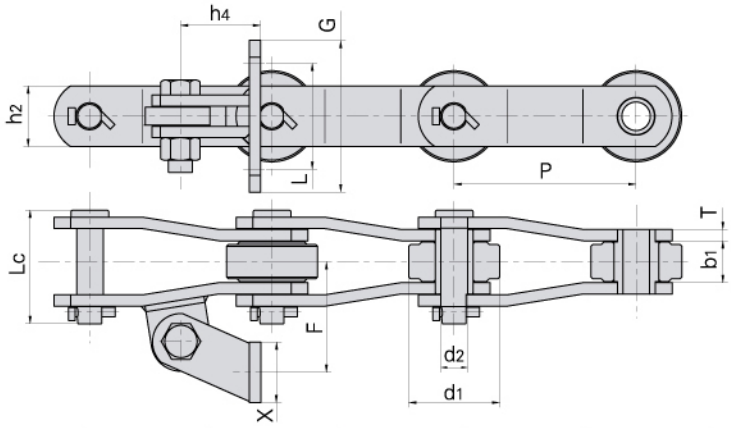

Donghua Chain No. *Donghua Ketten Nr.*	P	G	L	F	X	h4
	mm	mm	mm	mm	mm	mm
DH 09060	152.4	114.3	82.6	88.9	50.8	111.25
DH 1796	152.4	114.3	82.6	88.9	50.8	111.25

Donghua Chain No. *Donghua Ketten Nr.*	Pitch *Teilung*	Roller diameter *Rollen-durch-messer*	Width between inner plates *Innere Breite*	Pin diameter *Bolzen-durch-messer*	Pin length *Bolzen-länge*	Plate depth *Laschen-höhe*	Plate thickness *Laschen-dicke*	Ultimate tensile strength *Min. Bruchkraft*	Average tensile strength *Durchschn. Bruchkraft*
	P	d_1 max	b_1 min	d_2 max	Lc max	h_2 max	T max	Q min	Q_0
	mm	mm	mm	mm	mm	mm	mm	kN/LB	kN
DH 09060	152.4	69.85	38.1	19.05	96.6	50.80	9.65	270/60740	297.0
DH 1796	152.4	69.85	38.1	22.35	100.0	57.15	9.65	445/100100	489.5

Flat-top conveyor chains
Scharnierbandketten

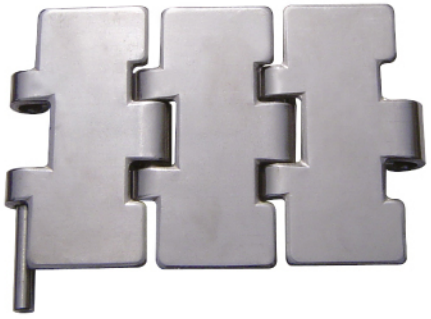

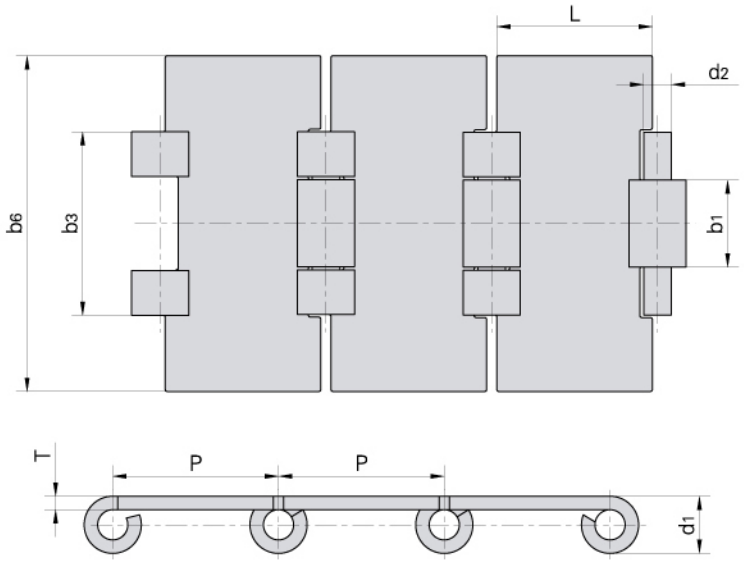

Donghua Chain No. *Donghua Ketten Nr.*	P	b6 max	d1 max	d2 max	T max	L	b1 max	b3 max	Ultimate tensile strength *Min. Bruchkraft* Material 1Cr18Ni9Ti	Ultimate tensile strength *Min. Bruchkraft* *Material* 1Cr13 2Cr13	Weight per meter *Gewicht*
	mm	mm	mm	mm	mm	mm	mm	mm	kN min	kN min	kg/m
C12S		76.2									2.39
C13S		82.6									2.55
C14S		88.9									2.70
C16S	38.1	101.6	13.13	6.38	3.35	37.28	20	42.05	8.00	6.25	2.99
C18S		114.3									3.29
C24S		152.4									4.17
C30S		190.5									5.06

Flat-top conveyor chains
Scharnierbandketten



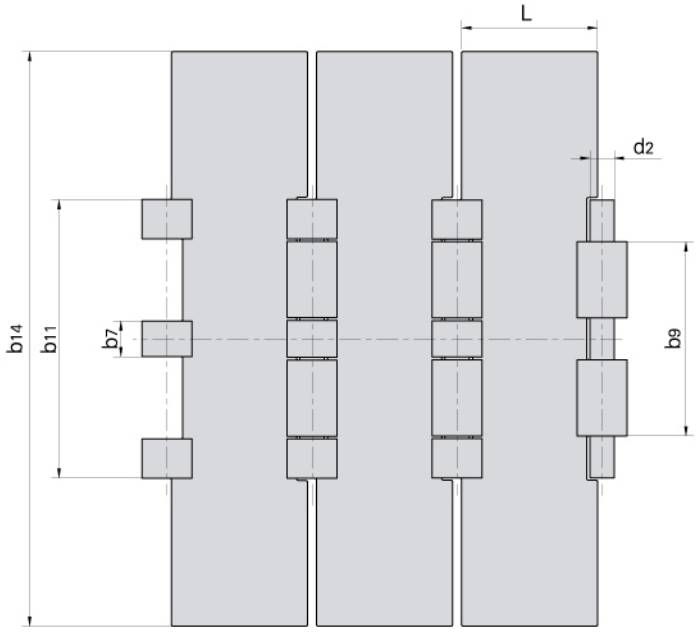

Donghua Chain No. *Donghua Ketten Nr.*	P	b_{14} max	d_1 max	d_2 max	T max	L	b_9 max	b_{11} max	Ultimate tensile strength *Min. Bruchkraft* Material 1Cr18Ni9Ti	Material 1Cr13 2Cr13	Weight per meter *Gewicht*
	mm	mm	mm	mm	mm	mm	mm	mm	kN min	kN min	kg/m
C30D	38.1	190.5	13.13	6.38	3.35	13.5	53.5	80.5	16.00	12.50	5.87





STAINLESS STEEL CHAINS

ROLLENKETTEN AUS ROSTFREIEM STAHL

Stainless steel roller chains
Rollenketten aus rostfreiem Stahl

Stainless steel chains are suitable for corrosive conditions involving food,chemicals pharmaceuticals,etc.also suitable for high and low temperature conditions

Rollenketten aus rostfreiem Stahl sind geeignet für Anwendungen in der korrosiven Umgebung, z.B. durch Lebensmittel, Chemikalien, Medikamente etc. Sie sind auch geeignet für Anwendungen in der Umgebung der Hoch- und Niedrigtemperaturen.

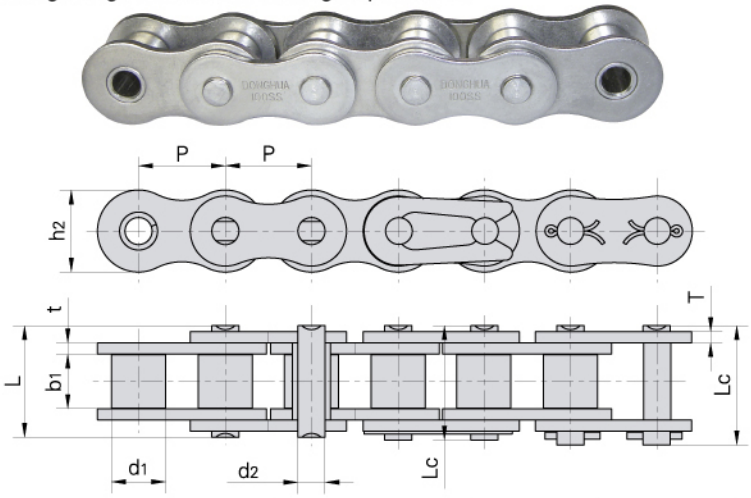

Donghua Chain No. *Donghua Ketten Nr.*	Pitch *Teilung*	Roller diameter *Rollen-durch-messer*	Width between inner plates *Innere Breite*	Pin diameter *Bolzen-durch-messer*	Pin length *Bolzen-länge*		Inner plate depth *Innen-laschen-höhe*	Plate thickness *Laschen-dicke*	Breaking load *Min. Bruchkraft*	Weight per meter *Gewicht*
	P	d_1 max	b_1 min	d_2 max	L max	Lc max	h_2 max	t/T max	Q	q
	mm	mm	mm	mm	mm	mm	mm	mm	kN/LB	kg/m
*25SS	6.350	3.30	3.18	2.31	7.9	8.40	6.00	0.80	2.5/568	0.15
*35SS	9.525	5.08	4.77	3.58	12.4	13.17	9.00	1.30	5.5/1250	0.33
40SS	12.700	7.95	7.85	3.96	16.6	17.80	12.00	1.50	9.6/2182	0.63
41SS	12.700	7.77	6.25	3.58	13.75	15.00	9.91	1.30	6.0/1360	0.46
50SS	15.875	10.16	9.40	5.08	20.7	22.20	15.09	2.03	15.2/3455	1.03
60SS	19.050	11.91	12.57	5.94	25.9	27.70	18.00	2.42	21.7/4932	1.51
80SS	25.400	15.88	15.75	7.92	32.7	35.00	24.00	3.25	38.9/8841	2.62
100SS	31.750	19.05	18.90	9.53	40.4	44.70	30.00	4.00	60.0/13636	3.94
120SS	38.100	22.23	25.22	11.10	50.3	54.30	35.70	4.80	72.5/16477	5.72
140SS	44.450	25.40	25.22	12.70	54.4	59.00	41.0	5.60	94.0/21363	7.70
04BSS	6.000	4.00	2.80	1.85	6.80	7.80	5.00	0.60	2.0/455	0.11
05BSS	8.000	5.00	3.00	2.31	8.20	8.90	7.10	0.80	3.5/795	0.20
#06BSS	9.525	6.35	5.72	3.28	13.15	14.10	8.20	1.30	6.2/1409	0.41
08BSS	12.700	8.51	7.75	4.45	16.7	18.20	11.80	1.60	12.0/2727	0.70
10BSS	15.875	10.16	9.65	5.08	19.5	20.90	14.70	1.70	14.5/3295	0.94
12BSS	19.050	12.07	11.68	5.72	22.5	24.20	16.00	1.85	18.5/4205	1.16
16BSS	25.400	15.88	17.02	8.28	36.1	37.40	21.00	4.15/3.1	40.0/9091	2.73
20BSS	31.750	19.05	19.56	10.19	41.3	45.00	26.40	4.5/3.5	59.0/13409	3.73
24BSS	38.100	25.40	25.40	14.63	53.4	57.80	33.20	6.0/4.8	104.0/25454	7.20
32BSS	50.800	29.21	30.99	17.81	66.0	71.00	42.00	7.0/6.0	150.0/34090	10.22

*Bushing chain: d1 in the table indicate the external diameter of the bushing
**Buchsenketten: In dieser Tabelle zeigt d1 den Außendurchmesser der Buchsen.*

#Straight side plates
#Gerade Laschen

Short pitch stainless steel conveyor chain with attachments
Anbauteile für Förderketten aus rostfreiem Stahl

WA–1 WA–2

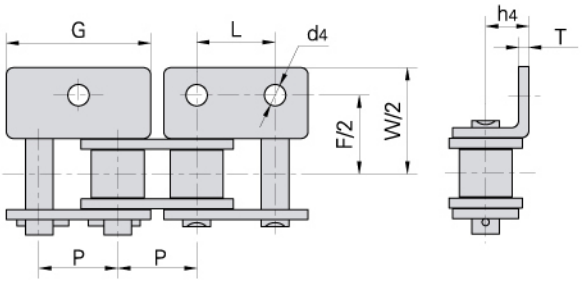

WK–1 WK–2

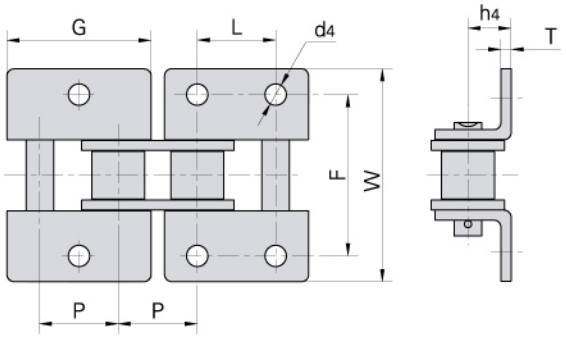

Donghua Chain No. *Donghua Ketten Nr.*	P	G	L	F	W	T	h4	d4
	mm	mm	mm	mm	mm	mm	mm	mm
40SS	12.700	23.00	12.700	25.4	35.60	1.50	7.90	3.4
50SS	15.875	28.80	15.875	31.8	46.80	2.03	10.30	5.5
60SS	19.050	34.65	19.050	38.1	56.40	2.42	11.90	5.5
80SS	25.400	45.90	25.400	50.8	73.20	3.25	15.90	6.8
100SS	31.750	57.65	31.750	63.5	89.80	4.00	19.80	9.2
08BSS	12.700	24.00	12.700	25.4	36.40	1.60	8.90	4.3
10BSS	15.875	29.58	15.875	31.8	44.60	1.70	10.31	5.3
12BSS	19.050	34.05	19.050	38.1	52.40	1.85	13.46	6.4
16BSS	25.400	46.40	25.400	50.8	72.60	3.10	15.88	6.4
20BSS	31.750	58.10	31.750	63.0	100.50	3.50	19.80	9.0

Double pitch stainless steel conveyor chains
Langgliedrige Förderketten aus rostfreiem Stahl

Small roller type
Typ Schonrollen

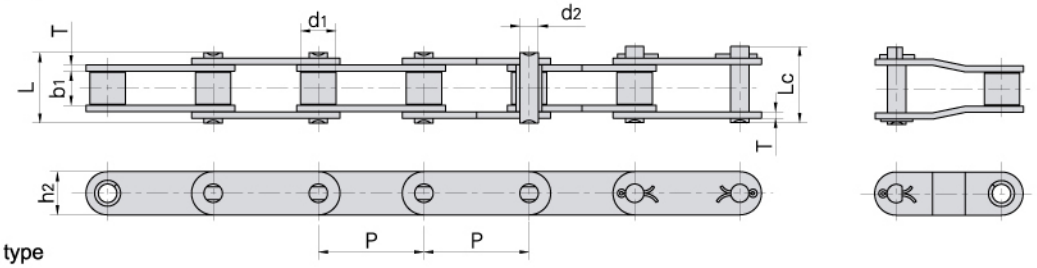

Large roller type
Typ Laufrollen

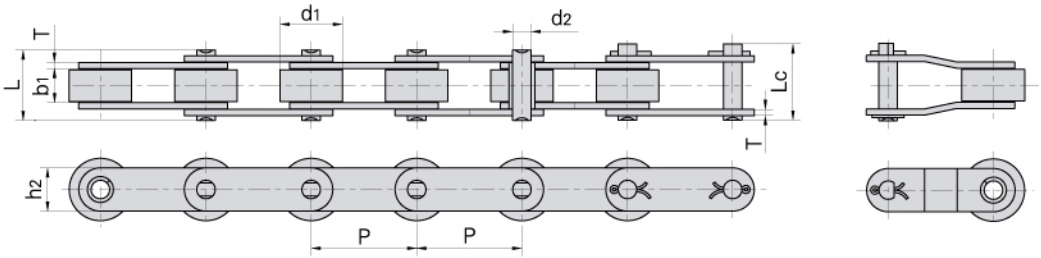

Donghua Chain No. *Donghua Ketten Nr.*	Pitch *Teilung*	Roller diameter *Rollen-durch-messer*	Width between inner plates *Innere Breite*	Pin diameter *Bolzen-durch-messer*	Pin length *Bolzen-länge*		Inner plate depth *Innen-laschen-höhe*	Plate thickness *Laschen-dicke*	Breaking load *Min. Bruchkraft*	Weight per meter *Gewicht*
	P	d_1 max	b_1 min	d_2 max	L max	Lc max	h_2 max	T max	Q min	q
	mm	mm	mm	mm	mm	mm	mm	mm	kN/LB	kg/m
C2040SS C2042SS	25.40	7.95 15.88	7.85	3.96	16.6	17.8	12.0	1.50	9.6/2182	0.51 0.85
C2040HSS	25.40	7.95	7.85	3.96	18.8	19.9	12.0	2.03	9.6/2182	0.66
C208BSS C208BLSS	25.40	8.51 15.88	7.75	4.45	16.7	18.2	11.8	1.60	12.0/2727	0.56 0.90
C2050SS C2052SS	31.75	10.16 19.05	9.40	5.08	20.7	22.2	15.0	2.03	15.2/3455	0.79 1.29
C2060SS C2062SS	38.10	11.91 22.23	12.57	5.94	25.9	27.7	18.0	2.42	21.7/4932	1.13 1.63
C2060HSS C2062HSS	38.10	11.91 22.23	12.57	5.94	29.2	31.6	18.0	3.25	21.7/4932	1.46 2.10
C2080SS C2082SS	50.80	15.88 28.58	15.75	7.92	32.7	36.5	24.0	3.25	38.9/8841	2.11 3.16
C2080HSS C2082HSS	50.80	15.88 28.58	15.75	7.92	36.2	39.4	24.0	4.00	38.9/8841	2.57 3.63
C2100SS C2102SS	63.50	19.05 39.67	18.90	9.53	40.4	44.7	30.0	4.00	60.0/13636	3.05 4.89
C2100HSS C2102HSS	63.50	19.05 39.67	18.90	9.53	43.6	46.9	30.0	4.80	60.0/13636	3.61 5.45

Double pitch stainless steel conveyor chain with attachments
Anbauteile für langgliedrige Förderketten aus rostfreiem Stahl

A–1

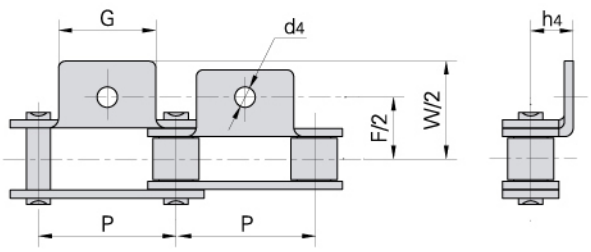

K–1

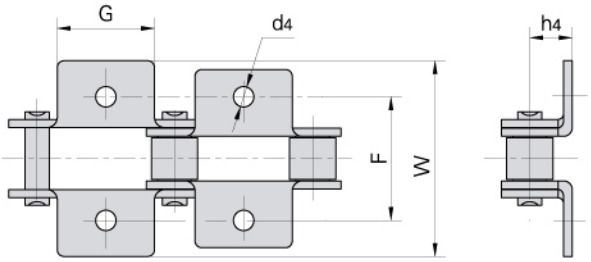

A–2

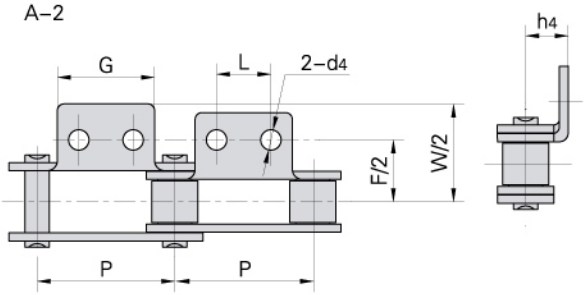

K–2

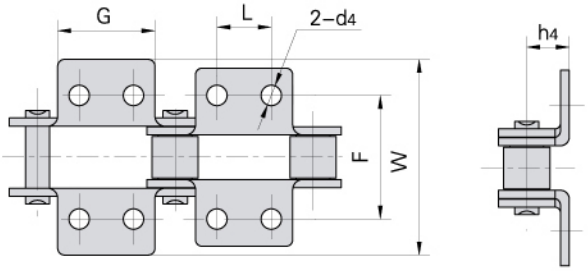

Chain No. *Donghua Ketten Nr.*	P mm	G mm	L mm	F mm	W mm	h4 mm	d4 mm
C2040SS C2042SS	25.40	19.1	9.5	25.4	39.6	9.1	3.4
C208BSS C208BLSS	25.40	23.2	12.7	25.4	39.6	9.1	4.5
C2050SS C2052SS	31.75	23.8	11.9	31.8	49.0	11.1	5.5
C2060SS C2062SS	38.10	28.6	14.3	42.9	67.8	14.7	5.5
C2060HSS C2062HSS	38.10	28.6	14.3	42.9	67.8	14.7	5.5
C2080SS C2082SS	50.80	38.1	19.1	55.6	87.8	19.1	6.8
C2080HSS C2082HSS	50.80	38.1	19.1	55.6	87.8	19.1	6.8
C2100SS C2102SS	63.50	47.6	23.8	66.6	107.5	23.4	9.2
C2100HSS C2102HSS	63.50	47.6	23.8	66.6	107.5	23.4	9.2





HOISTING CHAINS
FLYERKETTEN
FÜR HUBGERÄTE

Car parking chains
Ketten für den Autoparklift

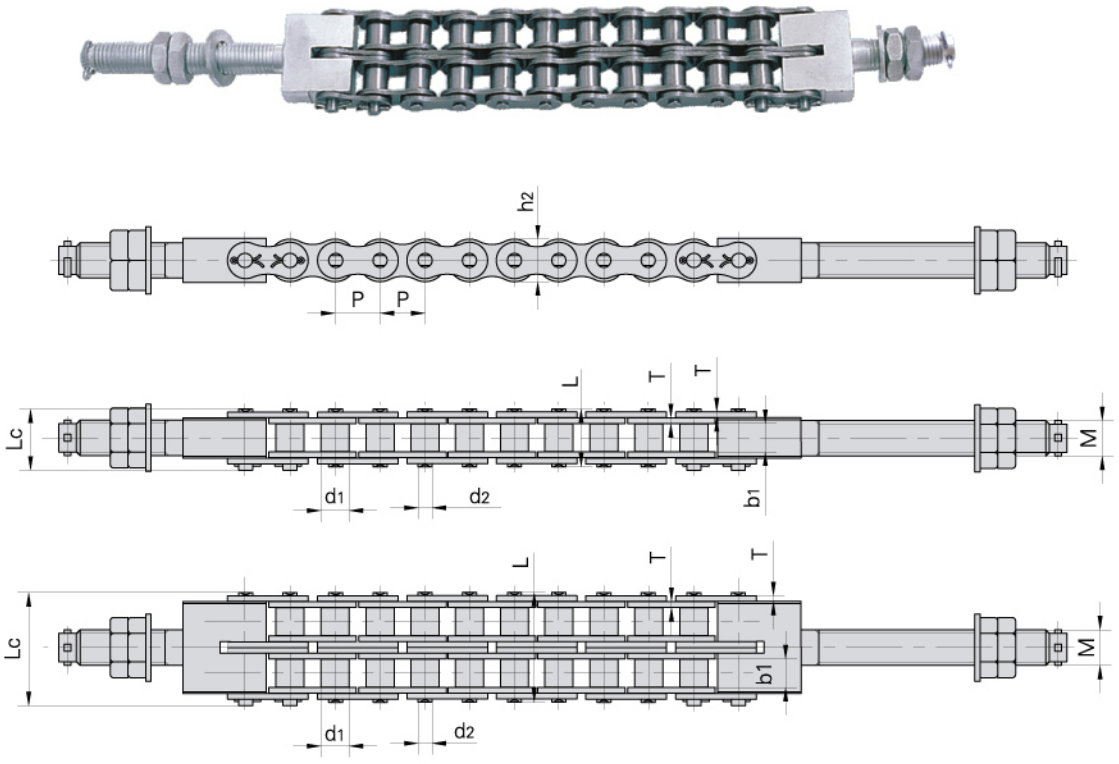

Donghua Chain No. *Donghua Ketten Nr.*	Pitch *Teilung* P mm	Roller diameter *Rollen-durch-messer* d_1 max mm	Width between inner plates *Innere Breite* b_1 min mm	Pin diameter *Bolzen-durch-messer* d_2 max mm	Pin length *Bolzen-länge* L max mm	Pin length *Bolzen-länge* Lc max mm	Inner plate depth *Innen-laschen-höhe* h_2 max mm	Plate thickness *Laschen-dicke* T max mm	Bolt type *Schraub-bolzentyp* M mm	Ultimate tensile strength *Min. Bruchkraft* Q min kN/LB	Average tensile strength *Durchschn. Bruchkraft* Q_0 kN	Weight per meter *Gewicht* q kg/m
16ALT–1	25.40	15.88	15.75	7.92	32.7	36.5	24.0	3.25	M20	71.55/16261	81.8	2.60
16ALT–2	25.40	15.88	15.75	7.92	62.7	65.8	24.0	3.25	M20	143.10/32523	166.3	5.15
20ALT–1	31.75	19.05	18.90	9.53	40.4	44.7	30.0	4.00	M24	107.85/24511	118.6	3.91
20ALT–2	31.75	19.05	18.90	9.53	76.4	80.5	30.0	4.00	M24	215.70/49023	234.4	7.80
20ALT–3	31.75	19.05	18.90	9.53	112.2	116.3	30.0	4.00	M24	323.55/73534	351.6	11.77
24ALT–1	38.10	22.23	25.22	11.10	50.3	54.3	35.7	4.80	M30	149.20/330909	161.1	5.62
24ALT–2	38.10	22.23	25.22	11.10	95.8	99.7	35.7	4.80	M30	298.40/67818	322.2	11.70

Leaf chains
Flyerketten

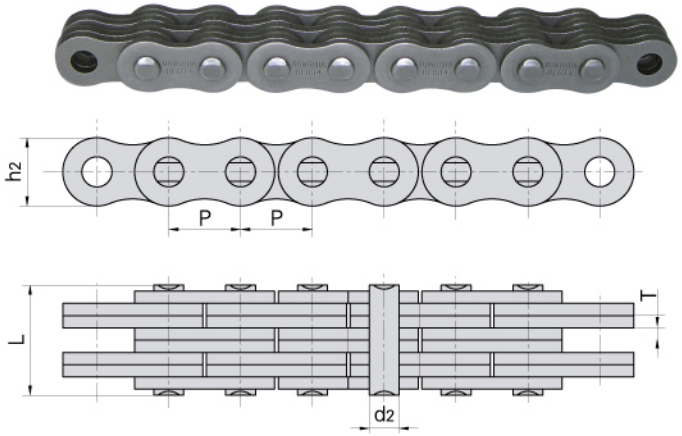

Plate lacing
Laschenkombination

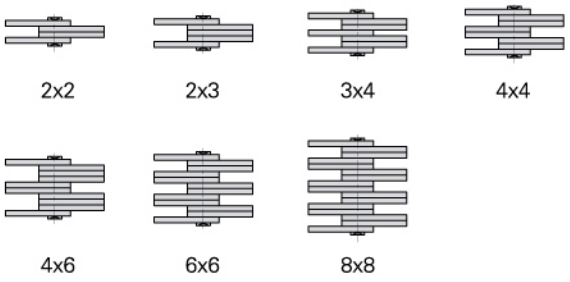

ISO Chain No. *ISO Ketten Nr.*	ANSI Chain No. *ANSI Ketten Nr.*	Pitch *Teilung* P	Plate lacing *Laschen-kombination*	Plate depth *Laschen-höhe* h2	Plate thickness *Laschen-dicke* T	Pin diameter *Bolzen-durch-messer* d2	Pin length *Bolzen-länge* L	Ultimate tensile strength *Min. Bruchkraft* Q	Average tensile strength *Durchschn. Bruchkraft*	Weight per meter *Gewicht*
				32.69	100.1/22750	125.1	2.65			
				42.57	133.4/30318	169.5	3.50			
				17.37	48.9/11114	63.6	1.45			
				20.73	48.9/11114	63.6	1.80			
				27.43	75.6/17181	102.8	2.50			
3.30	7.94			30.78	97.9/22250	120.9	2.90			
				37.49	97.9/22250	120.9	3.60			
				44.20	146.8/33364	190.8	4.30			
				57.61	195.7/44477	238.8	5.80			
				21.34	84.5/19204	108.2	2.20			
				25.48	84.5/19204	108.2	2.70			
				33.76	129.0/29318	170.0	3.80			
4.09	9.54			37.90	169.0/38409	214.6	4.30			
				46.18	169.0/38409	214.6	5.40			
				54.46	253.6/57636	324.5	6.50			
				71.02	338.1/76841	432.7	8.60			

FLYERKETTEN F

LH1066	BL566		6 × 6		
LH1088	BL588		8 × 8		
LH1222	BL622		2 × 2		
LH1223	BL623		2 × 3		
LH1234	BL634		3 × 4		
LH1244	BL644	19.05	4 × 4	18.11	
LH1246	BL646		4 × 6		
LH1266	BL666		6 × 6		
LH1288	BL688		8 × 8		
LH1622	BL822		2 × 2		
LH1623	BL823		2 × 3		
LH1634	BL834		3 × 4		
LH1644	BL844	25.4	4 × 4	24.13	
LH1646	BL846		4 × 6		
LH1666	BL866		6 × 6		
LH1688	BL888		8 × 8		

Leaf chains
Flyerketten

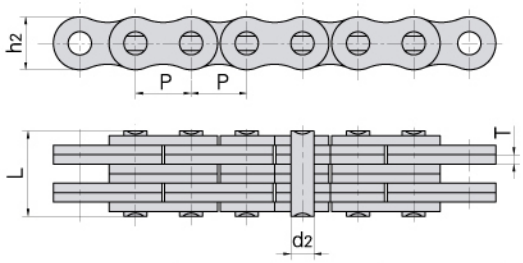

Plate lacing
Laschenkombination

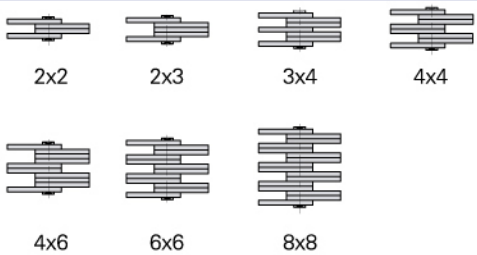

ISO Chain No. *ISO Ketten Nr.*	ANSI Chain No. *ANSI Ketten Nr.*	Pitch *Teilung* P mm	Plate lacing *Laschen-kombination*	Plate depth *Laschen-höhe* h_2 max mm	Plate thickness *Laschen-dicke* T max mm	Pin diameter *Bolzen-durch-messer* d_2 max mm	Pin length *Bolzen-länge* L max mm	Ultimate tensile strength *Min. Bruchkraft* Q min kN/LB	Average tensile strength *Durchschn. Bruchkraft* Q_0 kN	Weight per meter *Gewicht* q kg/m
LH2022	BL1022		2 × 2				25.37	115.6/26272	150.8	3.40
LH2023	BL1023		2 × 3				30.33	115.6/26272	150.8	4.30
LH2034	BL1034		3 × 4				40.23	182.4/41454	231.6	6.00
LH2044	BL1044	31.75	4 × 4	30.18	4.9	11.11	45.19	231.3/52568	291.4	6.90
LH2046	BL1046		4 × 6				55.09	231.3/52568	291.4	8.60
LH2066	BL1066		6 × 6				65.00	347.0/78863	430.3	10.30
LH2088	BL1088		8 × 8				84.81	462.6/105136	555.1	13.80
LH2422	BL1222		2 × 2				29.62	151.2/34363	192.0	4.6
LH2423	BL1223		2 × 3				35.43	151.2/34363	192.0	5.8
LH2434	BL1234		3 × 4				47.07	244.6/55591	315.9	8.1
LH2444	BL1244	38.1	4 × 4	36.20	5.77	12.71	52.88	302.5/68750	381.1	9.3
LH2446	BL1246		4 × 6				64.52	302.5/68750	381.1	11.6
LH2466	BL1266		6 × 6				76.15	453.7/103113	543.6	13.9
LH2488	BL1288		8 × 8				99.42	605.0/137500	726.0	18.6
LH2822	BL1422		2 × 2				33.55	191.3/43477	225.7	6.1
LH2823	BL1423		2 × 3				40.16	191.3/43477	225.7	7.6

FLYERKET

		61.70	433.7/98568	511.7	19.8
		81.61	649.4/147590	766.2	27.7
9.91	23.81	91.57	867.4/197163	1023.5	31.6
		111.48	867.4/197163	1023.5	39.5
		131.39	1301.1/295704	1535.2	47.4
		171.22	1734.8/394272	2046.5	63.2

LH4023	BL2023		2 × 3	
LH4034	BL2034		3 × 4	
LH4044	BL2044	63.5	4 × 4	60.33
LH4046	BL2046		4 × 6	
LH4066	BL2066		6 × 6	
LH4088	BL2088		8 × 8	

www.dhchain.com

Leaf chains
Flyerketten

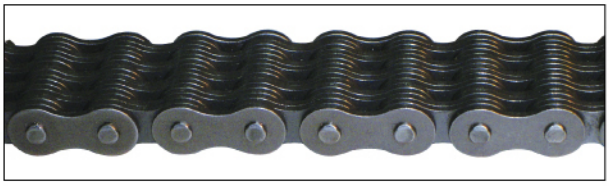

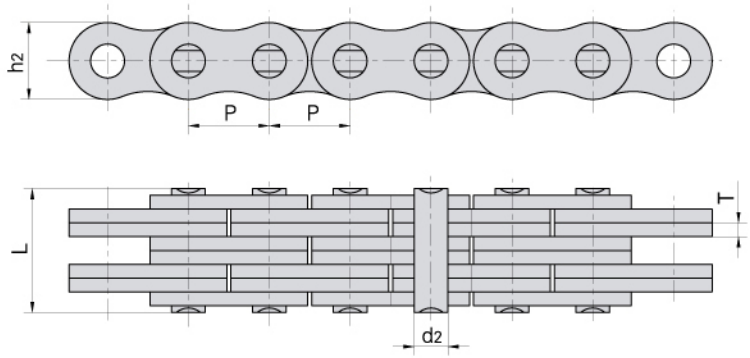

Plate lacing
Laschenkombination

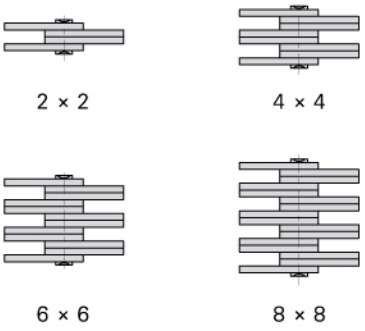

DIN/ISO Chain No. *DIN/ISO Ketten Nr.*	Pitch *Teilung*	Plate lacing *Laschen-kombination*	Plate depth *Laschen-höhe*	Plate thickness *Laschen-dicke*	Pin diameter *Bolzen-durch-messer*	Pin length *Bolzen-länge*	Ultimate tensile strength *Min. Bruchkraft*	Average tensile strength *Durchschn. Bruchkraft*	Weight per meter *Gewicht*
	P		h_2 max	T max	d_2 max	L max	Q min	Q_0	q
	mm		mm	mm	mm	mm	kN/LB	kN	kg/m
LL0822	12.700	2 × 2	10.6	1.6	4.45	8.9	18.2/4094	20.4	0.42
LL0844		4 × 4				15.6	36.4/8188	40.7	0.84
LL0866		6 × 6				22.0	54.6/12283	60.0	1.24
LL0888		8 × 8				28.5	72.8/16378	80.0	1.64
LL1022	15.875	2 × 2	13.7	1.6	5.08	9.2	22.7/5107	25.5	0.54
LL1044		4 × 4				15.8	45.4/10213	51.0	1.06
LL1066		6 × 6				22.1	68.1/15321	76.3	1.57
LL1088		8 × 8				28.8	90.8/20427	101.9	2.10
LL1222	19.050	2 × 2	16.0	1.85	5.72	10.4	29.5/6637	33.2	0.73
LL1244		4 × 4				17.9	59.0/13273	66.4	1.44
LL1266		6 × 6				25.4	88.5/19910	99.7	2.15
LL1288		8 × 8				32.9	118.0/26547	132.9	2.84

Leaf chains
Flyerketten

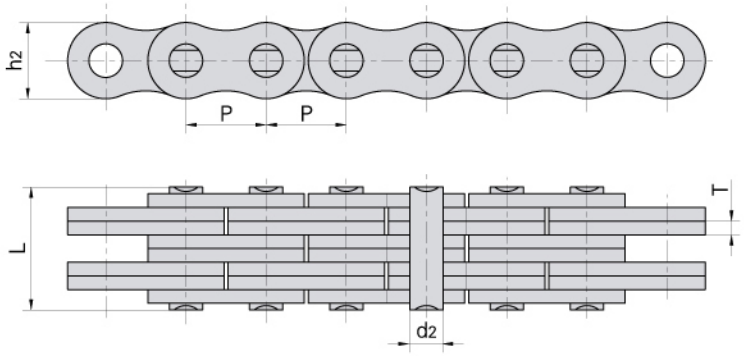

Plate lacing
Laschenkombination

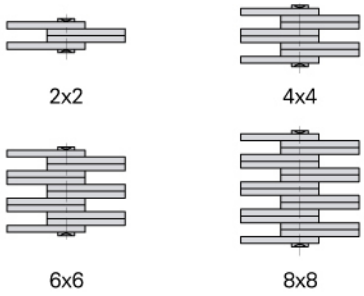

DIN/ISO Chain No. *DIN/ISO Ketten Nr.*	Pitch *Teilung*	Plate lacing *Laschen-kombination*	Plate depth *Laschen-höhe*	Plate thickness *Laschen-dicke*	Pin diameter *Bolzen-durch-messer*	Pin length *Bolzen-länge*	Ultimate tensile strength *Min. Bruchkraft*	Average tensile strength *Durchschn. Bruchkraft*	Weight per meter *Gewicht*
	P		h_2 max	T max	d_2 max	L max	Q min	Q_0	q
	mm		mm	mm	mm	mm	kN/LB	kN	kg/m
LL1622	25.40	2×2	21.00	3.1	8.28	17.2	58.0/13182	66.7	1.52
LL1644		4×4				29.6	116.0/26363	140.0	2.90
LL1666		6×6				42.4	174.0/39545	208.8	4.30
LL1688		8×8				54.9	232.0/52726	278.0	5.71
LL2022	31.75	2×2	26.40	3.5	10.19	20.1	95.0/21591	109.2	2.33
LL2044		4×4				33.8	190.0/43182	218.5	4.40
LL2066		6×6				50.1	285.0/64773	324.6	6.79
LL2088		8×8				64.0	380.0/86363	435.1	8.90
LL2422	38.10	2×2	33.40	5.0	14.63	28.4	170.0/38363	195.5	4.47
LL2444		4×4				46.3	340.0/77273	380.8	8.22
LL2466		6×6				66.4	510.0/115909	571.2	12.22
LL2488		8×8				86.6	680.0/154545	775.2	16.30
LL2822	44.45	2×2	37.08	6.0	15.90	32.2	200.0/45455	224.0	5.10
LL2844		4×4				56.4	400.0/90909	448.0	9.90
LL2866		6×6				80.8	600.0/136363	672.0	14.60
LL2888		8×8				105.2	800.0/181818	896.0	19.40
LL3222	50.80	2×2	42.00	6.4	17.81	34.8	260.0/59091	291.2	6.20
LL3244		4×4				60.6	520.0/118182	582.4	12.30
LL3266		6×6				86.4	780.0/177272	873.6	18.30
LL3288		8×8				112.2	1040.0/233970	1176.0	24.00
LL4022	63.50	2×2	52.76	8.0	22.89	42.2	360.0/81818	403.2	10.30
LL4044		4×4				74.4	780.0/177273	873.6	20.00
LL4066		6×6				106.5	1080.0/245454	1209.6	30.00
LL4088		8×8				140.0	1440.0/323959	1747.2	39.10
LL4822	76.20	2×2	63.88	10.0	29.24	54.6	560.0/127272	627.2	18.50
LL4844		4×4				92.6	1120.0/254545	1554.4	35.70
LL4866		6×6				133.4	1680.0/377953	1880.0	53.00
LL4888		8×8				174.2	2240.0/509091	2508.8	70.40

Leaf chains
Flyerketten

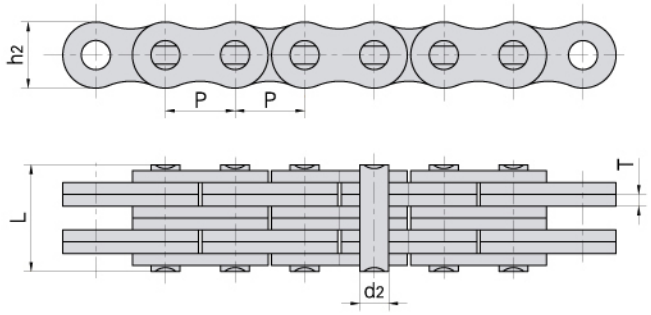

Plate lacing
Laschenkombination

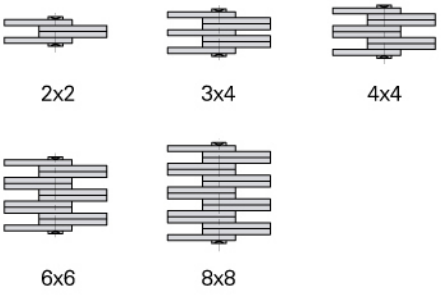

ANSI Chain No. *ANSI Ketten Nr.*	Pitch *Teilung*	Plate lacing *Laschen-kombination*	Plate depth *Laschen-höhe*	Plate thickness *Laschen-dicke*	Pin diameter *Bolzen-durch-messer*	Pin length *Bolzen-länge*	Ultimate tensile strength *Min. Bruchkraft*	Average tensile strength *Durchschn. Bruchkraft*	Weight per meter *Gewicht*
	P		h_2 max	T max	d_2 max	L max	Q min	Q_0	q
	mm		mm	mm	mm	mm	kN/LB	kN	kg/m
AL322	9.525	2 X 2	7.7	1.30	3.58	6.8	9.0/2045	10.2	0.23
AL344		4 X 4				11.6	18.0/4090	20.0	0.46
AL422	12.700	2 X 2	10.4	1.50	3.96	8.3	14.1/3205	16.9	0.39
AL444		4 X 4				14.4	28.2/6409	35.2	0.74
AL466		6 X 6				20.5	42.3/9614	52.7	1.13
AL522	15.875	2 X 2	12.8	2.03	5.08	11.05	22.0/5000	27.5	0.64
AL534		3 X 4				17.0	33.0/7500	46.0	1.10
AL544		4 X 4				19.4	44.0/10000	55.0	1.25
AL566		6 X 6				27.5	66.0/15000	82.5	1.79
AL622	19.050	2 X 2	15.6	2.42	5.94	13.0	37.0/8409	44.4	0.86
AL644		4 X 4				22.7	63.7/14450	78.8	1.76
AL666		6 X 6				32.2	100.1/22750	118.6	2.60
AL688		8 X 8				42.2	133.4/30317	156.6	3.49
AL822	25.400	2 X 2	20.5	3.25	7.92	16.2	56.7/12886	68.6	1.54
AL844		4 X 4				29.4	113.4/25773	135.6	3.00
AL866		6 X 6				44.2	170.0/38636	202.3	4.46
AL1022		2 X 2				19.6	88.5/20114	107.1	2.37

Leaf chains
Flyerketten

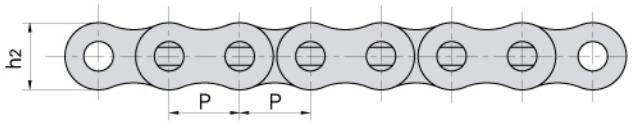

Plate lacing
Laschenkombination

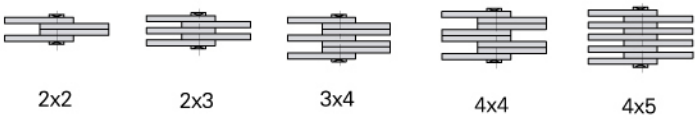

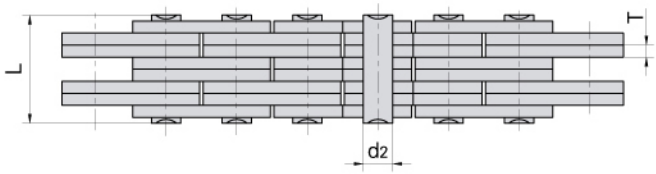



Donghua Chain No. *Donghua Ketten Nr.*	Pitch *Teilung* P mm	Plate lacing *Laschen-kombination*	Plate depth *Laschen-höhe* h2 max mm	Plate thickness *Laschen-dicke* T max mm	Pin diameter *Bolzen-durch-messer* d2 max mm	Pin length *Bolzen-länge* L max mm	Ultimate tensile strength *Min. Bruchkraft* Q min kN/LB	Average tensile strength *Durchschn. Bruchkraft* Q0 kN	Weight per meter *Gewicht* q kg/m
FL644	5.940	4×4	4.7	0.60	1.85	6.6	6.5/1477	7.8	0.13
FL666		6×6				9.3	9.75/2216	11.8	0.20
FL688		8×8				12.0	13.0/2955	15.6	0.25
FL523	8.000	2×3	6.3	1.00	2.31	6.7	7.00/1575	7.4	0.18
FL844		4×4	6.9	0.73		7.9	10.0/2273	12.1	0.25
FL944	9.525	4×4	8.7	1.04	3.28	10.4	21.0/4724	24.7	0.43
FL945		4×5				11.5	21.00/4724	23.0	0.50
FL966		6×6				14.9	31.0/7045	36.8	0.65
FL988		8×8				19.0	42.00/9450	46.2	0.87
F122	12.700	2×2	8.2	1.00	3.58	7.0	11.43/2598	13.6	0.19
F1223		2×3	10.2	2.03	4.45	12.8	20.0/4545	23.8	0.61
FL1244		4×4	10.2	1.70	4.45	16.7	44.0/10000	52.3	0.83
F1023	15.875	2×3	14.3	2.42	4.75	15.9	25.00/5625	27.5	1.11
FLC534	15.875	3×4	12.7	1.85	5.08	15.3	40.4/9181	44.4	0.99
FLC545		4×5				19.2	54.3/12340	59.7	1.27
FLC556		5×6				22.7	67.6/15363	74.3	1.54
FLC567		6×7				26.8	80.80/18176	89.0	1.82
FLC578		7×8				30.8	90.00/20250	99.0	2.10
LF1866	18.550	6×6	15.8	3.00	6.00	39.2	106.00/23845	116.6	3.58

Leaf chains
Flyerketten

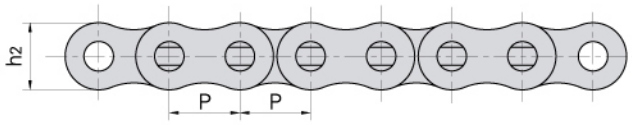

Plate lacing
Laschenkombination

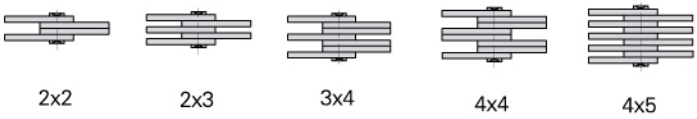

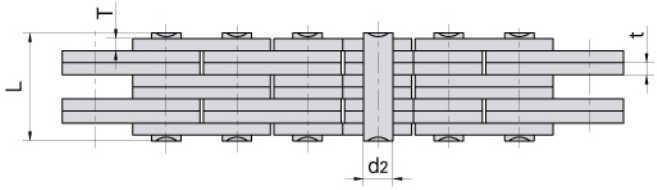

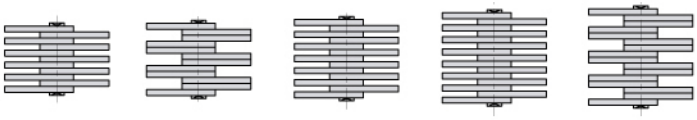

Donghua Chain No. *Donghua Ketten Nr.*	Pitch *Teilung*	Plate lacing *Laschen-kombination*	Plate depth *Laschen-höhe*	Plate thickness *Laschen-dicke*	Pin diameter *Bolzen-durch-messer*	Pin length *Bolzen-länge*	Ultimate tensile strength *Min. Bruchkraft*	Average tensile strength *Durchschn. Bruchkraft*	Weight per meter *Gewicht*
	P		h_2 max	t/T max	d_2 max	L max	Q min	Q_0	q
	mm		mm	mm	mm	mm	kN/LB	kN	kg/m
F19V–44	19.05	4 × 4	15.20	2.42	6.50	22.4	71.0/16136	84.3	1.73
F19V–66		6 × 6				32.3	106.0/24090	125.9	2.57
F19S–44	19.05	4 × 4	14.70	2.25	5.98	21.8	76.50/17210	84.5	1.55
F19S–66		6 × 6				31.0	115.0/25870	126.5	2.31
FLC834	25.40	3 × 4	19.46	3.25	8.28	27.4	100.00/22500	110.0	2.57
FLC856		5 × 6				40.5	166.00/37343	183.0	4.00
FLC867		6 × 7				47.0	195.70/44024	215.3	4.70
FLC878		7 × 8				53.6	227.50/51180	250.5	5.40
F25–34	25.40	3 × 4	23.40	3.05/4.00	10.85	28.6	125.00/28120	137.5	3.64
F25–66		6 × 6				44.1	250.00/56240	275.0	5.93
FLC1045	31.75	4 × 5	25.40	3.25	9.53	34.3	110.00/24745	121.0	4.49
FLC1056		5 × 6				40.6	137.9/31340	151.0	5.44
FLC1067		6 × 7				47.2	165.4/37590	181.9	6.42
FLC1078		7 × 8				53.8	193.0/43863	212.0	7.40

Leaf chains
Flyerketten

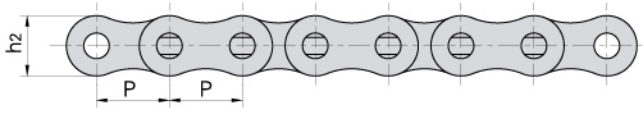

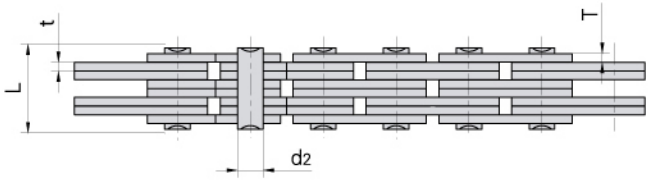

Plate lacing
Laschenkombination

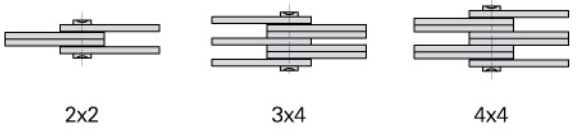

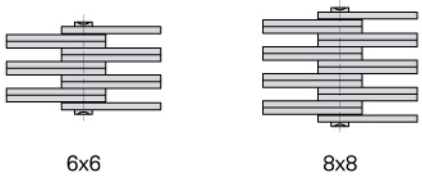

Donghua Chain No. *Donghua Ketten Nr.*	Pitch *Teilung* P mm	Plate lacing *Laschen-kombination*	Plate depth *Laschen-höhe* h_2 max mm	Plate thickness *Laschen-dicke* t/T max mm	Pin diameter *Bolzen-durch-messer* d_2 max mm	Pin length *Bolzen-länge* L max mm	Ultimate tensile strength *Min. Bruchkraft* Q min kN/LB	Average tensile strength *Durchschn. Bruchkraft* Q_0 KN	Weight per meter *Gewicht* q kg/m
AL0522	8.000	2×2	7.1	0.8	2.31	5.0	4.4/990	4.6	0.15
AL0544		4×4				8.2	8.8/1980	9.3	0.28
AL322F1	9.525	2×2	7.0	1.3	3.58	7.5	9.3/2092	9.8	0.22
AL344F1		4×4				12.8	18.5/4162	19.4	0.42
AL366F1		6×6				18.2	27.8/6254	29.2	0.62
AL388F1		8×8				23.6	37.0/8323	38.8	0.82
AL866F1	25.400	6×6	20.5	3.0	7.92	40.3	135.0/30370	148.5	4.40
AL1266F1	38.100	6×6	30.0	4.8	13.30	64.3	420.0/94482	462.0	9.68
BL866F1	25.400	6×6	24.1	3.1/4.0	10.85	45.7	200.0/44992	220.0	6.14
BL834F2		3×4				29.5	120.0/26995	132.0	3.76
BL834F3	25.400	3×4	24.1	4.0	10.90	32.9	142.0/31944	156.2	4.44
BL866F3		6×6				52.2	253.6/57050	279.0	7.48
BL834F5		3×4		3.1/4.0		28.0	120.0/26995	132.0	3.64
BL866F5		6×6		3.3/4.0		45.3	200.0/44992	220.0	4.94
LL1622F6	25.400	2×2	20.0	3.0	8.28	15.6	58.0/13047	63.8	1.40
LH3288F1	50.800	8×8	47.8	6.9	20.20	122.0	1200.0/269950	1320.0	33.53
LH3266F2	50.800	6×6	48.2	7.0	17.46	91.8	867.0/195040	953.7	24.52
LL3244F2	50.800	4×4	43.1	6.0	17.76	54.0	520.0/116978	572.0	12.62
LL4888H	76.200	8×8	70.0	12.0	36.50	204.0	2630.0/591638	2893.0	83.80

Leaf chains
Flyerketten

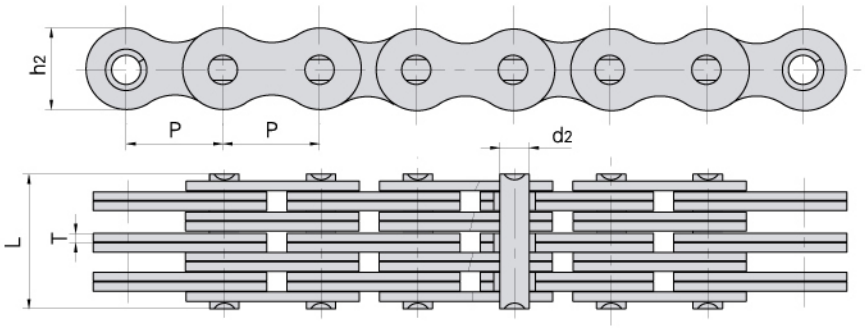

Donghua Chain No. *Donghua Ketten Nr.*	Pitch *Teilung*	Plate lacing *Laschen-kombination*	Plate depth *Laschen-höhe*	Plate thickness *Laschen-dicke*	Pin diameter *Bolzen-durch-messer*	Pin length *Bolzen-länge*	Ultimate tensile strength *Min. Bruchkraft*	Average tensile strength *Durchschn. Bruchkraft*	Weight per meter *Gewicht*
	P		h2 max	T max	d2 max	L max	Q min	Q0	q
	mm		mm	mm	mm	mm	kN/LB	kN	kg/m
FB156	15.875	6×6	14.7	1.70	5.08	24.0	78.0/17550	86.0	1.91
FB156S				2.03		27.5	83.5/18784	92.0	2.24
FB196	19.050	6×6	16.0	1.85	5.72	25.4	95.0/21371	105.0	1.94
FB196S			18.4	2.42	6.50	32.3	130.0/29244	143.0	3.37

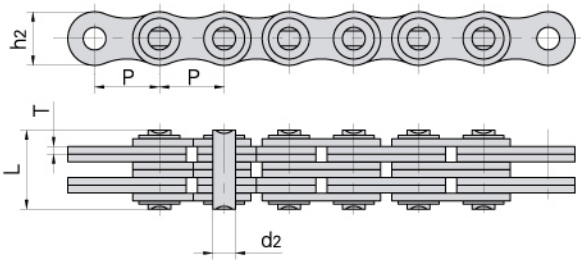

Plate lacing
Laschenkombination

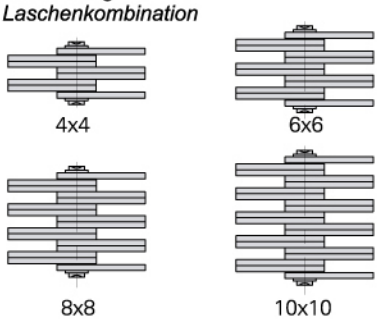

Donghua Chain No. *Donghua Ketten Nr.*	Pitch *Teilung*	Plate lacing *Laschen-kombination*	Plate depth *Laschen-höhe*	Plate thickness *Laschen-dicke*	Pin diameter *Bolzen-durch-messer*	Pin length *Bolzen-länge*	Ultimate tensile strength *Min. Bruchkraft*	Average tensile strength *Durchschn. Bruchkraft*	Weight per meter *Gewicht*
	P		h2 max	T max	d2 max	L max	Q min	Q0	q
	mm		mm	mm	mm	mm	kN/LB	kN	kg/m
BL1266F1	38.1	6×6	35.7	5.6	12.70	78.9	453.7/102063	499.0	15.69
BL1666F4	50.8	6×6	48.2	7.2	17.46	99.2	867.0/195040	953.7	27.27
LL3244F1	50.8	4×4	42.0	6.0	17.81	61.6	520.0/116978	572.0	12.90
LL3266F1		6×6				86.0	780.0/175467	858.0	18.90
LL3288F1		8×8				110.0	1040.0/233956	1144.0	24.89
LL321010F1		10×10				134.3	1300.0/292445	1430.0	30.89
LL3244F3	50.8	4×4	43.1	6.0	17.76	60.0	520.0/116978	572.0	13.06
LL3266F3		6×6				84.4	780.0/175467	858.0	19.44
LL3288F3		8×8				108.6	1040.0/233956	1144.0	25.43
LL3244F4	50.8	4×4	42.0	6.4	17.81	67.5	520.0/116980	572.0	13.82
LL3266F4		6×6				92.8	780.0/175467	858.0	20.17

Leaf chains
Flyerketten

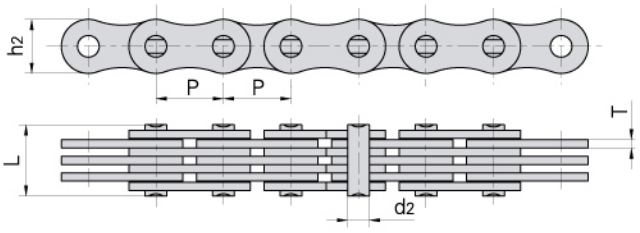

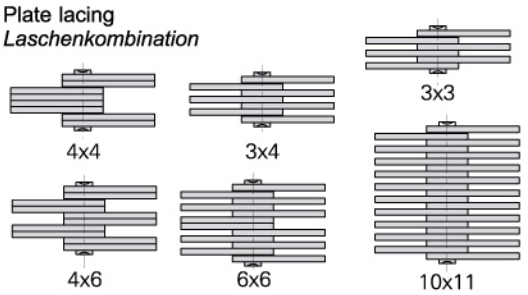

Donghua Chain No. *Donghua Ketten Nr.*	Pitch *Teilung*	Plate lacing *Laschen-kombination*	Plate depth *Laschen-höhe*	Plate thickness *Laschen-dicke*	Pin diameter *Bolzen-durch-messer*	Pin length *Bolzen-länge*	Ultimate tensile strength *Min. Bruchkraft*	Average tensile strength *Durchschn. Bruchkraft*	Weight per meter *Gewicht*
	P		h_2 max	T max	d_2 max	L max	Q min	Q_0	q
	mm		mm	mm	mm	mm	kN/LB	kN	kg/m
F1266F1	12.7	6×6	9.0	1.60	3.70	21.6	45.0/10123	50.0	0.92
LF10	10.0	3×3	7.5	1.20	3.20	10.6	14.0/3150	15.5	0.39
LF1234	12.0	3×4	10.0	2.03	3.96	17.6	15.45/3476	17.0	0.85
LF1246	12.0	4×6	10.8	1.60	5.08	18.7	30.0/6748	33.0	1.05
LF105	105.0	10x11	80.0	6.00	40.00	143.0	1470.0/330690	115.5	64.38
P35–44	35.0	4×4	30.0	4.00	12.00	37.7	100.0/22500	110.0	5.96

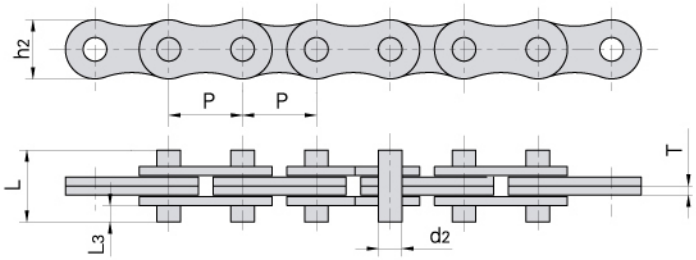

Donghua Chain No. *Donghua Ketten Nr.*	Pitch *Teilung*	Plate depth *Laschen-höhe*	Plate thickness *Laschen-dicke*	Pin diameter *Bolzen-durch-messer*	Pin length *Bolzen-länge*		Ultimate tensile strength *Min. Bruchkraft*	Average tensile strength *Durchschn. Bruchkraft*	Weight per meter *Gewicht*
	P	h_2 max	T max	d_2 max	L max	L_3	Q min	Q_0	q
	mm	mm	mm	mm	mm	mm	kN/LB	kN	kg/m
AL422F1–D2	12.700	11.0	1.60	3.96	14.4	3.80	14.1/3172	15.5	0.50
AL522–D2	15.875	12.8	2.03	5.10	16.0	3.90	22.0/4950	23.0	0.69
AL522F1–D2	15.800	12.7	2.00	5.09	16.1	3.90	30.38/6834	32.0	0.66
AL622F1	19.050	16.9	3.25	5.94	22.3	4.40	50.0/11250	52.0	1.44
LH1622–D2	25.400	24.1	4.00	9.53	36.0	9.80	84.5/19010	93.0	2.83
BL822F1–D2	25.400	24.1	4.60	8.80	32.4	4.60	84.5/19010	93.0	3.03
BL822HF1–D2	25.400	24.1	4.60	9.53	32.4	6.80	84.5/19010	93.0	3.07
BL1022F1–D2	31.750	29.0	5.60	11.30	41.2	5.60	130.0/29245	143.0	4.49
BL1022H–D2	31.750	29.7	5.60	11.10	41.2	8.40	130.0/29245	143.0	4.69
LL1222F3–D2	19.050	14.5	2.25	5.72	22.0	5.72	44.1/9920	48.5	0.89
LL1622–D2	25.400	21.0	3.10	8.28	36.1	11.70	58.0/13050	64.0	1.92
F2022–D2	20.750	19.0	3.40	7.65	23.0	4.50	50.0/11500	55.0	1.79
F2422–D2	23.950	22.2	3.86	8.69	27.8	5.90	60.0/13500	66.0	2.37
F2422F1–D2	24.000	22.0	4.00	9.00	27.0	5.40	60.0/13500	66.0	2.39

Leaf chains
Flyerketten

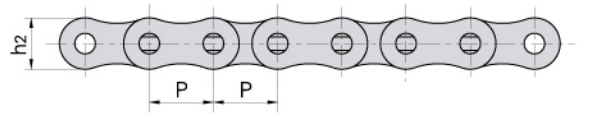

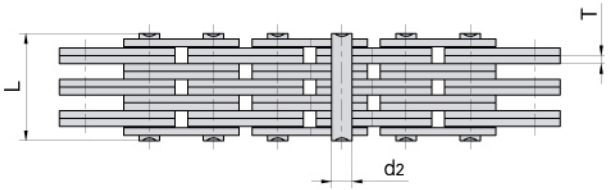

Plate lacing
Laschenkombination

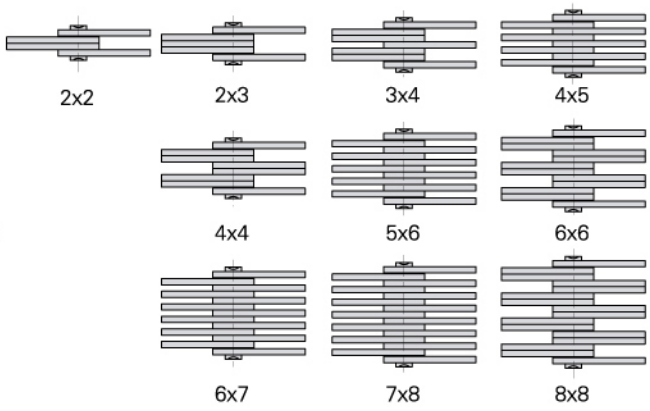

Donghua Chain No. *Donghua Ketten Nr.*	Pitch *Teilung* P mm	Plate lacing *Laschen-kombination*	Plate depth *Laschen-höhe* h_2 max mm	Plate thickness *Laschen-dicke* T max mm	Pin diameter *Bolzen-durch-messer* d_2 max mm	Pin length *Bolzen-länge* L max mm	Chain length for 100 pitches (±0.25%) *Kettenlänge (100 Teilungen)* mm	Ultimate tensile strength *Min. Bruchkraft* Q min kN/LB	Weight per meter *Gewicht* q kg/m
1234	12.7	3×4	10.6	1.70	4.45	14.2	1262	31.0/6974	0.75
1256		5×6				21.1		53.0/12045	1.17
1288		8×8				29.9		85.0/19318	1.70
1523	15.875	2×3	12.7	1.94	5.08	12.1	1580	29.0/6590	0.75
1534		3×4				16.0		46.0/10454	1.04
1544		4×4				18.1		58.0/13181	1.18
1545		4×5				20.3		58.0/13181	1.33
1556		5×6				24.0		72.0/16363	1.63
1566		6×6				26.2		87.0/19772	1.77
1567		6×7				28.0		90.0/20454	1.91
1578		7×8				32.5		101.0/22954	2.20
1588		8×8				34.0		115.0/26136	2.34
1944	19.05	4×4	15.0	2.29	5.72	21.3	1891	73.0/16590	1.58
1966		6×6				30.7		110.0/25000	2.37
1988		8×8				40.0		140.0/31817	3.13
2523	25.4	2×3	20.2	3.06	8.28	18.8	2532	72.0/16363	1.83
2534		3×4				25.3		108.0/24545	2.55
2545		4×5				31.6		144.0/30727	3.26
2556		5×6				37.2		180.0/40908	3.96
2567		6×7				43.8		216.0/49090	4.68
2578		7×8				50.0		252.0/57272	5.39
2588		8×8				52.8		290.0/65908	5.77



LEAF CHAINS FOR SKY STACKER
FLYERKETTEN FÜR CONTAINERKRÄNE



Leaf chains for sky stacker
Flyerketten für Containerkräne



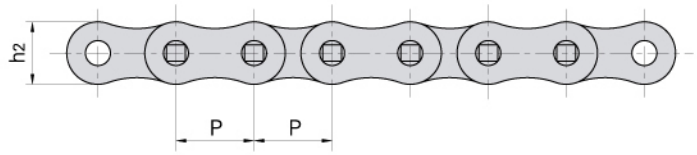

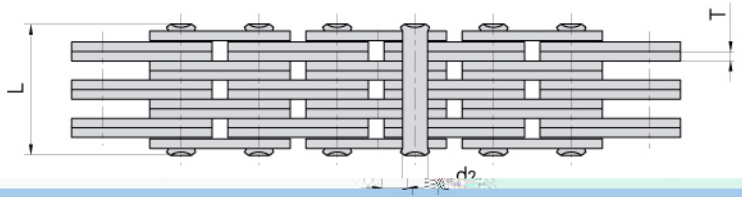

Plate lacing
Laschenkombination

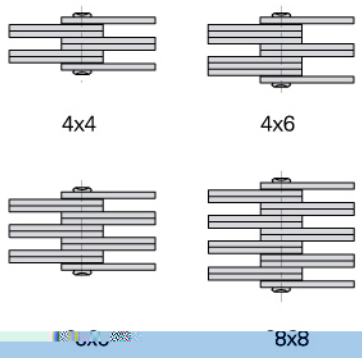

Q min	q
kN/LB	kg/m
5.0/1125	0.7
12.5/2812	1.1
25.0/5624	1.8
40.0/8999	3.4
60.0/13498	4.5
80.0/17998	5.0
100.0/22497	7.0
150.0/33746	11.3
200.0/44994	14.5
250.0/56243	17.1
375.0/84364	34.0
500.0/112486	39.0
750.0/168728	53.0
1000.0/224972	77.0
1250.0/281215	90.0
1500.0/337458	112.0

Donghua Ketten Nr.	P	b1 min		d1 max	d2 max	L max	h2 max	T max
	mm	mm		mm	mm	mm	mm	mm
MP15	15	12	2×2	5	4	25	12	2.03
MP20	20	15	2×2	8	6	28	15	2.03
MP25	25	18	2×2	10	8	36	18	3.00
MP30	30	20	4×4	11	9	51	20	3.00
MP35	35	22	4×4	12	10	53	26	3.00
MP40	40	25	4×4	14	12	58	32	3.00
MP45	45	30	4×4	17	14	63	35	3.00
MP50	50	35	4×4	22	18	90	40	4.50
MP55	55	40	4×4	24	21	108	42	6.00
MP60	60	45	4×4	26	23	114	46	6.00
MP70	70	50	6×6	32	28	148	55	6.00
MP80	80	60	6×6	36	32	159	60	6.00
MP90	90	70	6×6	40	36	184	70	7.00
MP100	100	80	8×8	45	40	224	80	7.00
MP110	110	90	8×8	50	45	236	90	7.00
MP120	120	100	8×8	55	50	262	100	8.00

ghua in No. / ghua en Nr.	Teilung	Bushing diameter / Buchsen-durchmesser	Inner plates between / Innere Breite	Pin diameter / Bolzen-durchmesser	Pin length / Bolzenlänge		Inner plate depth / Innenlaschenhöhe	Plate thickness / Laschendicke	Ultimate tensile strength / Min. Bruchkraft	Average tensile strength / Durchschn. Bruchkraft	Weight per meter / Gewicht
	P	d1 max	b1 min	d2 max	L max	Lc max	h2 max	T max	Q min	Q0	q
	mm	mm	mm	mm	mm	mm	mm	mm	kN/LB	kN	kg/m
5–1	12.700	5.63	7.85	3.96	16.6	17.8	12.00	1.50	14.10/3205	17.5	0.54
5–1	15.875	7.03	9.40	5.08	20.7	22.2	15.09	2.03	22.20/5045	29.4	0.83
5–1	19.050	8.33	12.57	5.94	25.9	27.7	18.00	2.42	31.80/7227	41.5	1.22
5–1	25.400	11.10	15.75	7.92	32.7	35.0	24.00	3.25	56.70/12886	69.4	2.16
5–1	31.750	13.60	18.90	9.53	40.4	44.7	30.00	4.00	88.50/20114	88.90/20114	109.2	3.31
125–1	38.100	15.60	25.22	11.10	50.3	54.3	35.70	4.80	127.00/28864	156.3	4.97
145–1	44.450	18.00	25.22	12.70	54.4	59.0	41.00	5.60	172.40/39182	212.0	6.50
165–1	50.800	20.00	31.55	14.27	64.8	69.6	47.80	6.40	226.80/51545	278.9	8.70

SOME CHAINS FOR APPLICATION
BEISPIELE DER KETTENANWENDUNG



1. Drive chain for gearbox
Antriebsketten für Getriebegehäuse



2. Drive chain for escalator
Antriebsketten für Fahrtreppen



3. Drive chain for oil field
Antriebsketten für Erdölfelder



4. Drive chain for engineering machinery
Antriebsketten für Fördermaschinen



5. Port machinery driving chain
Antriebsketten für Hafenanlagen



6. Port machinery driving chain
Antriebsketten für Hafenanlagen

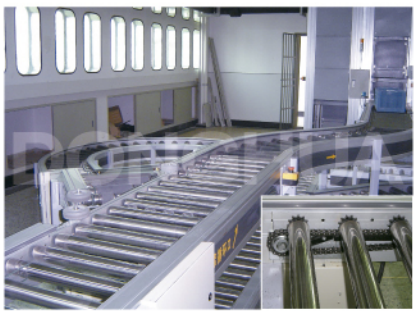

7. Conveyor chain
Antriebsketten für Förderer



8. Driving chain for gear-box
Antriebsketten für Getriebegehäuse



9. Lathe driving chain
Antriebsketten für Drehmaschinen



10. Machinery driving chain
Antriebsketten für Maschinenantriebe

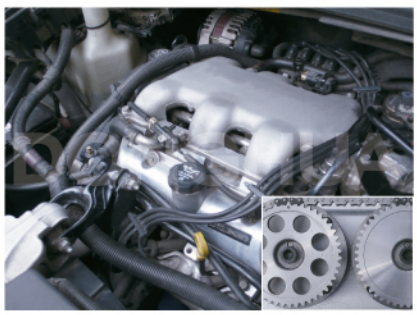

11. Engine timing chain
Steuerketten



12. ATV driving chain
ATV-Antriebsketten

SOME CHAINS FOR APPLICATION
BEISPIELE DER KETTENANWENDUNG



13. Step-chain for escalator
Fahrtreppenketten



14. Horizontal moving sidewalk escalator chain
Ketten für Fahrsteige



15. Conveyor chain for crawler asphalt paver
Förderketten für den Straßenbau



16. Conveyor chain for palm oil mill
Förderketten für die Palmölindustrie

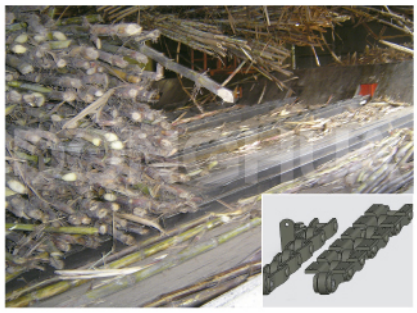

17. Conveyor chain for sugar refinery
Förderketten für die Zuckerindustrie

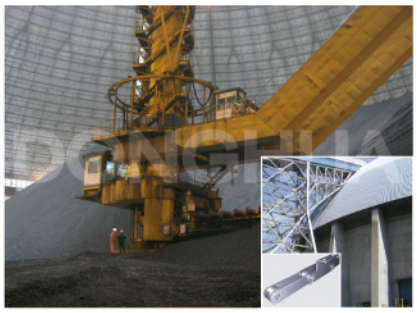

18. Conveyor chain for spherical coal yards
Förderketten für Kohlenlagerplatz



19. Conveyor chain for saw mill
Förderketten für die Holzindustrie

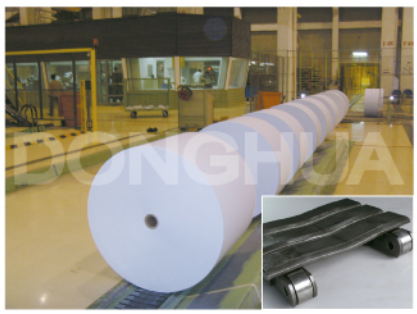

20. Conveyor chain for paper mill
Förderketten für die Papierindustrie



21. Conveyor chain for cement mill
Förderketten für die Zementindustrie



22. Conveyor chain for steel mill
Förderketten für die Stahlindustrie



23. Conveyor chain for steel mill
Förderketten für die Stahlindustrie

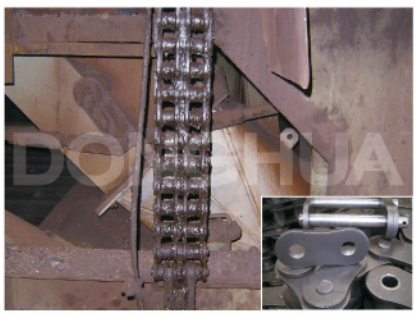

24. Steel mill balance chain
Ausgleichsketten für die Stahlindustrie

SOME CHAINS FOR APPLICATION
BEISPIELE DER KETTENANWENDUNG



25. Coupling chain
Kupplungsketten

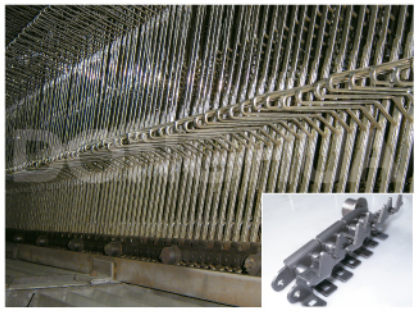

26. Conveyor chain for drying room
Rollenketten für Lackier- und Trocknungsanlagen



27. Auto pushing window chain
Rückensteife Ketten für Fensteröffner



28. Conveyor chain for automobile painting
Förderketten für Lackiersysteme in der Automobilindustrie



29. Car parking chain
Ketten für den Autoparklift



30. Leaf chain for sky stacker
Flyerketten für Containerkräne



31. Leaf chain for fork lift truck
Flyerketten für den Gabelstapler



32. Binding machinery chain
Ketten für Rundballenpressen



33. Corn harvester chain
Ketten für Maiserntemaschinen



34. Agriculture hoisting chain
Elevatorketten für Landmaschinen



35. Agriculture feed chain
Einzugsketten für Landmaschinen



36. Agriculture feed chain
Einzugsketten für Landmaschinen

YOUR EXPERIENCED AND POWERFUL PARTNER

IHR ERFAHRENER UND LEISTUNGSFÄHIGER PARTNER

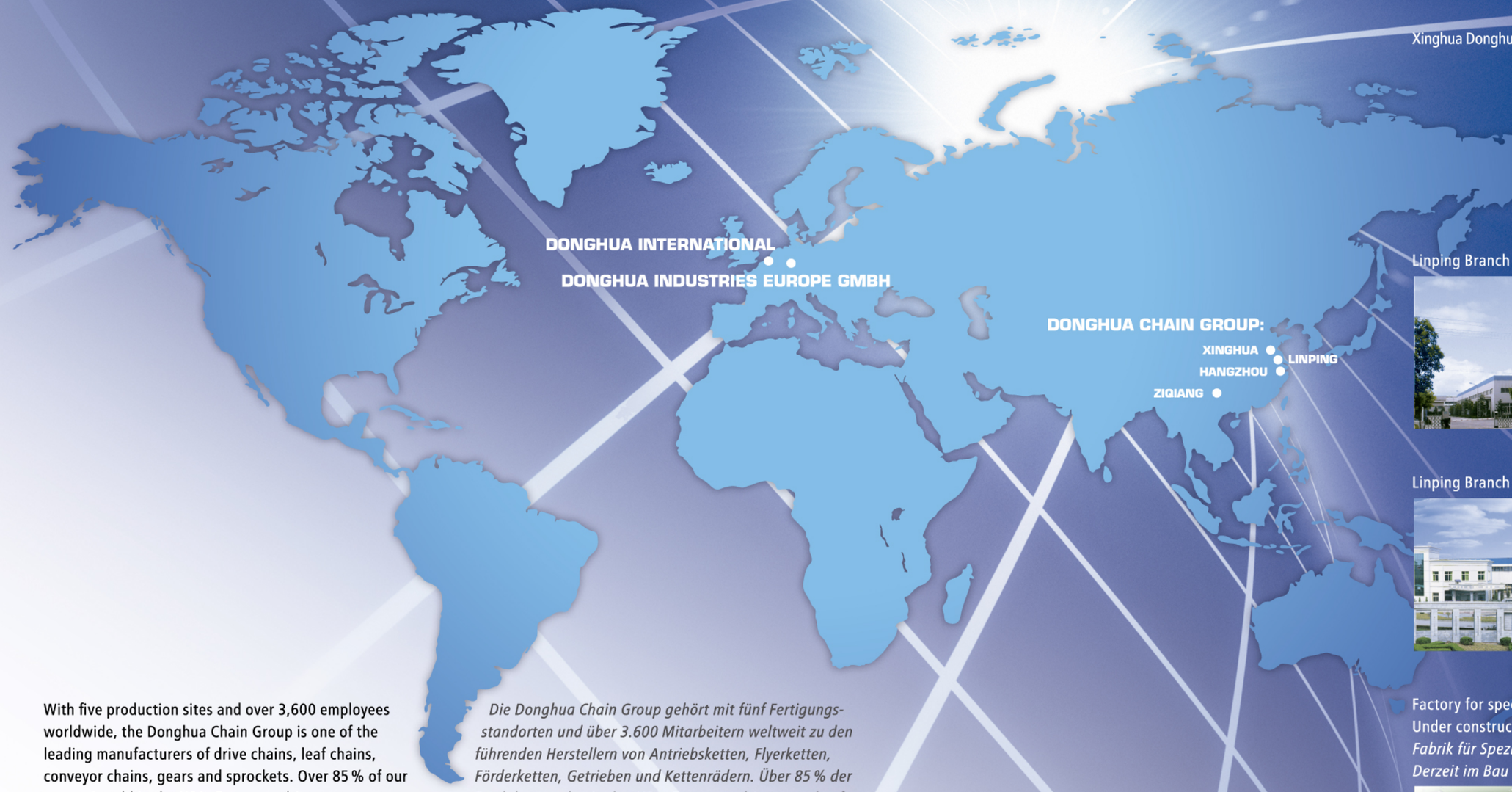

With five production sites and over 3,600 employees worldwide, the Donghua Chain Group is one of the leading manufacturers of drive chains, leaf chains, conveyor chains, gears and sprockets. Over 85 % of our output is sold in the USA, Europe and Japan.

We have the widest product range in this sector with over 10,000 specifications. Our focus is consistently on technical quality, logistical dependability and service – in short, on ensuring our customers are both satisfied and successful.

And this is why Donghua is now also moving into Europe.

Die Donghua Chain Group gehört mit fünf Fertigungsstandorten und über 3.600 Mitarbeitern weltweit zu den führenden Herstellern von Antriebsketten, Flyerketten, Förderketten, Getrieben und Kettenrädern. Über 85 % der Produkte werden in den USA, Europa und Japan verkauft.

Mit über 10.000 Spezifikationen verfügen wir über das größte Produktsortiment. Wir setzen konsequent auf technische Qualität, logistische Zuverlässigkeit und Service. Kurz – wir konzentrieren uns auf die Zufriedenheit und den Erfolg unserer Kunden.

Deshalb gibt es Donghua jetzt auch in Europa.

Hangzhou Headquarters • *Hangzhou, Hauptniederlassung*



Xinghua Donghua Gear Co., Ltd. • *Xinghua Donghua Gear Co., Ltd.*



Linping Branch S • *Linping Branch S*



Linping Branch N • *Linping Branch N*



Factory for special chains and premium chains in Ziqiang. Under construction – ready for use in autumn 2009
Fabrik für Spezialketten und Premium-Serien in Ziqiang. Derzeit im Bau – einsatzbereit im Herbst 2009



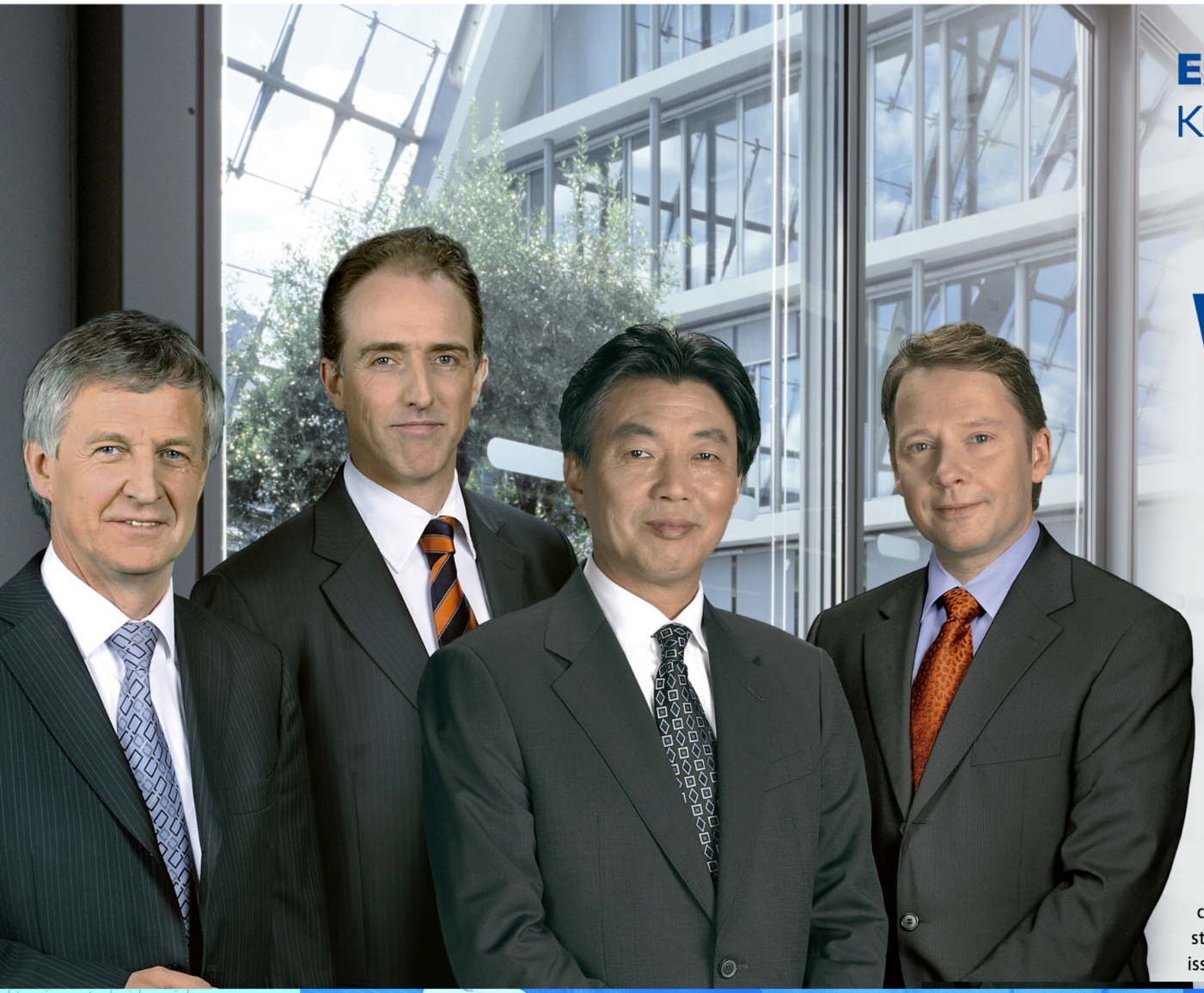

EXPERTISE AND RESPONSIBILITY
KOMPETENZ UND VERANTWORTUNG

WELCOME

TO DONGHUA EUROPE
BEI DONGHUA EUROPE

QUALITY CAN BE PLANNED

The Donghua Chain Group can look back on a long and successful corporate history. Together with our customers, we have been able to exploit the positive conditions over the last years to the full. The basis of our success is our focus on quality, continuous process optimisation and market-oriented innovation. What counts at our company are long-term and sustainable strategies, for future-proofing is one of the most important issues in the business world today. With a steady hand, we adapt to the challenges of the markets, making sound decisions and investing early. This strong combination of expertise and responsibility gives us and our customers the security of being well-placed for the future.

HIGH-QUALITY PRODUCTS – STRONG SERVICE

Customer satisfaction is the foundation stone of our business. For this reason, we have decided to invest heavily in Europe in order to reinforce our strategy of customer proximity. Our technical capability and financial independence give us the freedom to commit ourselves to this policy. Experienced and highly qualified employees stationed locally will in future be able to offer you even better service on this European platform.

Make the most of the advantages provided by a combination of high-quality products and convincing service.

QUALITÄT IST PLANBAR

Die Donghua Chain Group blickt auf eine lange erfolgreiche Geschäftsentwicklung zurück. Gemeinsam mit unseren Kunden konnten wir die positiven Bedingungen der letzten Jahre konsequent nutzen. Grundlage unseres Erfolgs sind die Konzentration auf Qualität, eine permanente Prozessoptimierung und eine marktorientierte Innovationskraft. Für unser Unternehmen zählen langfristige und nachhaltige Strategien. Denn Zukunftssicherung ist eines der wichtigsten Themen der heutigen Gesellschaft. Wir stellen uns mit ruhiger Hand auf

rkte ein, entscheiden sicher
e solide Verbindung aus
gibt uns und unseren Kunden
e Zukunft gut aufgestellt zu sein.

TUNG
len ist Basis unseres Geschäfts.
großen Investition in Europa
tschlossen, um unsere Strategie der Kundennähe mit
chdruck weiterzuverfolgen. Unsere technische Leistungs-
igkeit und finanzielle Unabhängigkeit geben uns die
iheit für dieses Engagement. Erfahrene und hoch qualifi-
rte Mitarbeiter vor Ort können Ihnen auf dieser europäi-
en Plattform in Zukunft noch besseren Service bieten.

tzen Sie den Vorteil einer Kombination von hochwertigen
odukten mit überzeugenden Dienstleistungen.

HOCHWERTIGE PRODUKTE –
ÜBERZEUGENDE DIENSTLEIST
Die Zufriedenheit unserer Kund
Wir haben uns daher zu einer g
ent
Na
fäh
Fre
zie
sch
Nu
Pro

FRANS MORSKATE
is managing director of DONGHUA International BV. He has decades of experience in the chain industry.

FRANS MORSKATE
ist Geschäftsführer bei DONGHUA International BV. Er blickt auf jahrzehntelange Erfahrung im Bereich Ketten zurück.

ERIK DIEPENHORST
is sales director of DONGHUA International BV.

ERIK DIEPENHORST
ist Vertriebsleiter bei DONGHUA International BV.

XUAN BI HUA
chairman and owner of Donghua Chain Group Co., Ltd., has decided to invest in Europe.

XUAN BI HUA
hat als Vorstandsvorsitzender und Inhaber der Donghua Chain Group Co., Ltd. entschieden, in Europa zu investieren.

CHRISTIAN KOLETZKI
is managing director of Donghua Industries Europe GmbH. He knows the European market-place at first hand.

CHRISTIAN KOLETZKI
ist Geschäftsführer bei Donghua Industries Europe GmbH. Er kennt den europäischen Markt aus erster Hand.

09

THE BEGINNING IN EUROPE
START IN EUROPA

cht nur Ihre
ngen sind ein
Partnerschaft.

den wir unsere
geschäft und



A WORD ABOUT CUSTOMER PROXIMITY
Every market has its own particular demands. It is not enough simply to supply good products. If you want to provide the best solution possible, you have to understand your customers, turn their desires into reality and offer technology and service as a single, complete product. Now we have taken up residence in Europe, we can provide our customers with comprehensive service in a language they understand and through people from their own cultural background. Consulting, engineering, modification and a wide product range now is available within the shortest delivery times.

SYNERGIES FROM THE WORD GO
With a strong process chain covering storage, logistics and sales, we offer the best possible operational reliability. We know the condition of every chain and at the same time all available options for maintenance and repair. After all, who else apart from the manufacturer is better able to assess

EIN WORT ZUR KUNDENNÄHE
Jeder Markt hat individuelle Anforderungen. Es reicht nicht, nur gute Produkte zu liefern. Wer die beste Lösung anbieten will, muss den Kunden verstehen, seine Wünsche umsetzen und Technologie und Service als Einheit anbieten. Mit unserer Präsenz in Europa erhalten unsere Kunden nun eine umfassende Dienstleistung in einer Sprache, die sie verstehen, mit Menschen aus ihrem Kulturkreis. Beratung, Engineering, Anpassungen, Verfügbarkeit der Produkte – all dies wird jetzt viel effizienter und schneller.

SYNERGIEN VON ANFANG AN
Mit einer überzeugenden Prozesskette inklusive Lagerhaltung, Logistik und Vertrieb bieten wir höchste Betriebssicherheit. Wir kennen den Zustand jeder Kette und gleichzeitig alle Optionen zur Instandhaltung und Instandsetzung. Denn wer könnte besser beurteilen als der Hersteller, was im Einzelfall zu tun ist? Unsere qualifizierten Fachkräfte sorgen dafür, dass der Fall der Fälle möglich

that we are able to supply all spare parts and components quickly and smoothly – in top quality.

A dependable after-sales-service, therefore, does not just guarantee your operating processes. Our service activities are designed to establish and foster a flexible and long-term partnership.

In cooperation with everyone involved, we are interlinking our service activities in Europe with your core business, contributing to maximisation of your efficiency in the process.

Ein verlässlicher Aftersales sichert daher ni
betrieblichen Prozesse. Unsere Dienstleistu
Angebot für eine flexible und langfristige P

In Kooperation mit allen Beteiligten verbin
Dienstleistungen in Europa mit Ihrem Kern
tragen so zu Ihrer Effizienz bei.





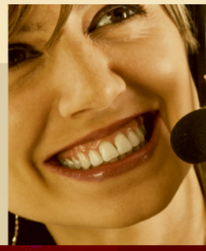



BEST PRACTICE – CUSTOMER FIRST
BEST PRACTICE – DEN KUNDEN IM BLICK

YOU

ARE OUR TOP PRIORITY
SIE STEHEN BEI UNS IM MITTELPUNKT

CLOSE, FAST AND EFFICIENT
Innovation and production cycles are becoming ever shorter. Technology must keep up with these intervals – and at reasonable costs, of course. For all of our customers demand competitive prices, too. As a technology partner, we make our customers' goals our own. We know the cost drivers, and work together with our customers to uncover potentials for optimisation. We plan the technical solutions right down to the last detail. And, of course, we take responsibility for implementing these solutions on schedule and for ensuring dependable logistics.

YOU ARE OUR TOP PRIORITY
As your development partner, we not only sell you chain and sprockets as a product, rather we offer a system that comprises customised solutions. Our presence in Europe now enables us to respond even faster to the needs and desires of our customers. Cooperating on equal terms, together we develop and discover useful products very quickly and with no information loss. We approach our customers – both spatially and in terms of content – with a comprehensive service package.

We use this speed and market proximity to extract quality and cost advantages and to enable us to act as a fully integrated consulting partner.

NAH, SCHNELL UND EFFIZIENT
Innovations- und Produktionszyklen werden immer kürzer. Technologie muss diesen Intervallen folgen können – natürlich zu vertretbaren Kosten. Denn alle unsere Kunden fordern auch wettbewerbsfähige Preise. Als Technologiepartner machen wir uns die Ziele unserer Kunden zu eigen. Wir kennen die Kostentreiber und decken Optimierungspotenziale gemeinsam auf. Die technischen Lösungen planen wir bis ins Detail. Und natürlich übernehmen wir Verantwortung für die termingerechte Umsetzung und eine zuverlässige Logistik.

SIE STEHEN BEI UNS IM MITTELPUNKT
Als Ihr Entwicklungspartner verkaufen wir nicht nur Kette und Kettenrad als Produkt, sondern bieten ein System aus individuellen Lösungen. Unsere Präsenz in Europa ermöglicht uns jetzt, noch schneller auf die Wünsche unserer Kunden zu reagieren. Auf Augenhöhe entwickeln wir gemeinsam und finden in sehr schnellen Schritten ohne Informationsverluste geeignete Produkte. Wir rücken mit einem umfassenden Leistungspaket an den Kunden heran. Räumlich und inhaltlich.

Aus dieser Schnelligkeit und Marktnähe ziehen wir unsere Qualitäts- und Kostenvorteile und werden so zum ganzheitlichen Beratungspartner.


On-site customer advice
Kundenberatung vor Ort


Close cooperation with the customer
Enge Zusammenarbeit mit dem Kunden


Mutual trust in the partnership – success for all partners • *Vertrauen in die Partnerschaft – gemeinsam erfolgreich sein*

QUALITY FROM EXPERIENCE
QUALITÄT AUS ERFAHRUNG

10 000
SPECIFICATIONS
SPEZIFIKATIONEN



ALWAYS OFFERING THE SAME SOLUTION IS MOST DEFINITELY NOT ONE OF OUR IDEAS
Our solutions are as diverse as our customers' wishes. Different requirements and applications lead to continuous development and optimisation of our technology. We have one of the largest product ranges worldwide in this sector with over 10,000 specifications.

IMMER DIE GLEICHE LÖSUNG IST KEINE IDEE VON UNS
Unsere Lösungen sind so vielfältig wie die Wünsche unserer Kunden. Unterschiedliche Anforderungen und Einsatzzwecke führen zu einer kontinuierlichen Weiterentwicklung und Optimierung unserer Technologie. Mit über 10.000 Spezifikationen verfügen wir heute weltweit über eines der breitesten Produktangebote.

WHAT IS CONVINCING IS ACTUAL USAGE
We all know that our products can only be as good as their weakest link. This is why our products offer a consistent, precisely defined quality standard. Extreme operating conditions in heavy-duty service in the mining industry, timber industry, in agricultural machinery or in sugar production make extremely high demands on the chain and sprockets. Durability, stability and safety are extremely important in the case of heavy forklift trucks and working platforms, too. With our special-purpose products for the food production industry, we meet the toughest of requirements for precision, and at the same time comply with the approval regulations applicable to the choice of lubricants.

WAS ÜBERZEUGT, IST DER EINSATZ
Wir alle wissen, dass unser Produkt immer nur so stark sein kann wie seine schwächste Stelle. Unsere Produkte bieten daher eine gleich bleibende Qualität auf exakt definiertem Niveau. Extreme Einsatzbedingungen im Heavy-duty-Betrieb des Bergbaus, der Holzindustrie, bei Landmaschinen oder in der Zuckerproduktion stellen höchste Anforderungen an Kette und Kettenrad. Langlebigkeit, Standfestigkeit und Sicherheit sind auch bei Schwerlaststaplern oder Arbeitsbühnen extrem wichtig. In der Lebensmittelproduktion erfüllen wir mit unseren Spezialprodukten höchste Anforderungen an Präzision und beachten zugleich die Zulassungsvorschriften bei der Wahl der Schmierstoffe.

Our products have been proving themselves in the field over many years. Even under extreme conditions, loads and temperatures, our chains keep what we promise: maximum operational reliability and resistance to wear.

Unsere Produkte haben sich seit Jahren im Einsatz bewährt. Auch unter extremen Bedingungen, Belastungen und Temperaturen halten unsere Ketten, was wir versprechen: höchste Betriebssicherheit und Verschleißfestigkeit.

OUR CHAINS STAND FOR MAXIMUM CUSTOMER BENEFIT
No matter what you ask us for, we either have a tried-and-tested product already in service or we will develop it for you.

UNSERE KETTEN STEHEN FÜR HÖCHSTEN KUNDENNUTZEN
Ganz gleich, was Sie anfragen werden – wir haben das bewährte Produkt schon im Einsatz oder wir entwickeln es für Sie.

SUCCESS = ENERGY x IDEAS
ERFOLG = KRAFT x IDEE

800

INNOVATIONS PER YEAR
INNOVATIONEN JÄHRLICH

OUR CONCEPT IS FOUNDED ON CONSTANT PROGRESS
We are a company that is constantly developing new products. Every year we bring around 800 variants and innovations to the market, conducting all safety inspections in our own test centres – applying great development expertise to realise solutions from the real world for the real world. Customers' requirements are incorporated directly into the technical implementation. A minimum of interfaces minimises sources of error. The teams of engineers, business professionals and service specialists all boast real knowledge of the market and interlock the wishes of our customers with the technical development of the products we manufacture for them.

This explains why our company is prepared to invest so heavily.

UNSER KONZEPT SETZT AUF PERMANENTEN FORTSCHRITT
Wir sind ein Unternehmen, das kontinuierlich neue Produkte entwickelt. So bringen wir jährlich etwa 800 Varianten und Neuheiten zur Marktreife – inklusive aller Sicherheitsprüfungen in unseren Testcentern. Mit einer überzeugenden Entwicklungskompetenz, die Lösungen aus der Praxis für die Praxis realisiert. So fließen die Kundenanforderungen direkt in die technische Umsetzung ein. Wenige Schnittstellen minimieren Fehlerquellen. Die Teams aus Ingenieuren, Kaufleuten und Servicefachleuten haben grundsätzlich Marktbezug und verzahnen so die Wünsche der Kunden mit der technischen Entwicklung.

So ist die hohe Innovationskraft unseres Unternehmens kein Zufall, sondern nur konsequent.

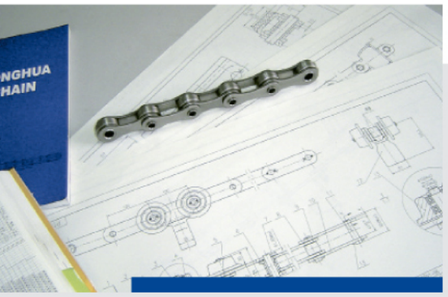

Development of customised solutions
Entwicklung kundenspezifischer Lösungen


Optimisation down to the last detail
Optimierung bis ins Detail


Application of the latest test methods
Einsatz neuester Prüfverfahren

VERY COMFORTING: ALWAYS A MARKET LEADER
SEHR BERUHIGEND: IMMER SPITZE


WIT ASSESSMENT
CERTIFICATE OF REGISTRATION
This is to certify that the Management System established by
Hangzhou Donghua Chain Group Co., Ltd.
No.218, Jichang Road, Hangzhou City, Zhejiang Province, P.R.China
Has been assessed to comply with the requirements of the international standard
ISO14001:2004
Scope of certification
Environmental Management Related to Design and Manufacture of Standard Roller Chains, Bush Chains and Special Chains
NO:15/09E0131R20 DATE OF ISSUE: FEB.9.2009 VALID UNTIL: FEB.8.2012
ISO14001

ISO 14001 certificate
ISO-14001-Zertifikat


WIT ASSESSMENT
CERTIFICATE OF REGISTRATION
This is to certify that the Management System established by
Hangzhou Donghua Chain Group Co., Ltd.
No.218, Jichang Road, Hangzhou, Zhejiang, P.R.China
Xingwang Industrial City, Economic Development Zone, Yuhang District, Hangzhou, Zhejiang, P.R.China
Has been assessed to comply with the requirements of the international standard
ISO9001:2000
Scope of certification
Design and Manufacture of Standard Roller Chains, Bush Chains and Special Chains
NO:15/09Q0130R30 DATE OF ISSUE: FEB.9.2009 VALID UNTIL: NOV.14.2010
ISO9000

ISO 9001:2000 certificate
ISO-9001:2000-Zertifikat


CERTIFICATE
DQS GmbH
Deutsche Gesellschaft zur Zertifizierung von Managementsystemen
hereby certifies that the company
Hangzhou Donghua Chain Group Co., Ltd.
DONGHUA
No. 218 Jichang Road
310021, Hangzhou, Zhejiang
P.R.China
for the scope
Design, manufacture of chain products for automotive industry
has implemented and maintains a
Quality Management System.
An audit, conducted in accordance with the "Rules for certification bodies to ISO/TS 16949:2002 Third Edition"
and documented in a report, has verified that this quality management system fulfils the requirements of the following ISO Technical Specification:
ISO/TS 16949:2002
Second Edition March 2002
(with product design)
Certification audit: 2008-12-27- 2008-12-28
Certification decision 2009-01-20
This certificate is valid until 2012-01-19
Certificate Registration No. 322973 TS2
IATF No. 0078489
Issued in Frankfurt am Main, Germany 2009-01-20
Page 1 / 2

ISO/TS 16949 certificate
ISO/TS-16949-Zertifikat

To sum up, we have all the relevant and internationally required quality certificates:

From ISO 9001:2000 QM certification through ISO 14001 (which documents the sustainability and environmental compatibility of our production and waste disposal processes) to the ISO/TS 16949 quality requirements for the automotive industry.

Other specialist certificates from the American Petroleum Institute, the Certificate of Conformity for Measurement Management Systems and the Export Inspection Certificate prove that we are more than capable of satisfying the quality benchmarks laid down by the industry.

Ask us if we can meet your quality standards – we can give you reassuring answers.

Um es kurz auf den Punkt zu bringen: Wir verfügen über alle relevanten und international geforderten Qualitätszertifikate.

Von der ISO-9001:2000-QM-Zertifizierung über das ISO-14001-Zertifikat, das die Nachhaltigkeit und Umweltverträglichkeit unserer Produktions- und Entsorgungsprozesse dokumentiert, bis zur ISO/TS-16949-Qualitätsanforderung der Automobilindustrie verfügen wir über die international geforderten Qualitätsnachweise.

Weitere Spezialzertifikate des American Petrol Institute, das Certificate of Conformity for Measurement Management Systems sowie das Export-Inspection-Zertifikat belegen, dass wir uns den Qualitätsmaßstäben der Industrie souverän stellen können.

Fragen Sie uns nach Ihren Qualitätsstandards – wir geben Ihnen beruhigende Antworten.


Certificate of Authority to use the Official API Monogram
License Number: 7F-0022
HANGZHOU DONGHUA CHAIN GROUP CO., LTD.
Xingwang Industrial Zone
Yuhang District
Hangzhou, Zhejiang
People's Republic of China
American Petroleum Institute
Effective Date: JULY 9, 2007
Expiration Date: JULY 9, 2010

API certificate
API-Zertifikat


CERTIFICATE OF CONFORMITY
(Transcript)
测量管理体系认证证书
CERTIFICATE OF CONFORMITY FOR MEASUREMENT MANAGEMENT SYSTEMS

Export Inspection Certificate and Certificate of Conformity for Measurement Management Systems • *Export-Inspection-Zertifikat und Certificate of Conformity for Measurement Management Systems*



INNOVATING FOR YOUR SUCCESS
INNOVATION FÜR IHREN ERFOLG

400

HIGHLY SKILLED AND MOTIVATED ENGINEERS
HOCH QUALIFIZIERTE INGENIEURE

INTERDISCIPLINARY TEAMS TO FIND THE BEST SOLUTION
A workforce of 400 technicians and engineers is genuine proof of our belief in quality and innovation. All of our specialists are well grounded in day-to-day, real-world practice, working in sales, marketing, development, production, quality assurance and controlling. In addition to their technical know-how and experience, we also put great emphasis on their creativity and flexibility. Our best employees are regularly grouped into innovation teams that we can call on to handle specific customer projects. What is more, we regularly regroup these teams to ensure on the one hand that our customers are provided with the best custom solution for their particular requirements and on the other hand to promote a culture of constant optimisation throughout our company.

Perhaps this is the reason we are more successful than our competitors. And now in Europe, too.

FROM THE REAL WORLD FOR THE REAL WORLD
This knowledge pool provides us with a constant flow of good ideas from all fields – CAD, materials testing, metal finishing, specification, mechanical engineering, prototype construction, test-bench testing, controlling and marketing. This is our concept for continuous optimisation with the aim of promoting customer orientation, speed and efficiency.

And we certainly will not be giving away any business secrets if we tell you that this concept really does work!

INTERDISZIPLINÄRE TEAMS FÜR DIE BESTE LÖSUNG
400 Techniker und Ingenieure stehen für unsere Qualität und Innovationskraft. Alle unsere Spezialisten sind in der täglichen Praxis gut geerdet. Sie arbeiten im Vertrieb, in der Entwicklung, in der Produktion, in der Qualitätssicherung und im Controlling. Neben dem technischen Wissen und der Erfahrung ist für uns besonders wichtig, dass sie ihre Kreativität und Flexibilität einsetzen. Schließlich stellen wir unsere besten Mitarbeiter immer wieder neu zu Innovationsteams zusammen, damit sie auf Abruf in Arbeitsgruppen für spezielle Kundenprojekte arbeiten können. Diese Teams bilden wir nicht nur deshalb immer neu, damit unsere Kunden die jeweils beste individuelle Lösung erhalten, sondern auch, um in allen Bereichen eine Kultur der ständigen Optimierung zu fördern.

Vielleicht sind wir deshalb etwas erfolgreicher. Jetzt auch in Europa.

AUS DER PRAXIS FÜR DIE PRAXIS
So erhalten wir aus einem Wissens-Pool ständig einen Strom von guten Ideen – aus CAD, Materialprüfung, Metallveredelung, Spezifikation, Maschinenbau, Prototypenbau, vom Teststand, aus dem Controlling oder dem Vertrieb. Dies ist unser Konzept für eine kontinuierliche Optimierung im Sinne von Kundenorientierung, Schnelligkeit, Wirtschaftlichkeit.

Wir verraten sicher kein Geschäftsgeheimnis, wenn wir sagen: Es funktioniert.



Innovation teams set up for specific requirements
Anforderungsspezifische Innovationsteams



Design and simulation
Konstruktion und Simulation



Quality control as a function of process optimisation • *Qualitätsüberprüfung im Rahmen der Prozessoptimierung*



3D CAD system • 3D-CAD-System

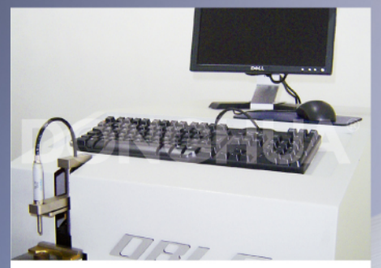

Spectrometer • Spektrometer



Mill • Walzwerk

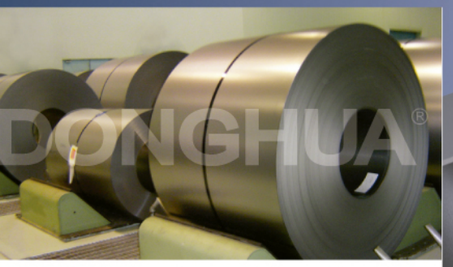

Coil storage • Coil-Lagerung

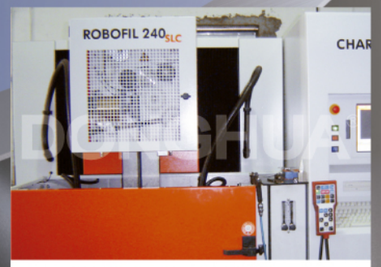

Wire EDM • Drahterodiermaschine



Automatic CNC lathes • CNC-Drehautomaten



Punching shop • Stanzerei

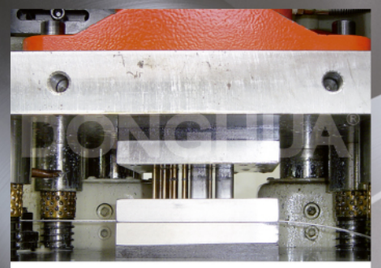

Prec. progressive die • Folgeschnittwerkzeug



Pin manufacture • Bolzenherstellung



Multi-purpose batch furnaces • Kammeröfen



Mesh belt conveyor furnaces • Durchlauföfen



Ball calibration • Kugelkalibrieren



Special lubrication • Sonderfettung



Assembling • Montage



Shipping department • Versandbereich

MORE, BIGGER, FASTER?
YES, BUT MAKE IT PERFECT, PLEASE
MEHR, GRÖSSER, SCHNELLER?
JA, ABER BITTE PERFEKT

250 000 m²

PRODUCTION AREA
PRODUKTIONSFLÄCHE

OUR SERVICE PORTFOLIO IS AS ALL-EMBRACING AS OUR TASKS

Whether you order a one-off prototype or a full-scale production run, our quality standards live up to all requirements. For we cover all parts of the production process from the mill through component manufacture to the finished product. Good to know – so far, our capacity knows no limits. Our production process is characterised by know-how and a constant readiness to innovate. We actively integrate best-practice models and the exchange of knowledge among our expert professionals in order to continuously optimise all manufacturing processes engaged in at our five plants.

PUTTING THOUGHT INTO THE PROCESS CHAIN – TO MAKE BETTER CHAIN

This also demands that we invest in innovative production technology and systematically expand our production expertise. By employing state-of-the-art equipment, extensive materials testing, test series and prototype systems, we ensure the quality and efficient manufacture of our products right through to a high level of automation in series production.

FACTORY WITHIN A FACTORY

We have built separate plants for producing chain types that demand unique production processes:

- Leaf chains
- Conveyor chains
- Agricultural chains
- Special-purpose chains

UNSER LEISTUNGSSPEKTRUM IST SO UMFASSEND WIE IHRE AUFGABEN

Ob Sie einen Prototyp als Unikat bestellen oder eine Großserie beauftragen – unser Qualitätsanspruch hält allen Anforderungen stand. Denn wir decken den Herstellungsprozess vom Walzwerk über die Teilefertigung bis zum Endprodukt komplett ab. Gut zu wissen – unsere Kapazität kennt bisher keine Grenzen. Unser Fertigungsprozess ist geprägt von Know-how und ständiger Innovationsbereitschaft. Best-Practice-Modelle und den Wissensaustausch unserer Fachleute integrieren wir aktiv in die Produktion und optimieren so kontinuierlich alle Herstellungsprozesse an unseren fünf Standorten.

IN DIE KETTE HINEINGEDACHT

Dies verlangt auch, in eine innovative Herstellungstechnologie zu investieren und die Produktionskompetenz konsequent zu erweitern. Mit modernstem Equipment, umfangreichen Werkstoffprüfungen, Testreihen und prototypischen Anlagen sichern wir die Qualität und effiziente Fertigung unserer Produkte bis hin zu einem hohen Automatisierungsgrad in der Großserienproduktion.

FABRIK IN DER FABRIK

Wir haben eigene Produktionsstätten für Kettentypen errichtet, die individuellen Fertigungsprozessen unterliegen:

- *Flyerketten*
- *Förderketten*
- *Landmaschinen*
- *Spezialketten*





AGRICULTURAL CHAINS
LANDMASCHINENKETTEN

SH series high strength heavy duty short pitch roller chains
Verstärkte Hochleistungsrollenketten (SH Serie)

SH series roller chains have a greater ultimate tensile strength (about an additional 25%-35%)over ANSI standard roller chains by using through hardened pins,these chains also provide a greater shock load resistance, The dimensions of the chain are identical to ANSI heavy series standard roller chains.

Rollenketten (SH Serie) mit durchgehärteten Bolzen haben eine höhere Bruchkraft (25%-35%) gegenüber ANSI-Standardrollenketten. Sie weisen auch eine höhere Dauerschwingungsfestigkeit auf. Ihre Abmessungen und Parameter entsprechen denen der verstärkten ANSI-Standardrollenketten.

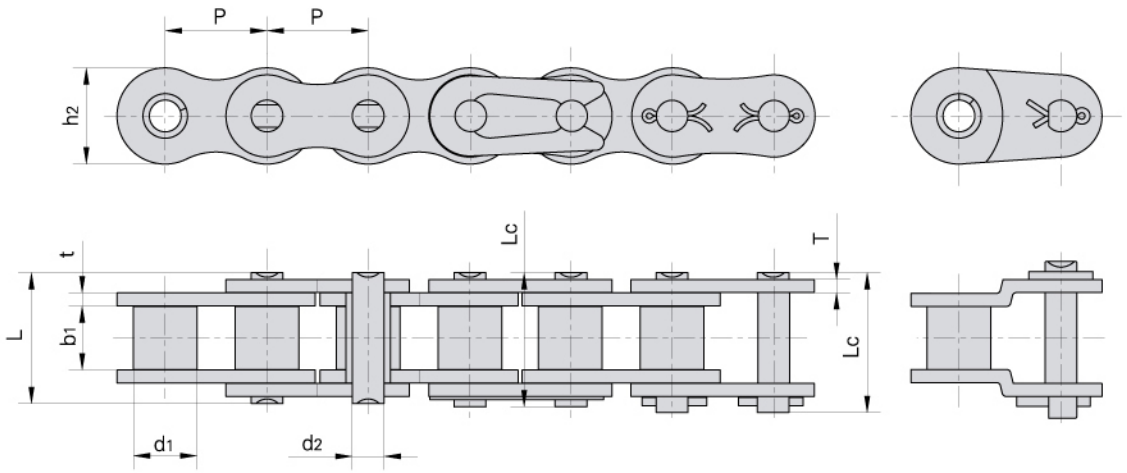

Donghua Chain No. *Donghua Ketten Nr.*	Pitch *Teilung*	Roller diameter *Rollen-durch-messer*	Width between inner plates *Innere Breite*	Pin diameter *Bolzen-durch-messer*	Pin length *Bolzen-länge*		Inner plate depth *Innen-laschen-höhe*	Plate thickness *Laschen-dicke*	Ultimate tensile strength *Min. Bruchkraft*	Average tensile strength *Durchschn. Bruchkraft*	Weight per meter *Gewicht*
	P	d_1 max	b_1 min	d_2 max	L max	Lc max	h_2 max	t/T max	Q min	Q_0	q
	mm	mm	mm	mm	mm	mm	mm	mm	kN/LB	kN	kg/m
*25SH	6.350	3.30	3.18	2.01	9.0	–	6.00	1.04	5.09/1157	5.6	0.17
*35SH	9.525	5.08	4.77	3.58	13.3	14.3	9.00	1.50	11.0/2500	13.6	0.41
40SH	12.700	7.95	7.85	3.96	18.8	19.9	12.00	2.03	22.4/5091	24.8	0.82
50SH	15.875	10.16	9.40	5.08	22.1	23.4	15.09	2.42	30.4/6909	36.2	1.25
60SH	19.050	11.91	12.57	5.94	29.2	31.6	18.00	3.25	44.1/10023	50.4	1.87
80SH	25.400	15.88	15.75	7.92	36.2	37.7	24.00	4.00	88.2/20045	93.0	3.10
100SH	31.750	19.05	18.90	9.53	43.6	46.9	30.00	4.80	116.6/26500	129.1	4.52
120SH	38.100	22.23	25.22	11.10	53.5	57.5	35.70	5.60	158.2/35954	175.3	6.60
140SH	44.450	25.40	25.22	12.70	57.6	62.2	41.00	6.40	206.0/46818	266.5	8.30
160SH	50.800	28.58	31.55	14.27	68.2	73.0	47.80	7.20	274.0/62273	293.0	10.30
200SH	63.500	39.68	37.85	19.85	86.6	93.5	60.00	9.50	506.1/115023	562.3	19.16
#5H63	19.050	14.29	9.55	7.30	27.9	–	19.60	4.15/3.25	65.7/14932	73.0	2.62
#C70SH	22.225	15.60	14.30	7.94	36.6	–	22.60	4.8/4.0	88.25/20056	98.0	3.75
955	28.575	21.30	17.46	11.10	46.8	–	30.60	6.4/5.6	142.1/35635	156.8	7.95

*Bushing chain: $d_1$in the table indicate the external diameter of the bushing
**Buchsenketten: In dieser Tabelle zeigt d_1 den Außendurchmesser der Buchsen.*
#Straight side plates
#Gerade Laschen

SP series high strength short pitch roller chains
Verstärkte Hochleistungsrollenketten (SP Serie)

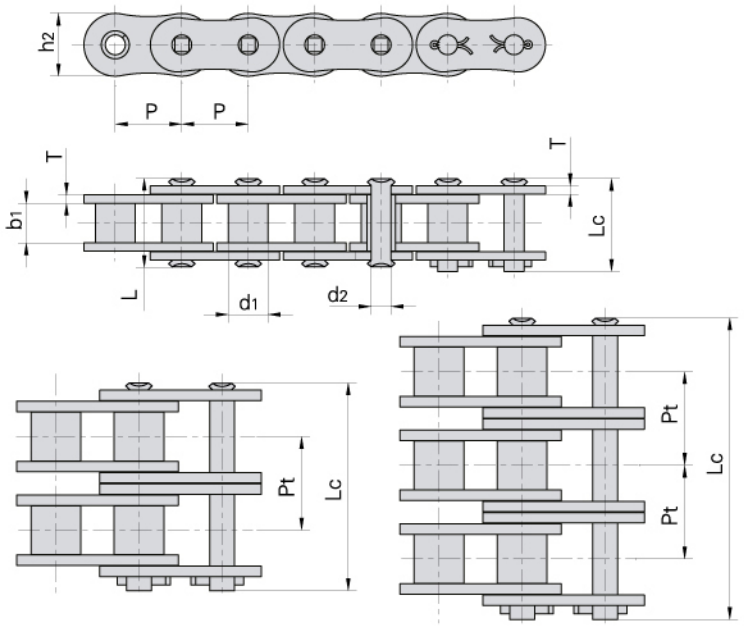

Donghua Chain No. *Donghua Ketten Nr.*	Pitch *Teilung*	Roller diameter *Rollen-durch-messer*	Width between inner plates *Innere Breite*	Pin diameter *Bolzen-durch-messer*	Pin length *Bolzen-länge*		Inner plate depth *Innen-laschen-höhe*	Plate thickness *Laschen-dicke*	Transverse pitch *Mitten-abstand*	Ultimate tensile strength *Min. Bruchkraft*	Average tensile strength *Durchschn. Bruchkraft*	Weight per meter *Gewicht*
	P	d_1 max	b_1 min	d_2 max	L max	Lc max	h_2 max	T	Pt	Q min	Q_0	q
	mm	mm	mm	mm	mm	mm	mm	mm	mm	kN/LB	kN	kg/m
80SP–1	25.40	15.88	15.75	7.94	32.7	36.5	24.1	3.2	–	77.5/17434	85.3	2.86
100SP–1	31.75	19.05	18.95	9.54	40.4	44.7	30.1	4.0	–	115.5/25982	127.0	4.21
120SP–1	38.10	22.23	25.22	11.11	50.3	54.3	36.2	4.8	–	165.0/37118	186.0	6.36
140SP–1	44.45	25.40	25.22	12.71	54.4	59.0	42.2	5.6	–	222.7/50098	245.0	8.04
160SP–1	50.80	28.58	31.55	14.29	64.8	69.6	48.2	6.4	–	285.5/64215	314.0	10.80
200SP–1	63.50	39.68	37.85	19.85	80.3	87.2	60.3	8.0	–	445.5/100208	490.0	18.00
80SP–2	25.40	15.88	15.75	7.94	62.7	65.8	24.1	3.2	29.29	155.0/34868	170.6	5.68
100SP–2	31.75	19.05	18.95	9.54	76.4	80.5	30.1	4.0	35.76	231.0/51965	255.0	8.34
120SP–2	38.10	22.23	25.22	11.11	95.8	99.7	36.2	4.8	45.44	339.0/76260	373.0	12.63
140SP–2	44.45	25.40	25.22	12.71	103.3	107.9	42.2	5.6	48.87	445.5/100218	490.0	15.92
160SP–2	50.80	28.58	31.55	14.29	123.3	128.1	48.2	6.4	58.55	571.0/128430	628.0	21.43
200SP–2	63.50	39.68	37.85	19.85	151.9	158.8	60.3	8.0	71.55	892.0/200621	981.0	35.00
80SP–3	25.40	15.88	15.75	7.94	91.7	95.1	24.1	3.2	29.29	232.5/52302	255.9	8.18
100SP–3	31.75	19.05	18.95	9.54	112.2	116.3	30.1	4.0	35.76	347.3/78128	382.0	12.47
120SP–3	38.10	22.23	25.22	11.11	141.4	145.2	36.2	4.8	45.44	508.0/114278	559.0	18.90
140SP–3	44.45	25.40	25.22	12.71	152.2	156.8	42.2	5.6	48.87	668.0/150271	735.0	23.84
160SP–3	50.80	28.58	31.55	14.29	181.8	186.6	48.2	6.4	58.55	855.5/192441	941.0	32.10
200SP–3	63.50	39.68	37.85	19.85	223.5	230.4	60.3	8.0	71.55	1336.4/300633	1470.0	52.50

SP series high strength heavy duty short pitch roller chains
Verstärkte Hochleistungsrollenketten (SP Serie)

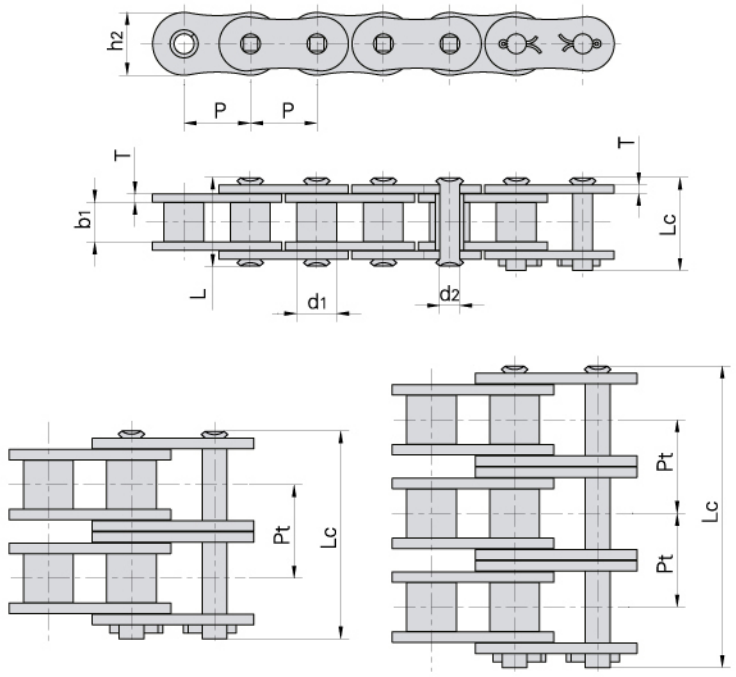

Donghua Chain No. *Donghua Ketten Nr.*	Pitch *Teilung*	Roller diameter *Rollen-durch-messer*	Width between inner plates *Innere Breite*	Pin diameter *Bolzen-durch-messer*	Pin length *Bolzen-länge*		Inner plate depth *Innen-laschen-höhe*	Plate thickness *Laschen-dicke*	Transverse pitch *Mitten-abstand*	Ultimate tensile strength *Min. Bruchkraft*	Average tensile strength *Durchschn. Bruchkraft*	Weight per meter *Gewicht*
	P	d_1 max	b_1 min	d_2 max	L max	Lc max	h_2 max	T	Pt	Q min	Q_0	q
	mm	mm	mm	mm	mm	mm	mm	mm	mm	kN/LB	kN	kg/m
80HSP–1	25.40	15.88	15.75	7.94	36.2	38.9	24.1	4.0	–	89.2/20066	98.1	3.36
100HSP–1	31.75	19.05	18.95	9.54	43.6	46.9	30.1	4.8	–	131.8/29649	145.0	4.90
120HSP–1	38.10	22.23	25.22	11.11	53.5	57.5	36.2	5.6	–	176.0/39592	196.0	7.12
140HSP–1	44.45	25.40	25.22	12.71	57.6	62.2	42.2	6.4	–	231.9/52149	255.0	8.88
160HSP–1	50.80	28.58	31.55	14.29	68.2	73.0	48.2	7.2	–	294.5/66260	324.0	11.72
200HSP–1	63.50	39.68	37.85	19.85	86.6	93.5	60.3	9.5	–	543.6/122295	598.0	19.80
80HSP–2	25.40	15.88	15.75	7.94	68.8	72.0	24.1	4.0	32.59	178.4/40132	196.2	6.65
100HSP–2	31.75	19.05	18.95	9.54	82.7	86.0	30.1	4.8	39.09	263.6/59299	290.0	9.71
120HSP–2	38.10	22.23	25.22	11.11	102.4	106.4	36.2	5.6	48.87	356.4/80175	392.0	14.12
140HSP–2	44.45	25.40	25.22	12.71	109.8	114.4	42.2	6.4	52.20	463.6/104300	510.0	17.38
160HSP–2	50.80	28.58	31.55	14.29	130.1	134.9	48.2	7.2	61.90	588.0/132275	647.0	23.00
200HSP–2	63.50	39.68	37.85	19.85	164.9	171.8	60.3	9.5	78.31	1091.0/245429	1200.0	38.50
80HSP–3	25.40	15.88	15.75	7.94	101.4	104.6	24.1	4.0	32.59	267.6/60200	294.3	9.95
100HSP–3	31.75	19.05	18.95	9.54	121.8	125.1	30.1	4.8	39.09	395.4/88948	435.0	14.53
120HSP–3	38.10	22.23	25.22	11.11	151.2	155.2	36.2	5.6	48.87	534.5/120250	588.0	21.12
140HSP–3	44.45	25.40	25.22	12.71	162.0	166.6	42.2	6.4	52.20	695.5/156448	765.0	25.88
160HSP–3	50.80	28.58	31.55	14.29	192.0	196.8	48.2	7.2	61.90	882.7/198576	971.0	34.22
200HSP–3	63.50	39.68	37.85	19.85	243.2	250.1	60.3	9.5	78.31	1627.3/366073	1790.0	57.29

SP series high strength short pitch roller chains
Verstärkte Hochleistungsrollenketten (SP Serie)

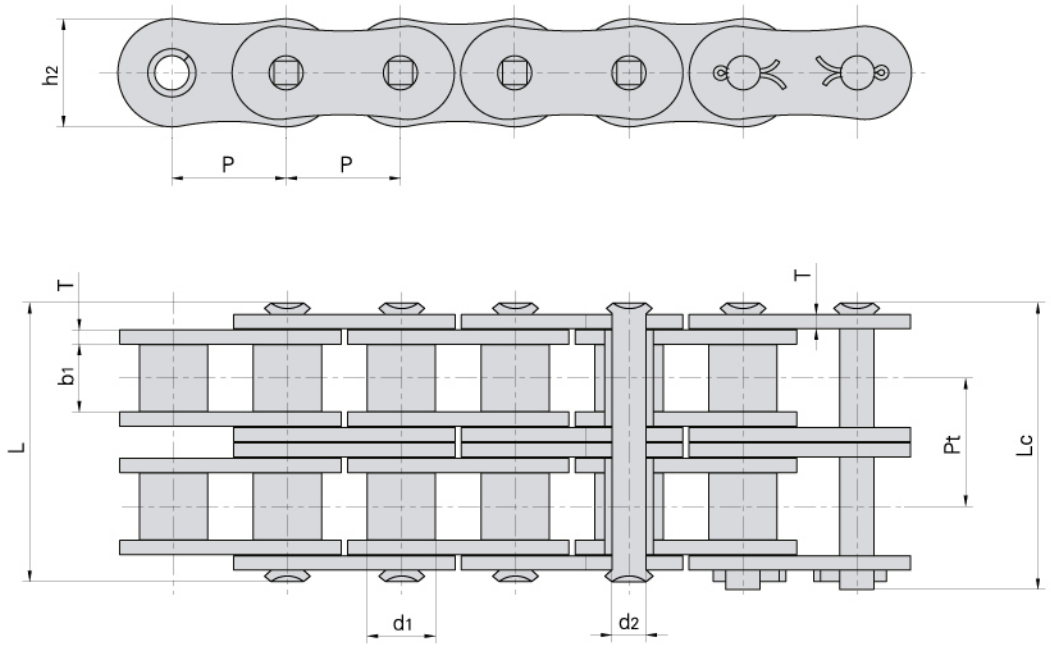

Donghua Chain No. *Donghua Ketten Nr.*	Pitch *Teilung*	Roller diameter *Rollen-durch-messer*	Width between inner plates *Innere Breite*	Pin diameter *Bolzen-durch-messer*	Pin length *Bolzen-länge*		Inner plate depth *Innen-laschen-höhe*	Plate thickness *Laschen-dicke*	Transverse pitch *Mitten-abstand*	Ultimate tensile strength *Min. Bruchkraft*	Average tensile strength *Durchschn. Bruchkraft*	Weight per meter *Gewicht*
	P	d_1 max	b_1 min	d_2 max	L max	Lc max	h_2 max	T	Pt	Q min	Q_0	q
	mm	mm	mm	mm	mm	mm	mm	mm	mm	kN/LB	kN	kg/m
80SPE–2	25.40	15.88	15.75	7.94	62.7	65.8	24.1	3.2	29.29	155.0/34868	170.6	5.68
100SPE–2	31.75	19.05	18.95	9.54	76.4	80.5	30.1	4.0	35.76	231.0/51965	255.0	8.34
120SPE–2	38.10	22.23	25.22	11.11	95.8	99.7	36.2	4.8	45.44	339.0/76260	373.0	12.63
140SPE–2	44.45	25.40	25.22	12.71	103.3	107.9	42.2	5.6	48.87	445.5/100218	490.0	15.92
160SPE–2	50.80	28.58	31.55	14.29	123.3	128.1	48.2	6.4	58.55	571.0/128430	628.0	21.43
200SPE–2	63.50	39.68	37.85	19.85	151.9	158.8	60.3	8.0	71.55	892.0/200621	981.0	35.00
80HSPE–2	25.40	15.88	15.75	7.94	68.8	72.0	24.1	4.0	32.59	178.4/40132	196.2	6.65
100HSPE–2	31.75	19.05	18.95	9.54	82.7	86.0	30.1	4.8	39.09	263.6/59299	290.0	9.71
120HSPE–2	38.10	22.23	25.22	11.11	102.4	106.4	36.2	5.6	48.87	356.4/80175	392.0	14.12
140HSPE–2	44.45	25.40	25.22	12.71	109.8	114.4	42.2	6.4	52.20	463.6/104300	510.0	17.38
160HSPE–2	50.80	28.58	31.55	14.29	130.1	134.9	48.2	7.2	61.90	588.0/132275	647.0	23.00
200HSPE–2	63.50	39.68	37.85	19.85	164.9	171.8	60.3	9.5	78.31	1091.0/245429	1200.0	38.50

Note: central plates are press fit assembly.
Hinweis: Zwischenlaschen werden mit Presssitz montiert.

Walking tractor chains
Ketten für den Einachstraktor

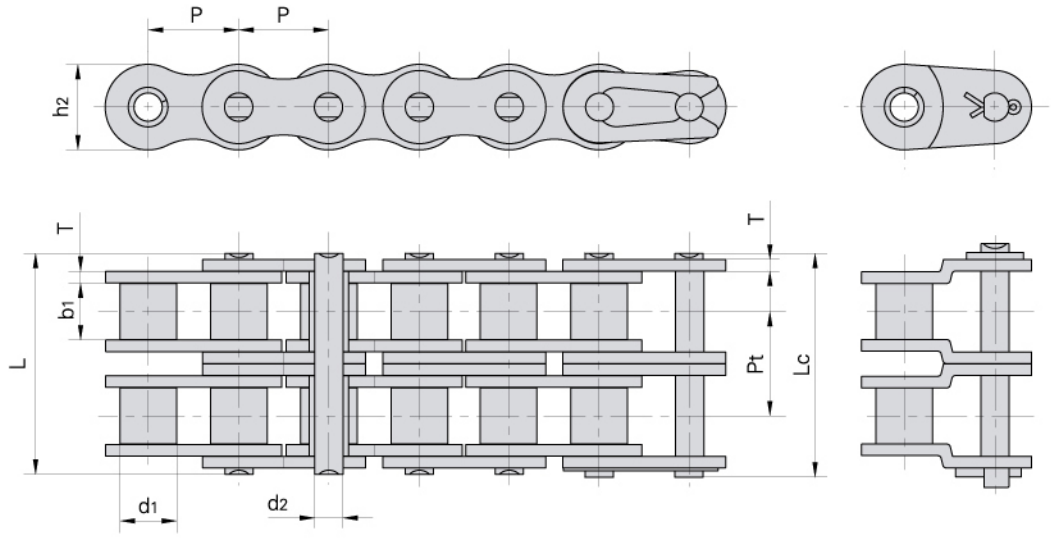

DIN/ISO Chain No. *DIN/ISO Ketten Nr.*	Pitch *Teilung*	Roller diameter *Rollen-durch-messer*	Width between inner plates *Innere Breite*	Pin diameter *Bolzen-durch-messer*	Pin length *Bolzen-länge*		Inner plate depth *Innen-laschen-höhe*	Plate thickness *Laschen-dicke*	Transverse pitch *Mitten-abstand*	Ultimate tensile strength *Min. Bruchkraft*	Average tensile strength *Durchschn. Bruchkraft*	Weight per meter *Gewicht*
	P	d_1 max	b_1 min	d_2 max	L max	Lc max	h_2 max	T max	P_t	Q min	Q_0	q
	mm	mm	mm	mm	mm	mm	mm	mm	mm	kN/LB	kN	kg/m
08B–2	12.70	8.51	7.75	4.45	31.2	32.2	11.8	1.60	13.92	32.0/7273	38.7	1.34
12A–2	19.05	11.91	12.57	5.94	48.8	50.5	18.0	2.42	22.78	63.6/14455	82.1	2.92
12AH–2	19.05	11.91	12.57	5.94	55.3	57.1	18.0	3.25	26.11	63.6/14455	84.5	3.71

Recommend 12AH-2 used for ratary tillage chain!
12AH-2 verstärkte Ketten empfehlen sich zur Anwendung in den Rotavatoren.
12AH-2 heavy duty chain suit for any solid soil!
12AH-2 verstärkte Ketten sind geeignet für rotierende Bearbeitung aller Massivbodenarten.



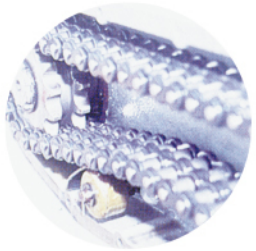

Partial photograph of ratary tillage chain
Detailansicht der Rotavatorketten

Combine chains
Ketten für den Mähdrescher

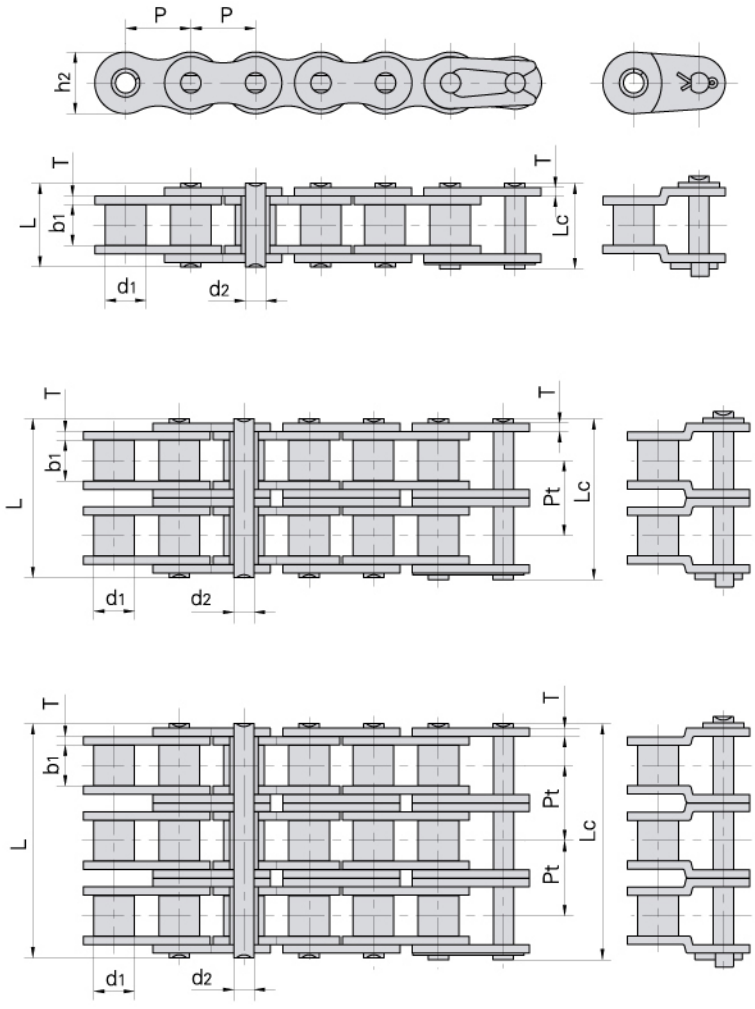

DIN/ISO Chain No. *DIN/ISO Ketten Nr.*	Pitch *Teilung*	Roller diameter *Rollen-durch-messer*	Width between inner plates *Innere Breite*	Pin diameter *Bolzen-durch-messer*	Pin length *Bolzen-länge*		Inner plate depth *Innen-laschen-höhe*	Plate thickness *Laschen-dicke*	Transverse pitch *Mitten-abstand*	Ultimate tensile strength *Min. Bruchkraft*	Average tensile strength *Durchschn. Bruchkraft*	Weight per meter *Gewicht*
	P	d_1 max	b_1 min	d_2 max	L max	Lc max	h_2 max	T max	Pt	Q min	Q_0	q
	mm	mm	mm	mm	mm	mm	mm	mm	mm	kN/LB	kN	kg/m
08B–1	12.700	8.51	7.75	4.45	16.7	18.2	11.80	1.60	–	18.0/4091	19.4	0.69
08B–3	12.700	8.51	7.75	4.45	45.1	46.1	11.80	1.60	13.92	47.5/10795	57.8	2.03
10A–1	15.875	10.16	9.40	5.08	20.7	22.2	15.09	2.03	–	22.2/5045	29.4	1.02
10A–2	15.875	10.16	9.40	5.08	38.9	40.4	15.09	2.03	18.11	44.4/10091	58.1	2.00
12A–1	19.050	11.91	12.57	5.94	25.9	27.7	18.00	2.42	–	31.8/7227	41.5	1.50
16A–1	25.400	15.88	15.75	7.92	32.7	35.0	24.00	3.25	–	56.7/12886	69.4	2.60
16AH–1	25.400	15.88	15.75	7.92	36.2	37.7	24.00	4.00	–	56.7/12886	71.4	3.10

Combine chains
Ketten für den Mähdrescher

208AF2

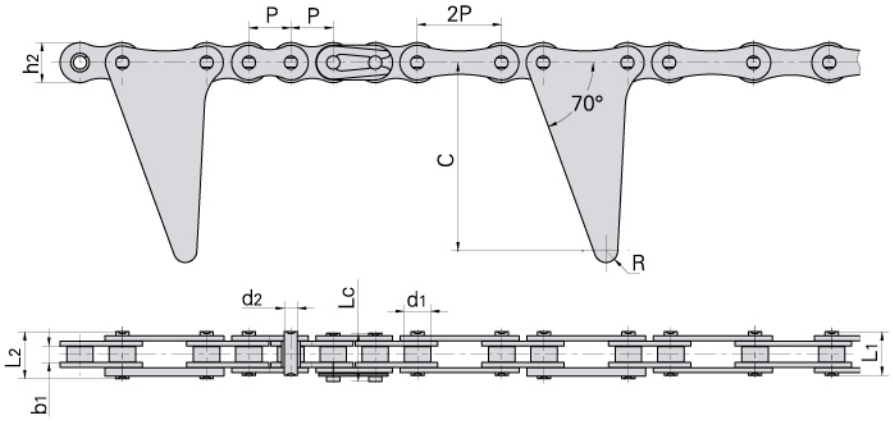

208AF3

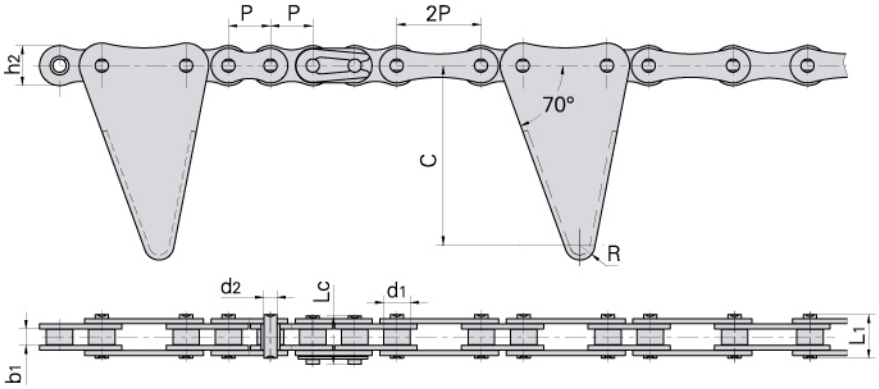

Donghua Chain No. *Donghua Ketten Nr.*	Pitch *Teilung*	Roller diameter *Rollen-durch-messer*	Width between inner plates *Innere Breite*	Pin diameter *Bolzen-durch-messer*	Pin length *Bolzen-länge*			Inner plate depth *Innen-laschen-höhe*	Attachment dimension *Befestigungs-laschen-abmessungen*		Ultimate tensile strength *Min. Bruchkraft*	Average tensile strength *Durchschn. Bruchkraft*
	P	d_1 max	b_1 min	d_2 max	L_1 max	L_2 max	Lc max	h_2 max	C	R	Q min	Q_0
	mm	mm	mm	mm	mm	mm	mm	mm	mm	mm	kN/LB	kN
208AF2	12.7	7.95	4.80	3.96	13.1	14.7	14.5	12.0	56.5	3.5	13.8/3136	16.0
208AF3	12.7	7.95	4.80	3.96	13.1	–	14.5	12.0	60.5	4.5	13.8/3136	16.0
208AF3A	12.7	7.95	7.85	3.96	16.6	–	17.8	12.0	60.5	4.5	13.8/3136	16.0

Combine chains
Ketten für den Mähdrescher

C210AF1

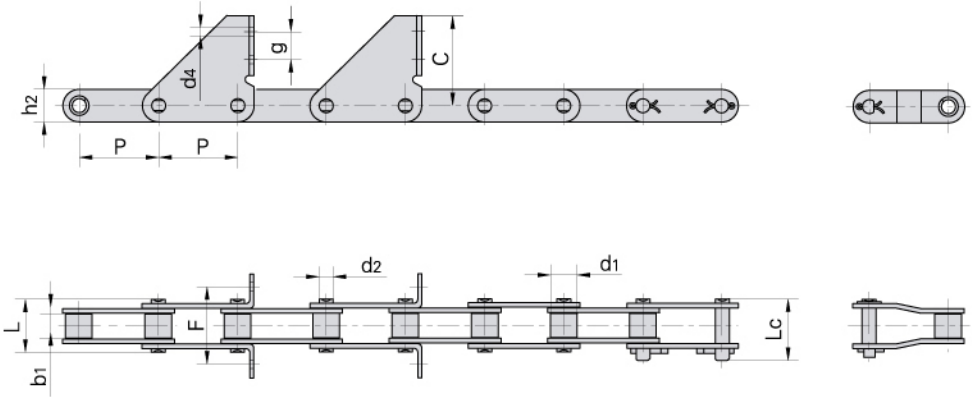

C212AF1

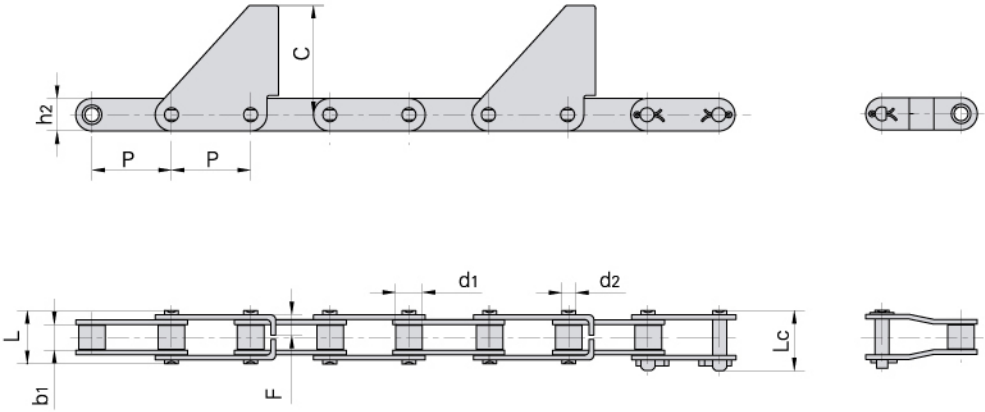

Donghua Chain No. *Donghua Ketten Nr.*	Pitch *Teilung*	Roller diameter *Rollen-durch-messer*	Width between inner plates *Innere Breite*	Pin diameter *Bolzen-durch-messer*	Pin length *Bolzen-länge*		Inner plate depth *Innen-laschen-höhe*	Attachment dimension *Befestigungs-laschen-abmessungen*				Ultimate tensile strength *Min. Bruchkraft*	Average tensile strength *Durchschn. Bruchkraft*
	P	d_1 max	b_1 min	d_2 max	L max	Lc max	h_2 max	F	C	d_4	g	Q min	Q_0
	mm	mm	mm	mm	mm	mm	mm	mm	mm	mm	mm	kN/LB	kN
C210AF1	31.75	10.16	9.40	5.08	20.7	23.3	15.0	35.20	54.0	7.0	23.0	21.8/4955	28.5
C212AF1	38.10	11.91	12.57	5.94	25.9	28.3	18.0	10.92	56.0	–	–	31.1/7068	38.7

ZGS38 combine chain with attachments
ZGS38 Ketten für den Mähdrescher und Anbauteile

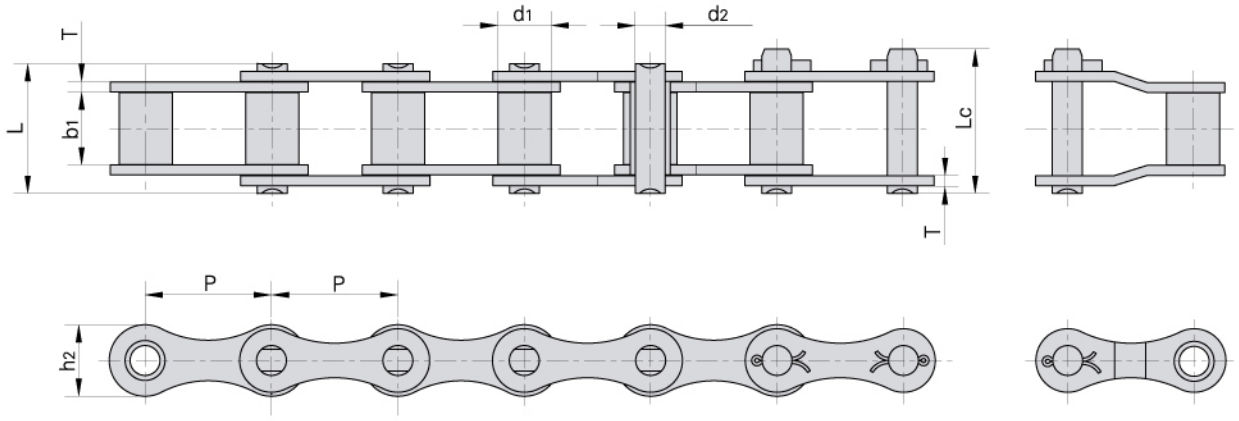

Donghua Chain No. *Donghua Ketten Nr.*	Pitch *Teilung*	Roller diameter *Rollen-durch-messer*	Width between inner plates *Innere Breite*	Pin diameter *Bolzen-durch-messer*	Pin length *Bolzen-länge*		Inner plate depth *Innen-laschen-höhe*	Plate thickness *Laschen-dicke*	Ultimate tensile strength *Min. Bruchkraft*	Average tensile strength *Durchschn. Bruchkraft*	Weight per meter *Gewicht*
	P	d_1 max	b_1 min	d_2 max	L max	Lc max	h_2 max	T max	Q min	Q_0	q
	mm	mm	mm	mm	mm	mm	mm	mm	kN/LB	kN	kg/m
ZGS38	38.0	16.0	22.00	9.0	39.0	43.0	21.5	3.0	40.0/9091	55.3	2.00

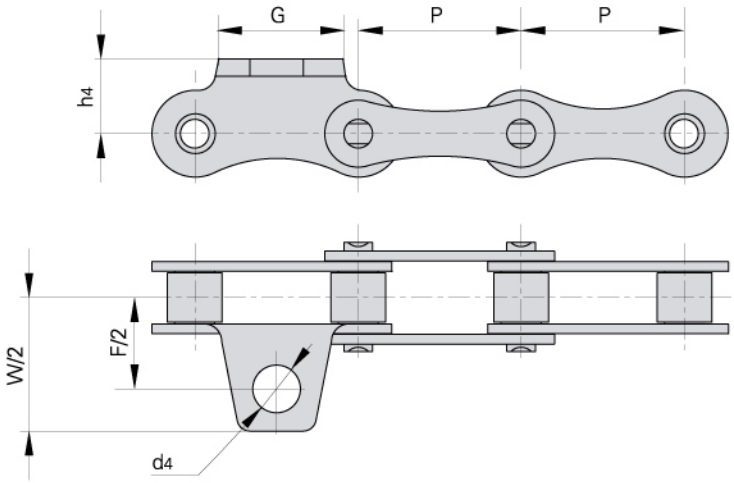

Donghua Chain No. *Donghua Ketten Nr.*	P	G	F	W	h_4	d_4
	mm	mm	mm	mm	mm	mm
ZGS38F2	38.0	17.2	59.0	78.1	19.6	11

ZGS38 combine chain with attachments
ZGS38 Ketten für den Mähdrescher und Anbauteile

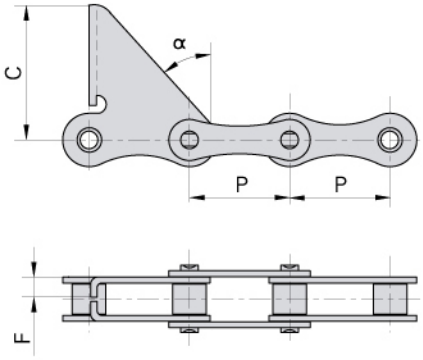

Donghua Chain No. *Donghua Ketten Nr.*	P	C	F	α
	mm	mm	mm	
ZGS38F1	38.0	60.0	14.0	32.5°

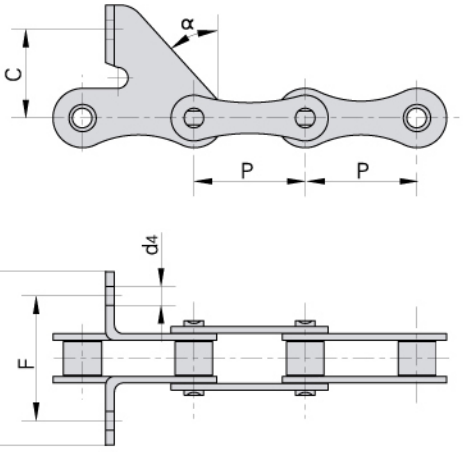

Donghua Chain No. *Donghua Ketten Nr.*	P	C	F	W	α	d4
	mm	mm	mm	mm		mm
ZGS38F3	38.0	30.0	52.0	68.4	43.5°	6.5

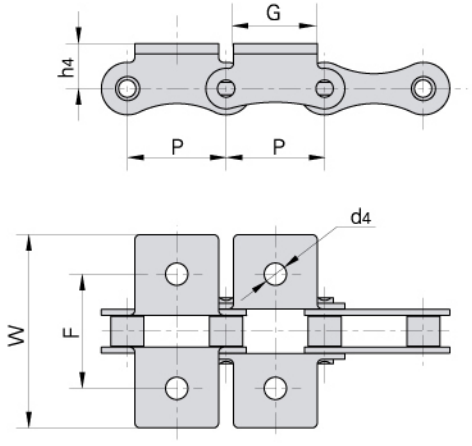

Donghua Chain No. *Donghua Ketten Nr.*	P	G	F	W	h4	d4
	mm	mm	mm	mm	mm	mm
ZGS38K1	38.0	32.0	53.0	83.2	20.0	8.5

RICE HARVESTER CHAINS
KETTEN FÜR DIE REISERNTEMASCHINE





Rice harvester chains
Ketten für die Reiserntemaschine

Hoisting chains
Elevatorketten

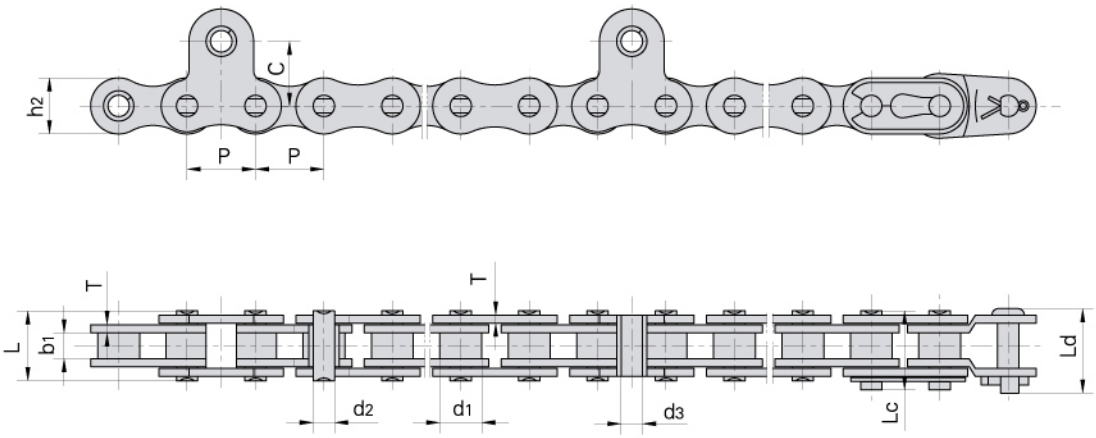

Donghua Chain No.	Pitch	Roller diameter	Width between inner plates	Pin diameter	Pin length			Inner plate depth	Plate thickness	Attachment dimension		Ultimate tensile strength	Average tensile strength
	Teilung	*Rollen-durch-messer*	*Innere Breite*	*Bolzen-durch-messer*	*Bolzen-länge*			*Innen-laschen-höhe*	*Laschen-dicke*	*Befestigungs-laschen-abmessungen*		*Min. Bruchkraft*	*Durchschn. Bruchkraft*
Donghua Ketten Nr.	P	d_1 max	b_1 min	d_2 max	L max	Lc max	Ld max	h_2 max	T max	d_3 nom	C	Q min	Q_0
	mm	mm	mm	mm	mm	mm	mm	mm	mm	mm	mm	kN/LB	kN
415F1	12.7	7.77	4.90	3.64	11.0	12.1	12.95	9.5	1.1	4.02	12.0	6.86/1559	8.1
415F2	12.7	7.77	4.90	3.64	11.0	12.1	12.95	9.5	1.1	4.02	12.0	6.86/1559	8.1
415F3	12.7	7.77	4.90	3.64	11.0	12.1	12.95	9.5	1.1	4.02	12.0	6.86/1559	8.1
415F4	12.7	7.77	4.68	3.62	11.8	–	–	9.6	1.3	4.00	12.0	10.30/2341	12.1
415F5	12.7	7.77	4.68	3.63	11.8	13.0	14.00	9.6	1.3	4.00	12.0	10.30/2341	12.1
415S	12.7	7.77	4.80	3.96	12.8	14.3	15.70	12.0	1.5	4.02	12.0	15.69/3566	16.3
415S–A	12.7	7.77	4.90	3.96	12.8	14.3	15.70	12.0	1.5	4.02	12.0	13.80/3136	16.3
415SF1	12.7	7.77	4.80	3.96	13.0	14.5	–	10.4	1.5	4.50	12.0	13.93/3166	16.3
415SF2	12.7	7.77	4.80	3.96	13.0	14.5	–	10.4	1.5	4.50	12.0	13.93/3166	16.3
415SF3	12.7	7.77	4.80	3.96	12.8	14.3	15.70	12.0	1.5	4.02	12.0	15.69/3566	16.3
415SF4	12.7	7.77	4.80	3.96	13.0	14.5	15.70	12.0	1.5	4.00	12.0	13.80/3136	16.3
420JF1	12.7	7.77	6.25	3.96	14.7	16.1	18.50	12.0	1.5	4.00	12.0	16.00/3636	18.8
415SF6	12.7	7.77	4.80	3.96	13.0	14.5	15.70	10.4	1.5	4.00	12.0	13.93/3166	16.3

Rice harvester chains
Ketten für die Reiserntemaschine

Plucking conveyor chain 3558T
3558T Einzugsketten

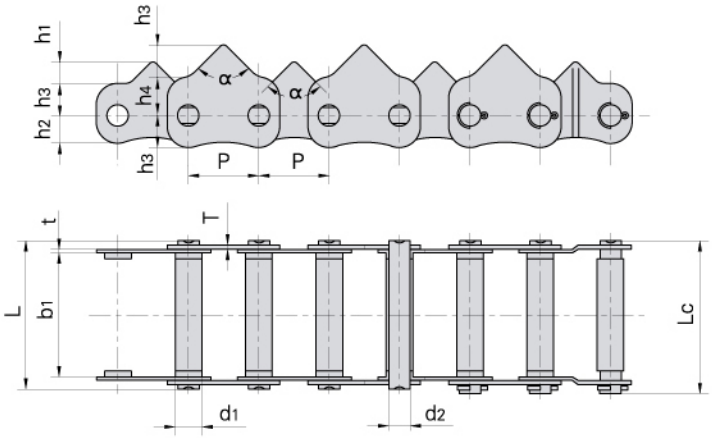

Donghua Chain No. *Donghua Ketten Nr.*	Pitch *Teilung*	Roller diameter *Rollen-durch-messer*	Width between inner plates *Innere Breite*	Pin diameter *Bolzen-durch-messer*	Pin length *Bolzen-länge*		Tooth angle *Zahn-winkel*	Plate dimension *Laschen-abmessungen*				Plate thickness *Laschen-dicke*	Ultimate tensile strength *Min. Bruchkraft*	Average tensile strength *Durchschn. Bruchkraft*
	P	d_1 max	b_1 min	d_2 max	L max	Lc max	α	h_1	h_2	h_3	h_4	t/T max	Q min	Q_0
	mm	mm	mm	mm	mm	mm		mm	mm	mm	mm	mm	kN/LB	kN
3558T–48001	35	10.1	58	7.0	69.4	72.0	90°	10	13	15	18	1.6/2.03	19.6/4457	23.0
3558T–48001F1	35	12.6	58	10.0	69.4	71.2	90°	10	13	15	18	1.6/2.03	19.6/4457	23.0
3558T–48002	35	12.8	58	7.0	69.4	72.0	90°	10	13	15	18	1.6/2.03	19.6/4457	23.0

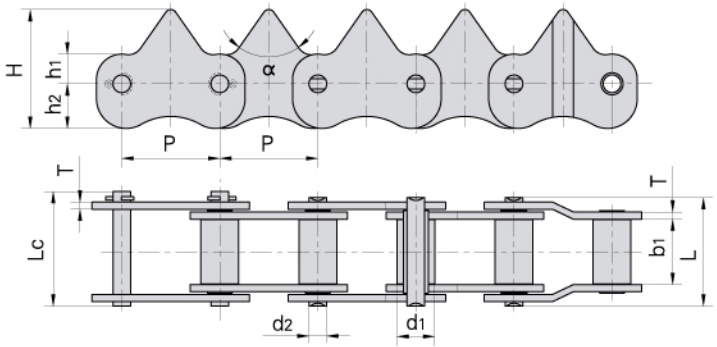

Donghua Chain No. *Donghua Ketten Nr.*	Pitch *Teilung*	Roller diameter *Rollen-durch-messer*	Width between inner plates *Innere Breite*	Pin diameter *Bolzen-durch-messer*	Pin length *Bolzen-länge*		Tooth angle *Zahn-winkel*	Plate dimension *Laschen-abmessungen*			Plate thickness *Laschen-dicke*	Ultimate tensile strength *Min. Bruchkraft*	Average tensile strength *Durchschn. Bruchkraft*
	P	d_1 max	b_1 min	d_2 max	L max	Lc max	α	h_1	h_2	H	T	Q min	Q_0
	mm	mm	mm	mm	mm	mm		mm	mm	mm	mm	kN/LB	kN
3322–63201	33	12.7	22.0	5.94	36.4	38.4	70°	10	15	40	2.42	19.6/4455	22.5
3325–23160	33	12.8	25.0	7.00	35.9	38.7	60°	10	13	43	1.60	21.6/4909	24.5
3330–28361	33	12.8	30.0	7.00	40.9	43.7	60°	10	13	43	1.60	21.6/4909	24.5
3330–27150	33	12.8	30.0	7.00	40.9	43.7	70°	10	13	38	1.60	21.6/4909	24.5

Rice harvester chains
Ketten für die Reiserntemaschine

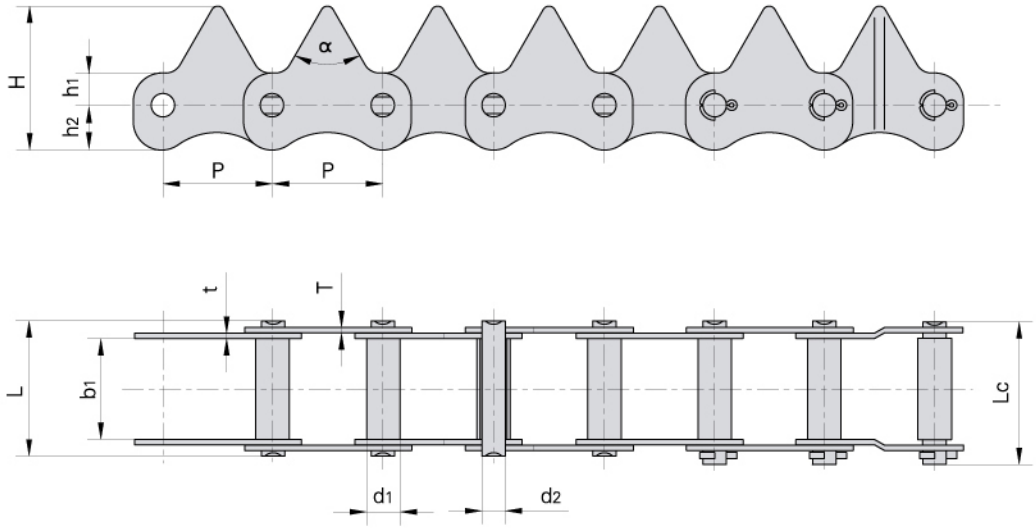

Donghua Chain No. *Donghua Ketten Nr.*	Pitch *Teilung*	Roller diameter *Rollen-durch-messer*	Width between inner plates *Innere Breite*	Pin diameter *Bolzen-durch-messer*	Pin length *Bolzen-länge*		Tooth angle *Zahn-winkel*	Plate dimension *Laschen-abmessungen*			Plate thickness *Laschen-dicke*	Ultimate tensile strength *Min. Bruchkraft*	Average tensile strength *Durchschn. Bruchkraft*
	P	d_1 max	b_1 min	d_2 max	L max	Lc max	α	h_1	h_2	H	t/T max	Q min	Q_0
	mm	mm	mm	mm	mm	mm		mm	mm	mm	mm	kN/LB	kN
3318.5–A0680106	33	10.1	18.5	7.0	29.0	31.0	70°	10	13	38	1.60	19.60/4455	22.5
3325–4LB1.35	33	10.1	25.0	7.0	37.0	39.5	90°	10	13	38	2.03	19.60/4455	24.0
3325–4LB1.45	33	10.1	25.0	7.0	35.6	37.6	70°	10	13	38	1.70	19.60/4455	22.5
3325–3572	33	10.1	25.0	7.0	36.8	39.0	70°	10	13	38	2.0/1.6	19.60/4455	23.0
3325–1E6410	33	10.1	25.0	7.0	36.8	39.0	90°	10	13	38	2.0/1.6	19.60/4455	23.0
3325–3555	33	10.1	25.0	7.0	36.8	39.0	70°	10	13	38	2.0/1.6	19.60/4455	22.5
3330–4LB1.45	33	10.1	30.0	7.0	40.3	42.7	60°	10	13	43	1.70	19.60/4455	22.5
3330–4LB1.45–01	33	10.1	30.0	7.0	40.3	42.7	70°	10	13	38	1.70	19.60/4455	22.5
3340–3572	33	10.1	40.0	7.0	51.8	54.0	70°	10	13	38	2.0/1.6	19.60/4455	23.0
3340–1E8570	33	10.1	40.0	7.0	49.2	52.5	90°	18	10	38	1.6/1.2	19.60/4455	22.0
3350–3555	33	10.1	50.0	7.0	60.2	62.5	70°	18	10	43	1.60	19.60/4455	22.5
3325–49200	33	12.8	25.0	7.0	35.9	38.7	70°	10	13	38	1.60	21.60/4909	24.5
3358–1E8350	33	10.1	58.0	7.0	68.0	72.0	90°	18	10	38	1.60	19.60/4455	22.5
3358–1E7070	33	10.1	58.0	7.0	68.0	–	90°	18	10	38	1.60	19.60/4455	22.5
3358–6365	33	10.1	58.0	7.0	68.2	70.5	70°	18	10	43	1.60	19.60/4455	22.5
3540–0875	35	10.1	40.0	7.0	50.2	52.5	70°	18	10	43	1.60	19.60/4455	22.5
3540–3572	35	10.1	40.0	7.0	50.2	52.5	70°	10	10	35	1.60	19.60/4455	22.5
3558–4LB1.35	35	13.2	58.0	9.4	70.0	73.2	90°	15	18	47	2.03	22.54/5123	27.1
3550–5080	35	10.1	50.0	7.0	60.2	62.5	70°	18	10	38	1.60	19.60/4455	22.5

Rice harvester chains
Ketten für die Reiserntemaschine

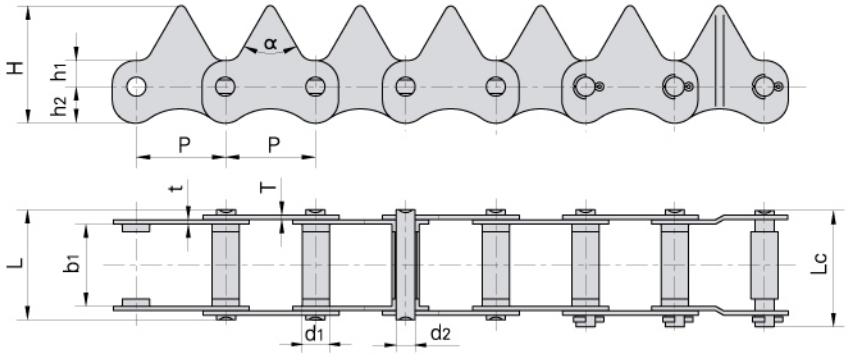

Donghua Chain No. *Donghua Ketten Nr.*	Pitch *Teilung*	Roller diameter *Rollen-durch-messer*	Width between inner plates *Innere Breite*	Pin diameter *Bolzen-durch-messer*	Pin length *Bolzen-länge*		Tooth angle *Zahn-winkel*	Plate dimension *Laschen-abmessungen*			Plate thickness *Laschen-dicke*	Ultimate tensile strength *Min. Bruchkraft*	Average tensile strength *Durchschn. Bruchkraft*
	P	d_1 max	b_1 min	d_2 max	L max	Lc max	α	h_1	h_2	H	t/T max	Q min	Q_0
	mm	mm	mm	mm	mm	mm		mm	mm	mm	mm	kN/LB	kN
3318T–5010	33	10.1	18.0	7.0	28.5	31.4	70°	10	13	38	1.6	19.6/4455	22.5
3322T–52800	33	10.1	22.0	7.0	31.5	34.5	70°	10	13	38	1.6	17.64/4010	20.2
3322T–28241	33	12.1	21.3	7.0	31.8	34.1	60°	10	13	43	1.6	19.60/4455	22.5
3325T–23151	33	10.1	25.0	7.0	35.5	37.7	60°	10	13	43	1.6	19.60/4455	22.5
3325T–49201	33	10.1	25.0	7.0	35.5	37.7	90°	10	13	38	1.6	19.60/4455	22.5
3325T–A0680110	33	10.1	25.0	7.0	35.5	37.7	70°	10	13	38	1.6	19.60/4455	22.5
3325T–A0680110F1	33	12.6	25.0	7.0	35.5	37.7	70°	10	13	38	1.6	19.60/4455	22.5
3325T–3650	33	10.1	25.0	7.0	35.5	37.7	70°	10	13	38	1.6	19.60/4455	22.5
3330T–27151	33	10.1	30.0	7.0	40.5	42.8	70°	10	13	38	1.6	19.60/4455	22.5
3330T–28241	33	10.1	30.0	7.0	40.5	42.8	60°	10	13	43	1.6	19.60/4455	22.5
3330T–28241F1	33	12.6	30.0	7.0	40.5	42.8	60°	10	13	43	1.6	19.60/4455	22.5
3330T–28241F2	33	12.1	29.3	7.0	39.8	42.1	60°	10	13	43	1.6	19.60/4455	22.5
3330T–3501	33	10.1	30.0	7.0	40.5	42.8	70°	10	13	38	1.6	19.60/4455	22.5
3330T–59750	33	10.1	30.0	7.0	39.5	42.5	60°	10	13	43	1.6	19.60/4455	22.5
3330T–5028	33	10.1	30.0	7.0	40.9	43.7	60°	10	13	43	1.6/2.0	19.60/4455	22.5
3330T–52200	33	10.1	30.0	7.0	40.9	43.7	60°	10	13	43	1.6/2.0	19.60/4455	22.5
3335T–27151	33	10.1	35.0	7.0	45.5	47.8	70°	10	13	38	1.6	19.60/4455	22.5
3358T–3330	33	10.1	58.0	7.0	68.0	72.0	90°	18	10	38	1.6	19.60/4455	22.5
3358T–53871	33	10.1	58.0	7.0	68.0	70.8	75°	18	10	43	1.6	19.60/4455	22.5
3358T–6365	33	10.1	58.0	7.0	68.2	72.0	75°	18	10	43	1.6	19.60/4455	22.5
3330T–28242	33	12.8	30.0	7.0	40.5	42.8	60°	10	13	43	1.6	19.6/4455	22.5
3330T–27152	33	12.8	30.0	7.0	40.5	42.8	70°	10	13	38	1.6	19.6/4455	22.5
3350T–744	33	10.1	50.0	7.0	60.2	63.0	90°	18	10	38	1.6	19.6/4455	22.5
3325T–699	33	10.1	25.0	7.0	36.2	39.3	90°	10	13	38	2.0/1.6	19.6/4455	22.5
3325T–3817	33	10.1	25.0	7.0	36.2	39.0	90°	10	13	38	2.0/1.6	19.61/4455	22.5
3330T–3817	33	12.1	30.0	7.0	40.5	42.8	60°	10	13	43	1.6	19.61/4455	22.5
3330T–53981	33	12.8	30.0	7.0	40.5	42.8	70°	10	13	38	1.6	19.6/4455	22.5
3330T–5441	33	10.1	30.0	7.0	40.9	43.7	60°	10	13	43	1.6/2.0	19.61/4455	22.5
3358T–6365F1	33	12.8	58.0	7.0	68.2	72.0	75°	18	10	43	1.6	19.6/4455	22.5
3325T–5060	33	10.1	25.0	7.0	36.8	39.0	70°	10	13	38	1.6/2.0	19.61/4455	22.5
3350T–6379	33	10.1	50.0	7.0	60.2	62.5	75°	18	10	43	1.6	19.6/4455	22.5

Rice harvester chains
Ketten für die Reiserntemaschine

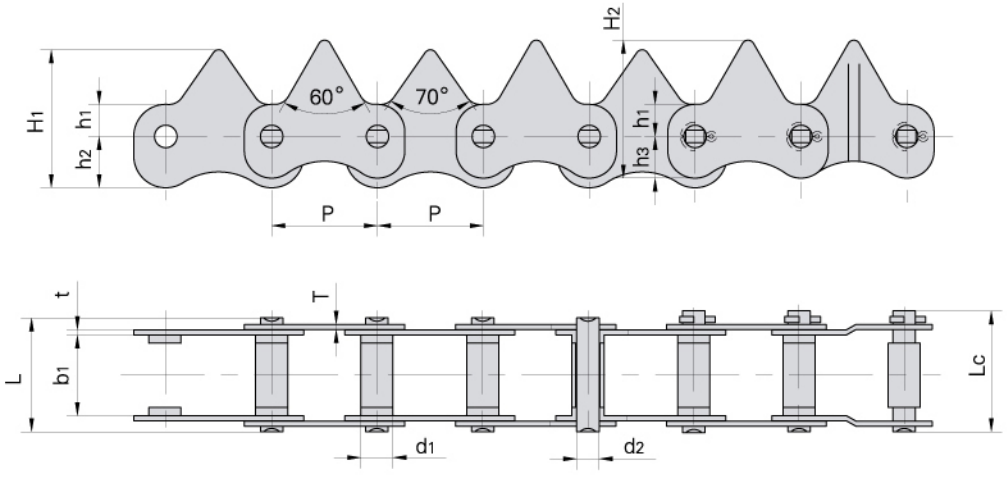

Donghua Chain No. / *Donghua Ketten Nr.*	Pitch / *Teilung*	Roller diameter / *Rollen-durch-messer*	Width between inner plates / *Innere Breite*	Pin diameter / *Bolzen-durch-messer*	Pin length / *Bolzen-länge*		Plate dimension / *Laschen-abmessungen*					Plate thickness / *Laschen-dicke*	Ultimate tensile strength / *Min. Bruchkraft*	Average tensile strength / *Durchschn. Bruchkraft*
	P	d1 max	b1 min	d2 max	L max	Lc max	h1	h2	H1	h3	H2	t/T max	Q min	Q0
	mm	mm	mm	mm	mm	mm	mm	mm	mm	mm	mm	mm	kN/LB	kN
3322T–63203	33	10.1	22	7.0	33.0	35.7	10	16	36	13	43	1.6/2.0	19.6/4455	23.0
3330T–66103	33	10.1	30	7.0	40.9	43.7	10	16	36	13	43	1.6/2.0	19.6/4455	23.0

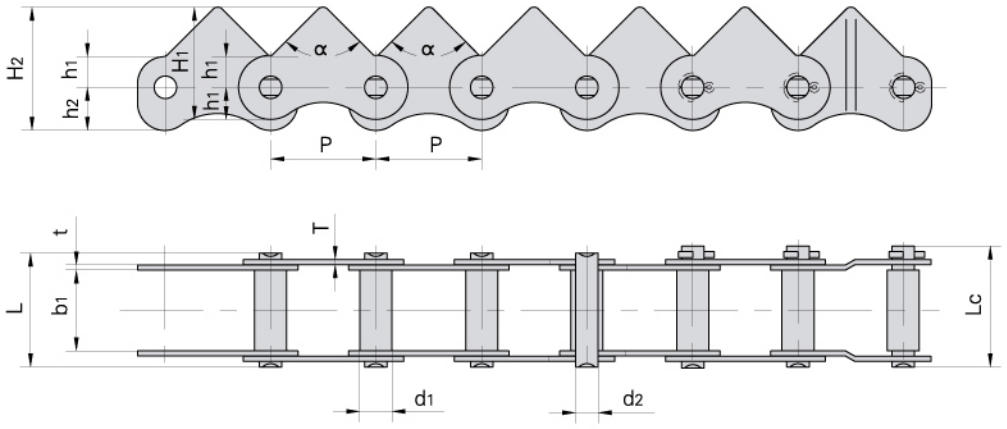

Donghua Chain No. / *Donghua Ketten Nr.*	Pitch / *Teilung*	Roller diameter / *Rollen-durch-messer*	Width between inner plates / *Innere Breite*	Pin diameter / *Bolzen-durch-messer*	Pin length / *Bolzen-länge*		Tooth angle / *Zahn-winkel*	Plate dimension / *Laschen-abmessungen*				Plate thickness / *Laschen-dicke*	Ultimate tensile strength / *Min. Bruchkraft*	Average tensile strength / *Durchschn. Bruchkraft*
	P	d1 max	b1 min	d2 max	L max	Lc max	α	h1	H1	h2	H2	t/T max	Q min	Q0
	mm	mm	mm	mm	mm	mm		mm	mm	mm	mm	mm	kN/LB	kN
3325–1E8350	33	10.1	25	7.0	34.2	37.8	90°	10	35	13	38	1.6/1.2	19.6/4455	22.0
3325–1E6110	33	10.1	25	7.0	34.2	37.0	70°	10	35	13	38	1.6/1.2	19.6/4455	22.0

Rice harvester chains
Ketten für die Reiserntemaschine

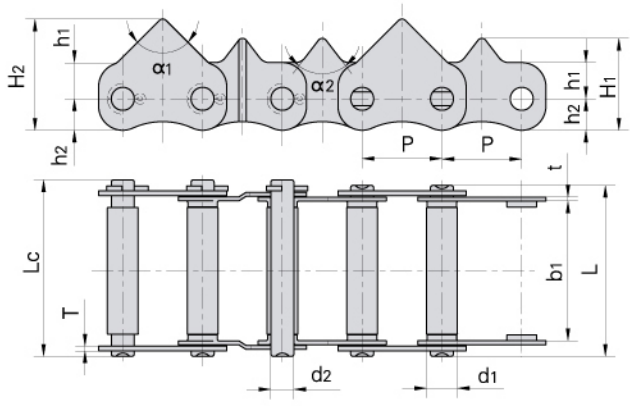

Donghua Chain No. *Donghua Ketten Nr.*	Pitch *Teilung*	Roller diameter *Rollen-durch-messer*	Width between inner plates *Innere Breite*	Pin diameter *Bolzen-durch-messer*	Pin length *Bolzen-länge*		Tooth angle *Zahn-winkel*	Plate dimension *Laschen-abmessungen*				Plate thickness *Laschen-dicke*	Ultimate tensile strength *Min. Bruchkraft*	Average tensile strength *Durchschn. Bruchkraft*
	P	d_1 max	b_1 min	d_2 max	L max	Lc max	α_1 / α_2	h_1	h_2	H_1	H_2	t/T max	Q min	Q_0
	mm	mm	mm	mm	mm	mm		mm	mm	mm	mm	mm	kN/LB	kN
3358T–5K151	33	12.8	58	9.5	69.7	72.7	90° /75°	15	13	38	46	1.6/2.03	19.62/4460	22.5
3358T–3653	33	12.8	58	9.5	69.7	72.7	90° /90°	16	12	38	48	1.6/2.03	19.6/4455	22.5
3358T–762	33	12.8	58	9.5	69.7	72.9	90° /75°	15	13	38	46	1.6/2.03	19.6/4455	22.5

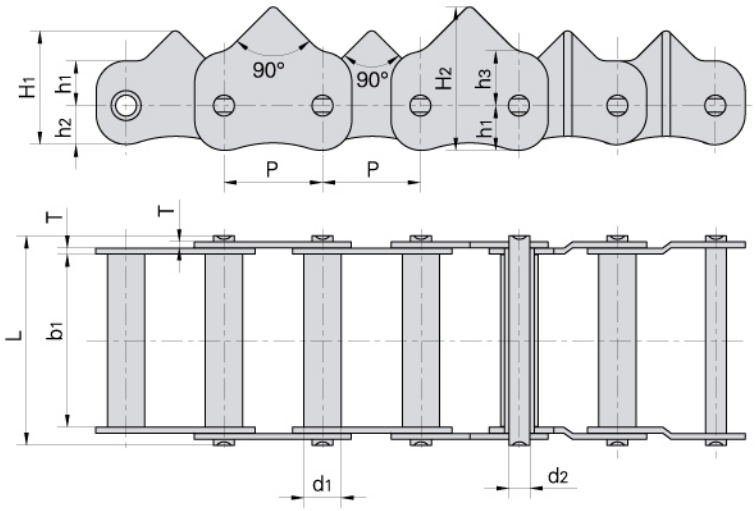

Donghua Chain No. *Donghua Ketten Nr.*	Pitch *Teilung*	Roller diameter *Rollen-durch-messer*	Width between inner plates *Innere Breite*	Pin diameter *Bolzen-durch-messer*	Pin length *Bolzen-länge*	Plate dimension *Laschen-abmessungen*					Plate thickness *Laschen-dicke*	Ultimate tensile strength *Min. Bruchkraft*	Average tensile strength *Durchschn. Bruchkraft*
	P	d_1 max	b_1 min	d_2 max	L max	h_1	h_2	h_3	H_1	H_2	T	Q min	Q_0
	mm	mm	mm	mm	mm	mm	mm	mm	mm	mm	mm	kN/LB	kN
3558–48180	35	12.8	58	7	70.5	15	13	18	38	48	2.03	27.44/6236	28.5

Rice harvester chains
Ketten für die Reiserntemaschine

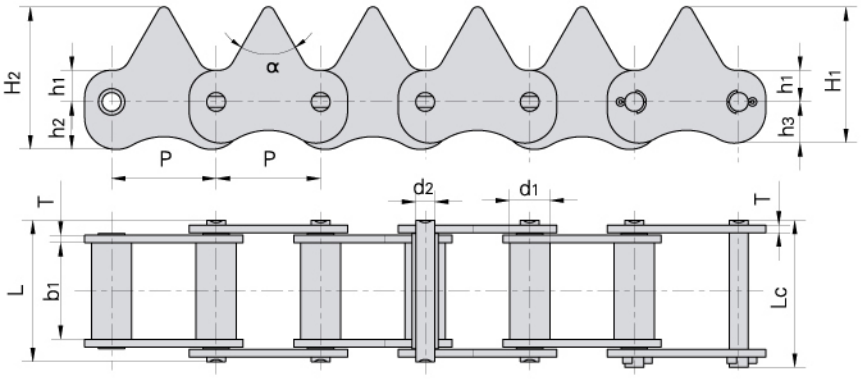

Donghua Chain No. *Donghua Ketten Nr.*	Pitch *Teilung*	Roller diameter *Rollen-durch-messer*	Width between inner plates *Innere Breite*	Pin diameter *Bolzen-durch-messer*	Pin length *Bolzen-länge*		Tooth angle *Zahn-winkel*	Plate dimension *Laschen-abmessungen*					Plate thickness *Laschen-dicke*	Ultimate tensile strength *Min. Bruchkraft*	Average tensile strength *Durchschn. Bruchkraft*
	P	d1 max	b1 min	d2 max	L max	Lc max	α	h1	h2	h3	H1	H2	T	Q min	Q0
	mm	mm	mm	mm	mm	mm		mm	mm	mm	mm	mm	mm	kN/LB	kN
3330–66401	33	12.7	30	5.94	44.4	47.6	60°	10	15	13	43	45	2.42	19.61/4457	22.5

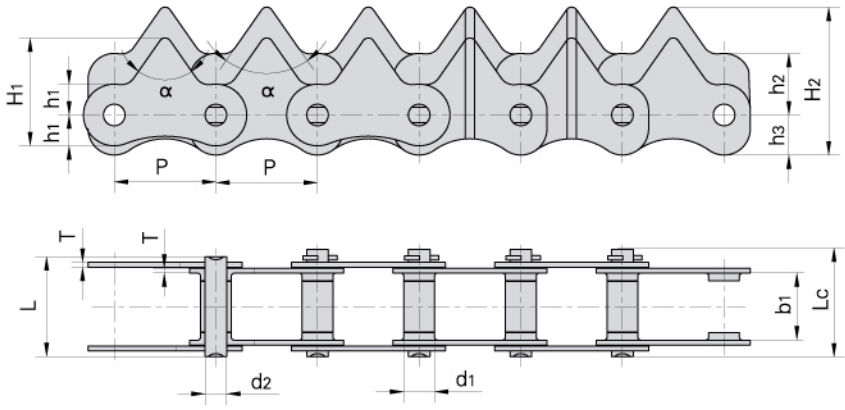

Donghua Chain No. *Donghua Ketten Nr.*	Pitch *Teilung*	Roller diameter *Rollen-durch-messer*	Width between inner plates *Innere Breite*	Pin diameter *Bolzen-durch-messer*	Pin length *Bolzen-länge*		Tooth angle *Zahn-winkel*	Plate dimension *Laschen-abmessungen*					Plate thickness *Laschen-dicke*	Ultimate tensile strength *Min. Bruchkraft*	Average tensile strength *Durchschn. Bruchkraft*
	P	d1 max	b1 min	d2 max	L max	Lc max	α	h1	h2	h3	H1	H2	T	Q min	Q0
	mm	mm	mm	mm	mm	mm		mm	mm	mm	mm	mm	mm	kN/LB	kN
3325T–1E8350	33	10.1	28	7.0	34.5	39	70°	10	20	13	35	48	1.6	19.60/4455	22.5

VARIOUS AGRICULTURAL CHAIN WITH ATTACHMENTS

VERSCHIEDENE LANDMASCHINENKETTEN UND ANBAUTEILE

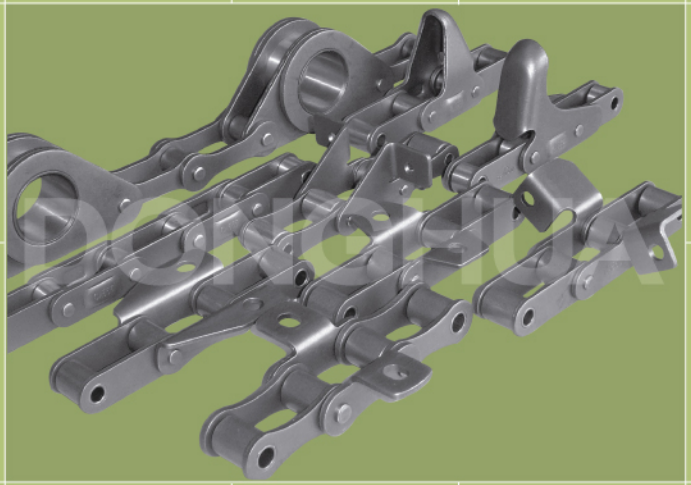

S type steel agricultural chains
Landmaschinenketten S-Typ

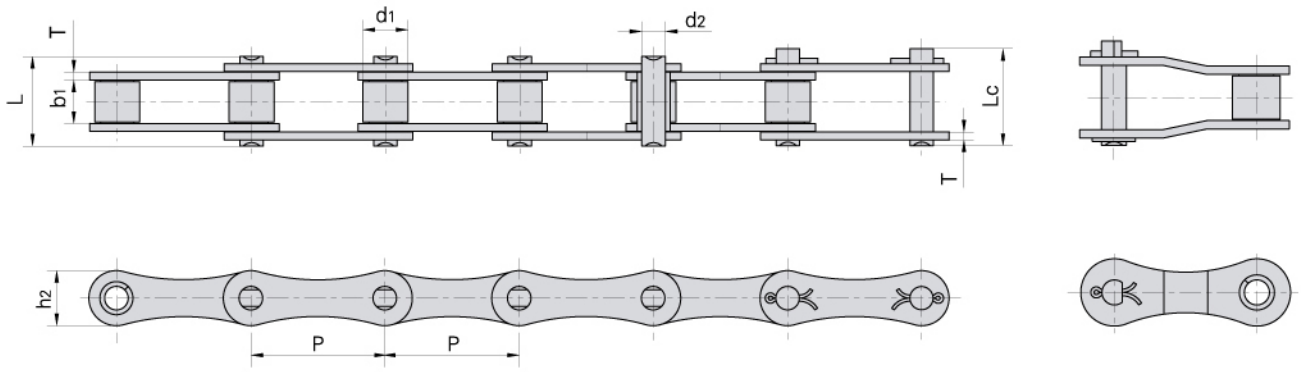

Donghua Chain No. *Donghua Ketten Nr.*	Pitch *Teilung*	Roller diameter *Rollen-durch-messer*	Width between inner plates *Innere Breite*	Pin diameter *Bolzen-durch-messer*	Pin length *Bolzen-länge*		Inner plate depth *Laschen-höhe*	Plate thickness *Laschen-dicke*	Ultimate tensile strength *Min. Bruchkraft*	Average tensile strength *Durchschn. Bruchkraft*	Weight per meter *Gewicht*
	P	d_1 max	b_1 min	d_2 max	L max	Lc max	h_2 max	t/T max	Q min	Q_0	q
	mm	mm	mm	mm	mm	mm	mm	mm	kN/LB	kN	kg/m
S32	29.21	11.43	15.88	4.45	26.7	28.8	13.2	1.8	8.0/1818	21.6	0.86
S32V	29.21	11.43	15.88	5.08	27.3	29.7	13.5	2.1	25.0/5680	27.0	0.96
S42	34.93	14.27	19.05	7.00	34.3	37.0	19.8	2.8	27.0/6136	50.8	1.60
S45	41.40	15.24	22.23	5.72	37.7	40.4	17.3	2.8	18.0/4091	36.1	1.66
S51	38.10	15.24	16.00	5.72	30.9	33.8	17.3	2.8	28.0/6364	30.8	1.48
S52L	38.10	15.24	16.40	5.72	30.9	33.8	16.5	2.5	29.2/6636	32.2	1.36
S52LV	38.10	15.88	17.80	6.94	33.8	37.0	16.7	3.0	30.0/6818	32.5	1.58
S52	38.10	15.24	22.23	5.72	37.7	40.4	17.3	2.8	18.0/4091	36.1	1.68
55V	41.40	17.90	22.23	8.22	39.3	42.4	20.0	3.0	42.0/9546	45.0	2.22
55VF1	41.40	17.90	22.23	8.22	39.3	42.4	21.4	3.0	45.0/10227	73.1	2.32
S55	41.40	17.78	22.23	5.72	37.7	40.4	17.3	2.8	18.0/4091	36.1	1.80
S55R	41.40	17.78	22.23	8.90	41.0	44.0	22.4	3.5	45.0/10227	73.1	2.49
S55RH	41.40	17.78	22.23	8.90	43.2	46.4	22.4	4.0	65.0/14772	84.5	2.74
S55RHF1	41.40	25.00	22.23	8.90	43.2	46.4	22.4	4.0	65.0/14772	84.5	2.74
S62	41.91	19.05	26.20	5.72	40.3	43.0	17.3	2.5	26.7/6067	36.1	1.87
S62F5	41.91	19.05	26.20	5.72	40.3	43.0	16.7	2.5	26.7/6067	36.1	2.07
S77	58.34	18.26	22.23	8.90	43.2	46.4	26.2	4.0	45.0/10227	73.1	2.66
S88	66.27	22.86	28.58	8.90	49.8	53.0	26.2	4.0	45.0/10227	73.1	3.25
CA642	41.40	15.88	19.00	8.28	36.1	39.1	21.2	3.0	50.0/11363	55.0	1.98
CA650	50.80	25.00	18.90	9.53	40.4	44.7	25.0	4.0	90.0/20454	95.5	3.49
CA650F2	50.80	20.00	18.90	9.53	40.4	44.7	25.0	4.0	90.0/20454	95.5	2.98
S42F2	34.93	14.27	19.05	7.00	34.3	37.0	19.8	2.5/3.0	27.0/6136	50.8	1.82
S52F10	38.10	14.00	22.00	6.92	36.5	39.1	18.2	2.5	23.5/5283	28.2	1.60
S62F10	41.91	19.05	25.40	5.72	39.4	42.2	17.3	2.5	26.7/6067	36.1	2.04
S62F8	41.91	19.05	27.90	10.00	44.9	49.3	25.0	3.0	45.0/10227	60.0	2.96
CA650F4	50.80	19.05	19.05	5.93	40.4	44.7	25.0	4.0	90/20454	95.5	2.85
CA620F4	42.01	19.05	27.90	10.19	44.9	46.5	25.0	3.0	45/10277	60.0	2.95

S type steel agricultural chains
Landmaschinenketten S-Typ

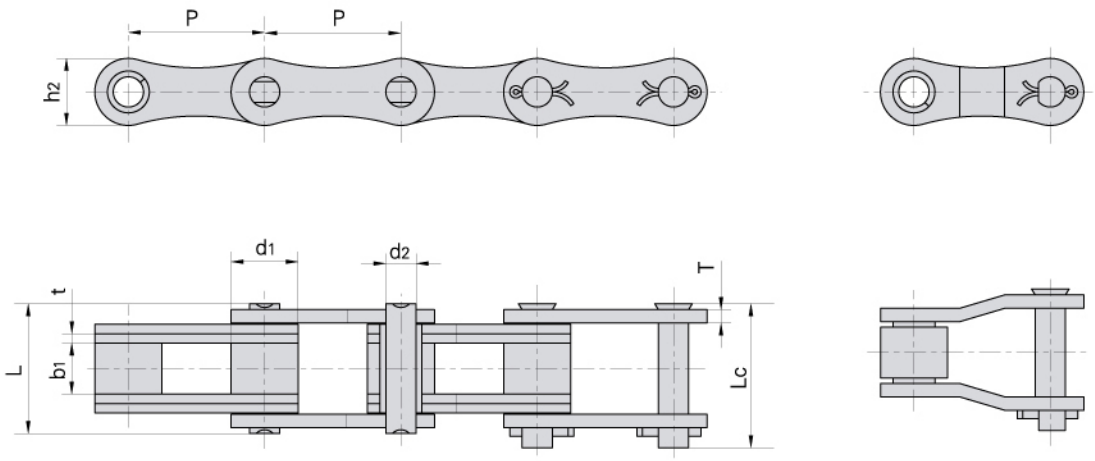

Donghua Chain No. *Donghua Ketten Nr.*	Pitch *Teilung*	Roller diameter *Rollen-durch-messer*	Width between inner plates *Innere Breite*	Pin diameter *Bolzen-durch-messer*	Pin length *Bolzen-länge*		Inner plate depth *Innen-laschen-höhe*	Plate thickness *Laschen-dicke*	Ultimate tensile strength *Min. Bruchkraft*	Average tensile strength *Durchschn. Bruchkraft*	Weight per meter *Gewicht*
	P	d_1 max	b_1 min	d_2 max	L max	Lc max	h_2 max	t/T max	Q min	Q_0	q
	mm	mm	mm	mm	mm	mm	mm	mm	kN/LB	kN/LB	kg/m
55VF1H2	41.4	17.9	22.23	8.22	45.3	48.4	21.4	3.0	60.0/11858	65.0	2.92
CA650F1	50.8	25.0	19.0	11.28	49.2	53.7	25.0	3.5/5.0	138.0/27273	140.0	4.36

S type steel agricultural chain with attachments
Anbauteile für Landmaschinenketten S-Typ

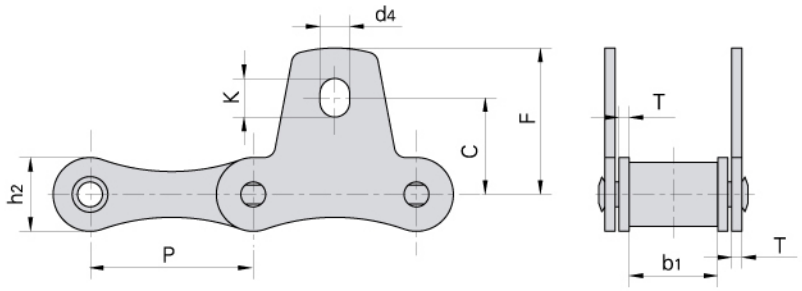

Donghua Chain No. *Donghua Ketten Nr.*	P	b1	h2	T	C	F	d4	K
	mm	mm	mm	mm	mm	mm	mm	mm
S32SK1	29.21	15.88	13.2	1.8	17.3	26.2	5.3	6.9
S42SK1	34.93	19.05	19.8	2.8	23.6	34.3	8.3	11.5
S45SK1	41.40	22.23	17.3	2.8	19.8	30.2	8.3	11.5
S52SK1	38.10	22.23	17.3	2.8	22.1	31.8	8.3	9.9
S55SK1	41.40	22.23	17.3	2.8	19.8	30.2	8.3	11.5
S62SK1	41.91	26.20	17.3	2.5	24.6	38.6	8.3	14.7
S77SK1	58.34	22.23	26.2	4.0	36.3	50.0	8.3	11.5
S88SK1	66.27	28.58	26.2	4.0	43.7	55.6	8.3	9.9

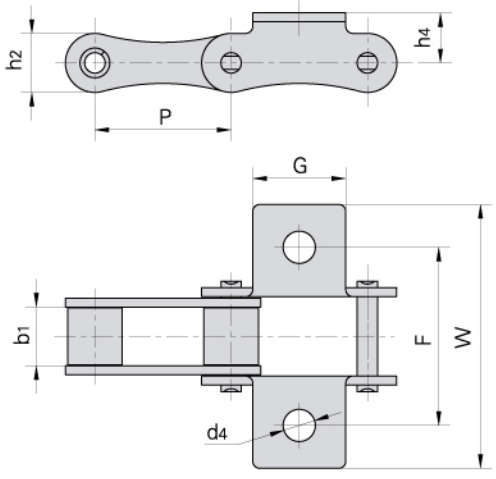

Donghua Chain No. *Donghua Ketten Nr.*	P	b1	G	F	W	h4	d4	h2
	mm	mm	mm	mm	mm	mm	mm	mm
S52LK1	38.10	16.40	26.0	50.0	74.0	14.0	9.0	16.5
55VK1	41.40	22.23	30.0	58.0	76.0	16.0	9.0	20.0
S42F2K1F1	37.93	19.05	45.0	54.8	75.2	14.0	8.3	19.8
S52LF1K1	38.10	16.00	26.0	50.0	74.0	16.0	9.0	16.5

S type steel agricultural chain with attachments
Anbauteile für Landmaschinenketten S-Typ

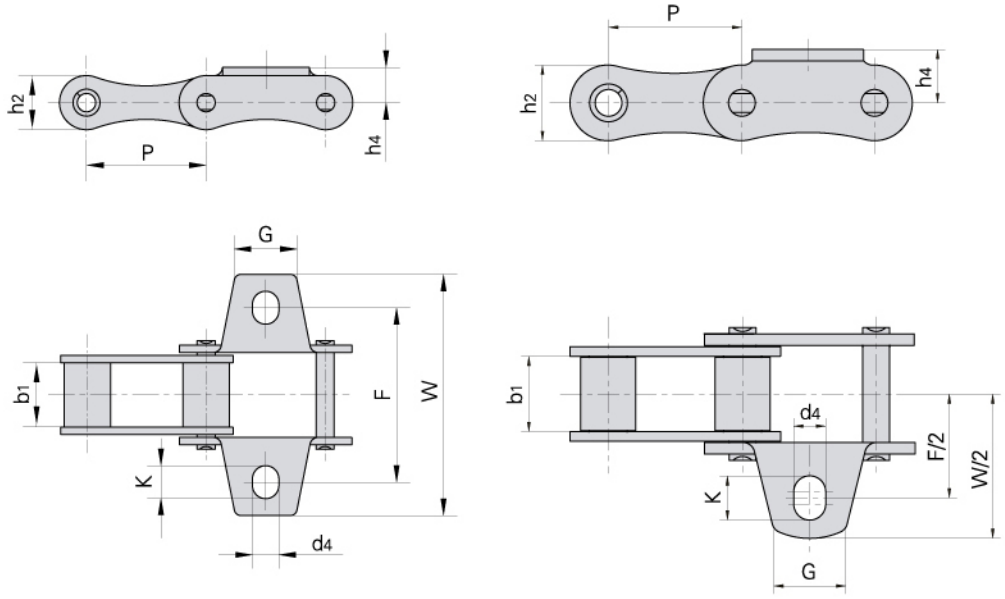

Donghua Chain No. *Donghua Ketten Nr.*	P	b1	G	F	W	h4	d4	K	h2
	mm	mm	mm	mm	mm	mm	mm	mm	mm
S32K1	29.21	15.88	15.0	42.9	61.0	8.6	5.3	6.9	13.2
S32K1F1	29.21	15.88	15.0	42.9	61.0	8.6	6.5	8.1	13.2
S42K1	34.93	19.05	17.5	54.0	74.9	14.0	8.3	11.5	19.8
S45K1	41.40	22.23	22.0	54.0	75.0	11.4	8.5	11.7	17.3
S51K1	38.10	16.00	19.0	49.8	71.5	11.4	8.3	9.9	17.3
S52K1	38.10	22.23	19.0	58.8	78.0	11.4	8.3	9.9	17.3
S52K1F1	38.10	22.23	19.0	58.8	78.0	11.4	6.6	8.2	17.3
S55K1	41.40	22.23	22.0	54.0	75.0	11.4	8.5	11.7	17.3
S55K1F1	41.40	22.23	22.0	54.0	75.0	11.4	6.5	9.5	17.3
S55HK1	41.40	22.23	34.0	52.7	82.0	13.4	8.4	11.4	20.4
S62K1	41.91	26.20	22.0	66.8	95.4	11.4	8.3	14.7	17.3
S62A2K1	41.91	26.20	22.0	66.7	95.5	12.6	8.3	14.7	17.3
S62F2K1	41.91	26.20	22.0	66.8	95.4	11.4	6.5	13.0	17.3
S62F5A2K1	41.91	26.20	22.0	66.7	95.5	12.6	8.3	14.7	16.7
S77K1	58.34	22.23	25.0	76.2	102.0	20.8	8.3	11.5	26.2
S88K1	66.27	28.58	22.0	97.0	119.4	20.8	8.3	9.9	26.2
S51HF1K1	38.10	16.00	34.0	52.4	84.5	13.0	8.3	9.9	21.0
S88F2K1	66.27	28.58	22.0	97.0	119.4	20.8	8.3	9.9	26.2
S42A1F2	34.93	19.05	23.6	54.0	75.0	14.0	6.9	10.1	19.8
S42F2A1	34.93	19.05	17.5	54.0	75.0	14.0	8.3	11.5	19.8
S88F3K1	66.27	28.58	30.0	97.7	120.0	20.5	8.3	9.9	26.2

S type steel agricultural chain with attachments
Anbauteile für Landmaschinenketten S-Typ

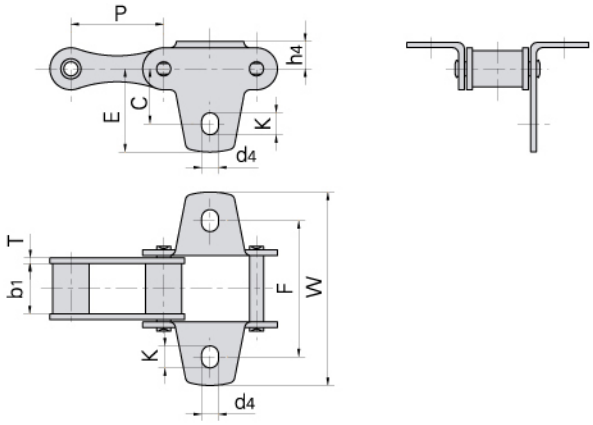

Donghua Chain No. / *Donghua Ketten Nr.*	P	b1	T	C	E	F	W	d4	K	h4
	mm	mm	mm	mm	mm	mm	mm	mm	mm	mm
S32F1	41.4	29.21	1.8	17.3	26.2	42.9	60	5.3	6.9	8.6

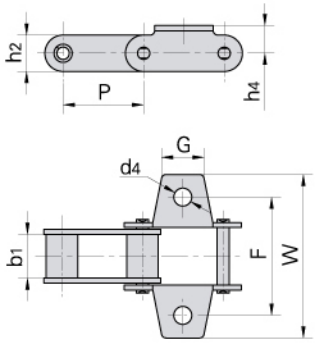

Donghua Chain No. / *Donghua Ketten Nr.*	P	b1	G	F	W	h4	d4	h2
	mm	mm	mm	mm	mm	mm	mm	mm
S52F1	38.4	18.5	23.0	57.5	80.0	16.0	8.7	17.5

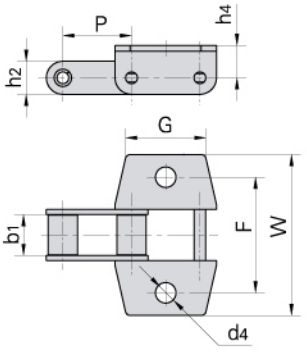

Donghua Chain No. / *Donghua Ketten Nr.*	P	b1	G	F	W	h4	d4	h2
	mm	mm	mm	mm	mm	mm	mm	mm
S52F2	38.4	18.50	39.0	57.0	80.0	16.0	10.5	17.5
S52F7	38.4	19.05	39.0	58.4	82.4	14.5	10.5	20.5
S52F12	38.1	19.05	39.0	57.5	79.5	14.5	10.0	14.5

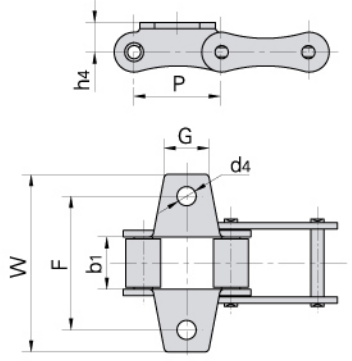

Donghua Chain No. / *Donghua Ketten Nr.*	P	b1	G	F	W	h4	d4
	mm	mm	mm	mm	mm	mm	mm
S52F6	38.1	22.23	19.0	51.2	71.7	16.5	8.3

S type steel agricultural chain with attachments
Anbauteile für Landmaschinenketten S-Typ

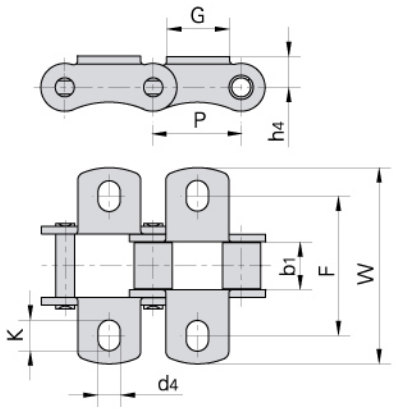

Donghua Chain No. *Donghua Ketten Nr.*	P	b1	G	F	W	h4	d4	K
	mm	mm	mm	mm	mm	mm	mm	mm
S55RK1	41.4	22.23	25.0	63.6	90.4	15.5	8.6	12.0
S55RHK1	41.4	22.23	25.0	63.6	90.4	15.5	8.6	12.0
CA645K1	41.40	22.23	25.0	25.0	83.0	18.5	8.5	12.0

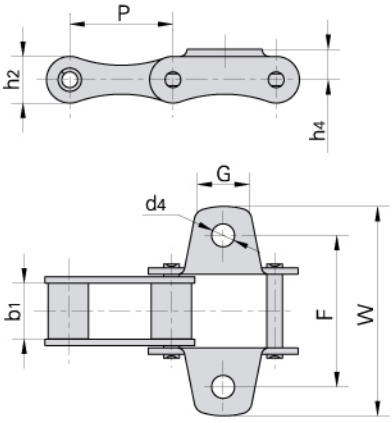

Donghua Chain No. *Donghua Ketten Nr.*	P	b1	G	F	W	h4	d4	h2
	mm	mm	mm	mm	mm	mm	mm	mm
S32K1F2	29.21	15.88	15.0	42.9	61.0	8.6	5.3	13.2
S52K1F2	38.10	22.23	22.0	58.7	76.5	11.4	8.5	17.3
S45K1F1	41.40	22.23	22.0	51.0	75.0	11.4	7.2	17.3
55VK1F1	41.40	22.23	22.0	56.0	75.0	16.0	10.0	20.0
S55F5	41.40	22.23	22.0	56.0	75.0	11.4	10.0	17.3
S77K1F1	58.34	22.23	26.0	76.2	103.8	20.8	10.5	26.2
S55K1F2	41.40	22.23	22.0	55.0	75.0	11.4	8.5	17.3

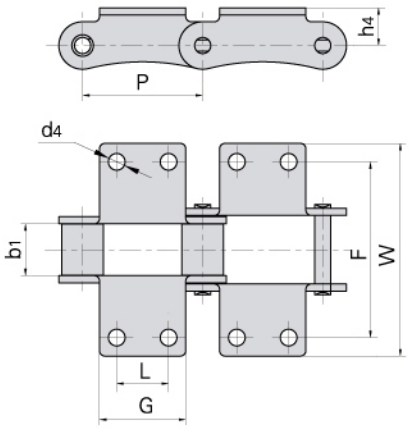

Donghua Chain No. *Donghua Ketten Nr.*	P	b1	L	G	F	W	h4	d4
	mm	mm	mm	mm	mm	mm	mm	mm
S88K2F1	66.27	28.58	28.6	47.6	97.0	117.4	20.8	9.2
S62K2F1	41.91	26.20	19.1	35.0	66.8	95.4	11.4	8.3

S type steel agricultural chain with attachments
Anbauteile für Landmaschinenketten S-Typ

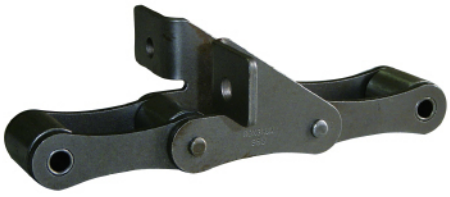

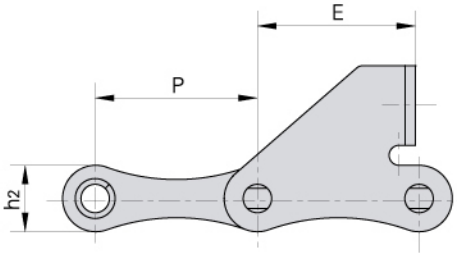

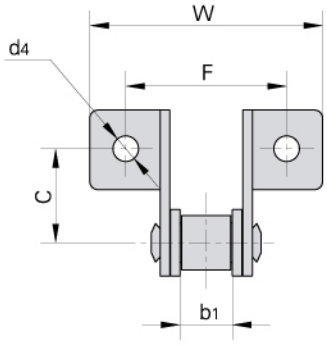

Donghua Chain No. *Donghua Ketten Nr.*	P	b1	C	E	F	W	d4	h2
	mm	mm	mm	mm	mm	mm	mm	mm
S32SD	29.21	15.88	20.0	19.2	58.0	78.0	6.4	13.2
S45W–F1	41.40	22.23	20.0	37.0	58.0	87.0	6.6	17.3
S45W–F4	41.40	22.23	20.5	33.2	58.0	85.6	6.6	17.3
S45F1	41.40	22.23	21.0	25.0	62.4	83.4	8.5	17.3
S45SDF2	41.40	22.23	21.0	28.5	62.4	83.4	8.5	17.3
S52SD	38.10	22.23	20.0	19.2	62.0	88.5	6.4	17.3
S52F4	38.10	15.80	20.6	37.0	53.8	69.5	6.4	16.7
S52F8	38.10	22.23	20.6	37.0	60.7	76.4	6.4	17.3
S52F9	38.10	18.50	20.0	18.5	54.5	71.0	6.5	16.5
S52LSD	38.10	16.40	20.0	17.5	54.5	71.0	6.5	16.5
S52LF2SD	38.10	16.00	20.0	19.0	54.6	76.6	6.5	17.0
S52F12SD	38.10	13.00	20.0	30.0	47.5	83.4	6.4	17.3
S52SDF2	38.10	22.20	20.2	37.2	57.6	86.2	6.5	16.4
S55F2	41.40	22.23	20.0	37.0	58.0	87.0	6.4	17.3
S55F3	41.40	22.23	20.5	33.2	58.0	85.6	6.6	17.3
S55F4	41.40	22.23	20.0	37.0	58.0	87.0	6.6	17.3
S55F6	41.40	22.23	20.0	30.0	58.0	87.0	6.4	17.3
S55F7	41.40	22.23	20.5	33.2	62.0	85.6	6.6	17.3
55VSDF2	41.40	22.23	20.5	33.2	62.0	85.6	8.3	20.0
55VSDF1	41.40	22.23	20.5	33.2	62.0	85.6	6.6	20.0
S55RSDF1	41.40	22.23	20.5	33.2	62.0	85.6	6.6	22.4
S55SDF2	41.40	22.20	20.0	33.4	58.0	86.0	6.6	17.3
S62SD	41.91	26.20	20.0	32.6	61.4	92.0	6.4	17.3

S type steel agricultural chain with attachments
Anbauteile für Landmaschinenketten S-Typ

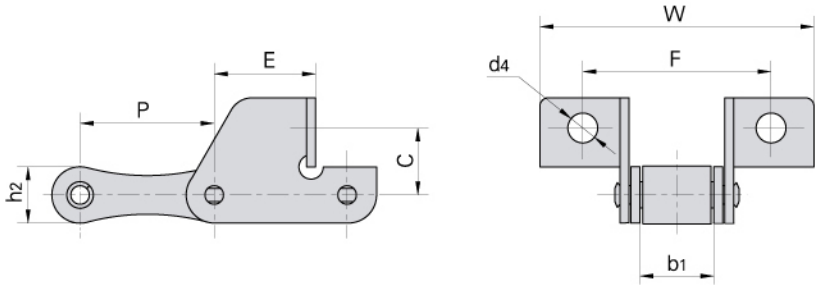

Donghua Chain No. *Donghua Ketten Nr.*	P	b1	C	E	F	W	d4	h2
	mm	mm	mm	mm	mm	mm	mm	mm
S45V	41.4	22.23	21.0	28.5	62.4	83.4	8.8	17.3
S45SDF1	41.4	22.23	17.5	31.9	62.0	91.0	8.5	17.3
S55V	41.4	22.23	21.0	28.5	57.5	83.4	6.5	17.3
S55SDF1	41.4	22.23	20.0	31.9	58.0	89.2	6.5	17.3
S45SDF3	41.4	22.23	16.5	31.9	62.0	91.0	8.5	17.3

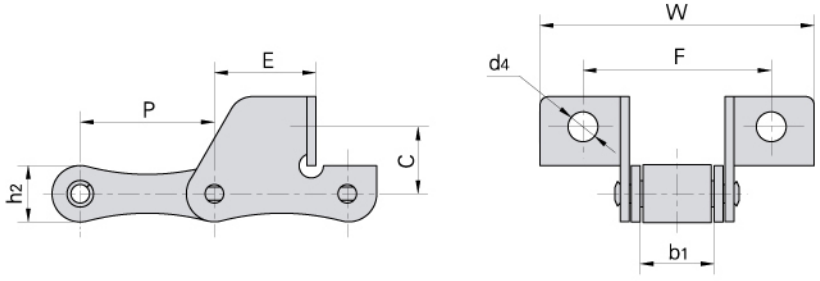

Donghua Chain No. *Donghua Ketten Nr.*	P	b1	C	E	F	W	d4	h2
	mm	mm	mm	mm	mm	mm	mm	mm
S45SD	41.4	22.23	17.00	28.6	58.0	81.2	8.5	17.3
S52SDF1	38.1	15.80	19.56	20.0	56.0	82.0	6.4	17.3

S type steel agricultural chain with attachments
Anbauteile für Landmaschinenketten S-Typ

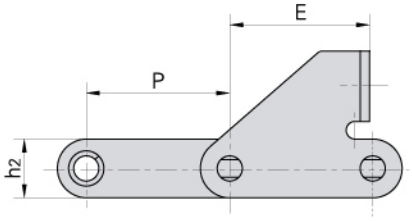

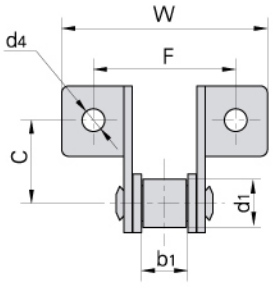

Donghua Chain No. *Donghua Ketten Nr.*	P	d1	b1	C	E	F	W	d4	h2
	mm	mm	mm	mm	mm	mm	mm	mm	mm
S52F11SD	38.1	16.00	17.50	21.0	23.0	55.0	75.0	8.3	20.0
S52F3	38.4	15.88	18.50	24.0	37.4	52.0	73.0	8.7	17.5
C45F1SD	41.4	15.24	22.23	19.7	41.7	58.0	90.0	6.6	17.3

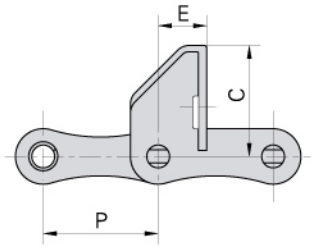

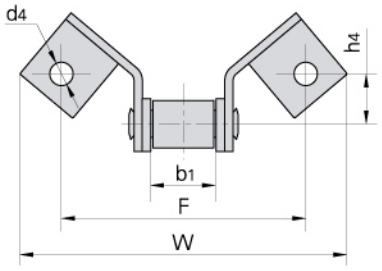

Donghua Chain No. *Donghua Ketten Nr.*	P	b1	C	E	F	W	h4	d4
	mm	mm	mm	mm	mm	mm	mm	mm
55VSE	41.4	22.23	41.0	17.5	88	118	18.44	8.4
55VSEL	41.4	22.23	41.0	31.3	88	118	18.44	8.4
55VSEF1	41.4	22.23	40.0	25.0	88	118	18.00	8.4
CA645SE	41.4	22.23	40.0	17.5	88	118	18.00	8.4

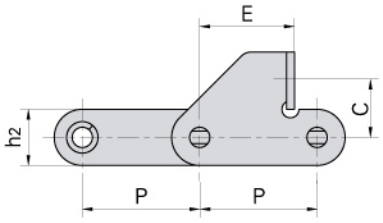

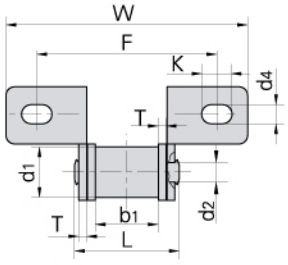

Donghua Chain No. *Donghua Ketten Nr.*	P	C	E	F	W	d4	K
	mm	mm	mm	mm	mm	mm	mm
S55F9SD	41.4	20.5	33.4	62.0	85.4	6.7	10.7

Donghua Chain No. *Donghua Ketten Nr.*	Pitch *Teilung*	Roller diameter *Rollen-durch-messer*	Width between inner plates *Innere Breite*	Pin diameter *Bolzen-durch-messer*	Pin length *Bolzen-länge*	Plate dimension *Laschen-abmessugen*		Ultimate tensile strength *Min. Bruchkraft*	Weight per meter *Gewicht*
	P	d1 max	b1 min	d2 max	L max	h2 max	T	Q min	q
	mm	mm	mm	mm	mm	mm	mm	kN	kg/m
S55F9SD	41.4	17.78	22.2	7.14	37.0	19.8	2.8	35.0/7873	2.7

S type steel agricultural chain with attachments
Anbauteile für Landmaschinenketten S-Typ

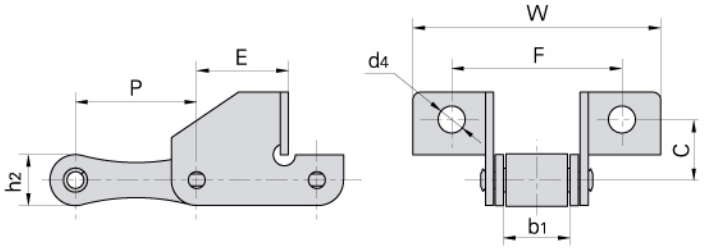

Donghua Chain No. *Donghua Ketten Nr.*	P	b1	C	E	F	W	d4	h2
	mm	mm	mm	mm	mm	mm	mm	mm
S55F1	41.4	22.23	19.0	31.9	62.0	89.2	8.3	17.3
S55RSD	41.4	22.23	19.0	31.9	62.0	89.2	8.3	22.4
S55SDF3	41.4	22.23	17.2	31.9	62.0	92.0	8.3	17.3
S55HSDF1	41.4	22.23	20.6	41.8	64.0	91.0	8.4	20.4
S55RHSDF1	41.4	22.23	25.4	31.5	71.0	101.0	8.5	22.4
S55F10SD	41.4	22.23	20.0	30.0	57.0	90.1	6.5	17.3

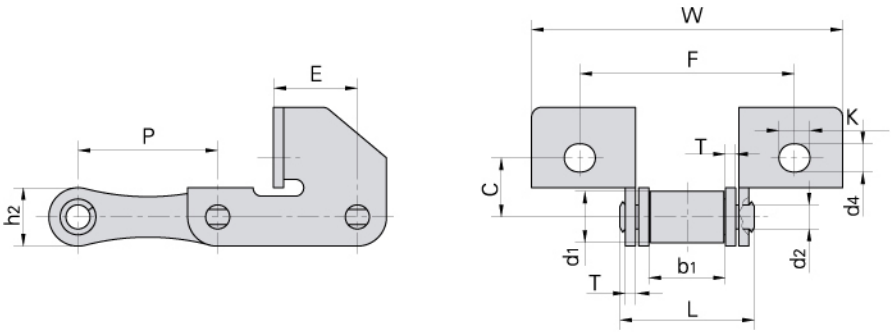

Donghua Chain No. *Donghua Ketten Nr.*	P	C	E	F	W	d4	K
	mm	mm	mm	mm	mm	mm	mm
S45HF1	41.4	17.50	24.9	63.4	92.0	8.3	9.2
S55HSD	41.4	20.60	32.5	64.0	91.0	7.5	10.7

Donghua Chain No. *Donghua Ketten Nr.*	Pitch *Teilung*	Roller diameter *Rollen-durch-messer*	Width between inner plates *Innere Breite*	Pin diameter *Bolzen-durch-messer*	Pin length *Bolzen-länge*	Plate dimension *Laschen-abmessugen*		Ultimate tensile strength *Min. Bruchkraft*	Weight per meter *Gewicht*
	P	d1 max	b1 min	d2 max	L max	h2 max	T	Q min	q
	mm	mm	mm	mm	mm	mm	mm	kN/LB	kg/m
S45HF1	41.4	15.24	22.23	7.14	39.5	17.3	3.0	36.75/8267	2.0
S55HSD	41.4	17.78	22.23	8.28	39.5	20.4	3.0	45.0/10122	2.9

S type steel agricultural chain with attachments
Anbauteile für Landmaschinenketten S-Typ

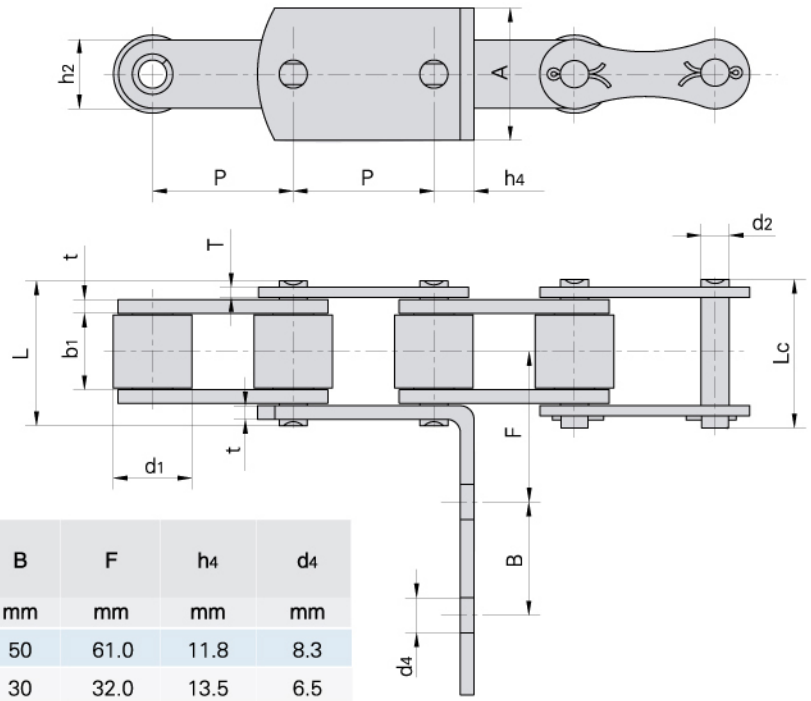

Donghua Chain No. *Donghua Ketten Nr.*	P	A	B	F	h4	d4
	mm	mm	mm	mm	mm	mm
S55HF2	41.4	39.0	50	61.0	11.8	8.3
S55HF1	41.4	30.0	30	32.0	13.5	6.5

Donghua Chain No. *Donghua Ketten Nr.*	Pitch *Teilung*	Roller diameter *Rollen-durch-messer*	Width between inner plates *Innere Breite*	Pin diameter *Bolzen-durch-messer*	Pin length *Bolzen-länge*		Plate dimension *Laschen-abmessugen*		Ultimate tensile strength *Min. Bruchkraft*	Weight per meter *Gewicht*
	P	d1 max	b1 min	d2 max	L max	Lc max	h2 max	t/T	Q min	q
	mm	mm	mm	mm	mm	mm	mm	mm	kN/LB	kg/m
S55HF2	41.4	23.00	22.23	8.28	42.0	45.5	20.0	4.0/3.0	47.5/10685	4.27
S55HF1	41.4	17.78	22.23	8.28	39.5	42.8	20.4	3.0	45/10122	2.90

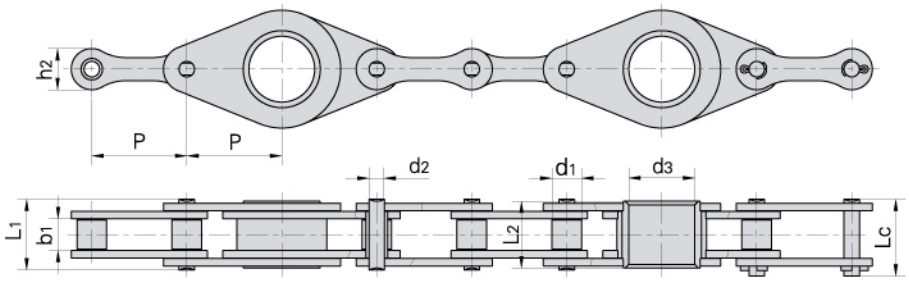

Donghua Chain No. *Donghua Ketten Nr.*	Pitch *Teilung*	Roller diameter *Rollen-durch-messer*	Width between inner plates *Innere Breite*	Pin diameter *Bolzen-durch-messer*	Hollow pin inner diameter *Hohl-bolzen-innen-durchmesser*	Pin length *Bolzen-länge*			Inner plate depth *Innen-laschen-höhe*	Ultimate tensile strength *Min. Bruchkraft*	Average tensile strength *Durchschn. Bruchkraft*
	P	d1 max	b1 min	d2 max	d3 max	L1 max	L2 max	Lc max	h2 max	Q min	Q0
	mm	mm	mm	mm	mm	mm	mm	mm	mm	kN/LB	kN
216BF1	50.8	15.88	17.02	8.28	35.3	37.8	35.8	41.3	22.0	60.0/13636	70.8
CA650F3	50.8	19.05	19.05	9.53	35.3	40.4	37.8	44.7	25.0	90.0/20454	99.0

S type steel agricultural chain with attachments
Anbauteile für Landmaschinenketten S-Typ

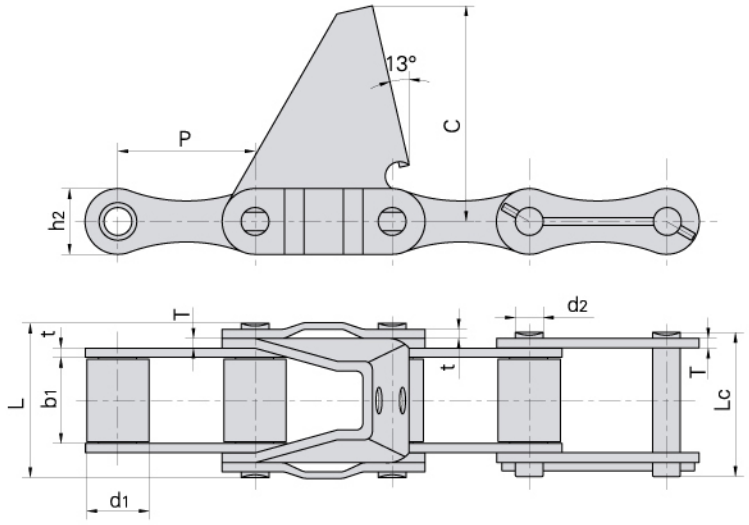

Donghua Chain No. *Donghua Ketten Nr.*	Pitch *Teilung*	Roller diameter *Rollen-durch-messer*	Width between inner plates *Innere Breite*	Pin diameter *Bolzen-durch-messer*	Pin length *Bolzen-länge*		Plate dimension *Laschen-abmessungen*			Ultimate tensile strength *Min. Bruchkraft*	Average tensile strength *Durchschn. Bruchkraft*
	P	d1 max	b1 min	d2 max	L max	Lc max	h2 max	t/T	C	Q min	Q0
	mm	mm	mm	mm	mm	mm	mm	mm	mm	kN/LB	kN
S62R–C6E	41.91	19.05	25.8	8.5	47.8	44.6	20.1	2.8/3.0	66.0	42.0/9448	43.7

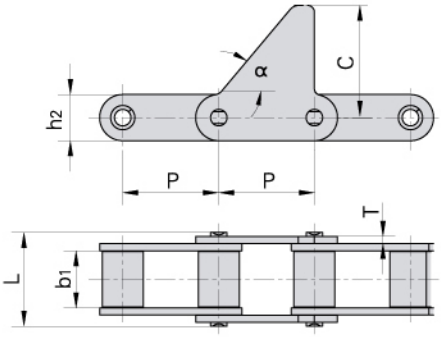

Donghua Chain No. *Donghua Ketten Nr.*	P	b1	C	α	L	T	h2
	mm	mm	mm		mm	mm	mm
S62F1	41.91	25.4	60.0	50°	41.9	3.0	20.0

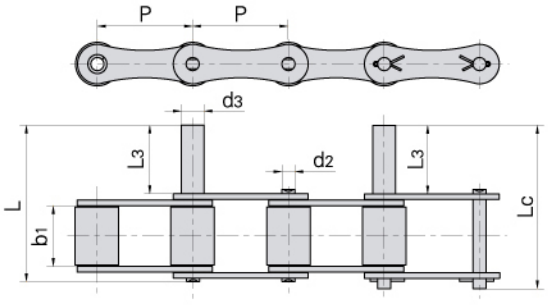

Donghua Chain No. *Donghua Ketten Nr.*	P	b1	d2	d3	L3	L	Lc
	mm	mm	mm	mm	mm	mm	mm
S62–D4	41.91	26.2	5.72	10.00	35	73.8	76.5
S42–D1F1	34.93	19.05	7.00	9.95	25	58.0	61.0
S42–D2	34.93	19.05	7.00	10.00	30	63.0	65.7
S62–D3F1	41.91	26.20	5.72	5.72	18	56.8	59.5

A type steel agricultural chains
Landmaschinenketten A-Typ

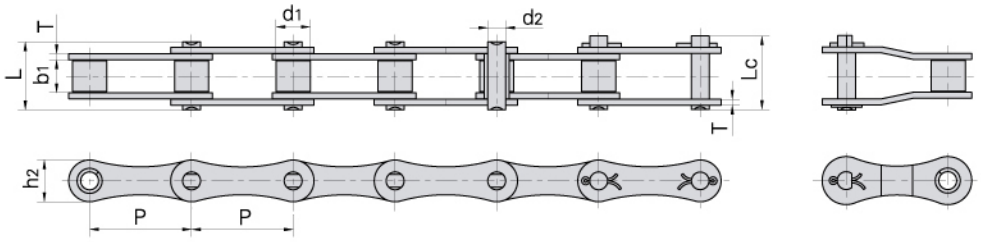

Donghua Chain No. *Donghua Ketten Nr.*	Pitch *Teilung*	Roller diameter *Rollen-durch-messer*	Width between inner plates *Innere Breite*	Pin diameter *Bolzen-durch-messer*	Pin length *Bolzen-länge*		Plate dimension *Laschen-abmessungen*		Ultimate tensile strength *Min. Bruchkraft*	Average tensile strength *Durchschn. Bruchkraft*	Weight per meter *Gewicht*
	P	d_1 max	b_1 min	d_2 max	L max	Lc max	h_2 max	T max	Q min	Q_0	q
	mm	mm	mm	mm	mm	mm	mm	mm	kN/LB	kN	kg/m
A550	41.40	16.87	19.81	7.19	35.0	38.0	19.3	2.80	39.10/8886	51.2	1.79
A555	41.40	16.87	12.70	7.19	29.1	32.0	19.3	3.10	39.10/8886	56.0	1.60
A557	41.40	17.78	20.24	8.00	37.4	40.6	23.1	3.10	55.61/12639	74.3	2.45
A620	42.01	17.91	24.51	7.19	41.8	45.2	20.2	3.25	39.10/8886	55.1	2.18

CA type steel agricultural chains
Landmaschinenketten CA-Typ

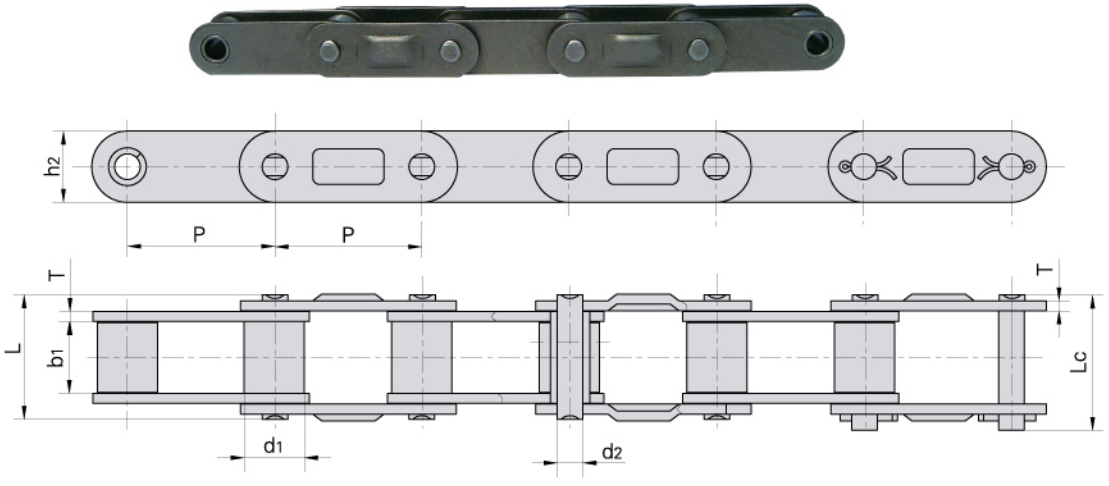

Donghua Chain No. *Donghua Ketten Nr.*	Pitch *Teilung*	Roller diameter *Rollen-durch-messer*	Width between inner plates *Innere Breite*	Pin diameter *Bolzen-durch-messer*	Pin length *Bolzen-länge*		Plate dimension *Laschen-abmessungen*		Ultimate tensile strength *Min. Bruchkraft*	Average tensile strength *Durchschn. Bruchkraft*	Weight per meter *Gewicht*
	P	d_1 max	b_1 min	d_2 max	L max	Lc max	h_2 max	T max	Q min	Q_0	q
	mm	mm	mm	mm	mm	mm	mm	mm	kN/LB	kN	kg/m
CA627	30.00	15.88	19.05	8.28	36.1	39.4	20.5	3.00	50.0/11247	55.0	2.51
CA550D	41.40	16.87	19.81	7.19	35.0	38.0	19.3	2.80	39.10/8886	51.2	1.94
CA555D	41.40	16.87	12.70	7.19	29.1	32.0	19.3	3.10	39.10/8886	56.0	1.72
CA557D	41.40	17.78	20.24	8.00	37.4	40.6	23.1	3.10	55.61/12639	74.3	2.60
CA620D	42.01	17.91	24.51	7.19	41.8	45.2	20.2	3.25	39.10/8886	55.1	2.35

CA type steel agricultural chains
Landmaschinenketten CA-Typ

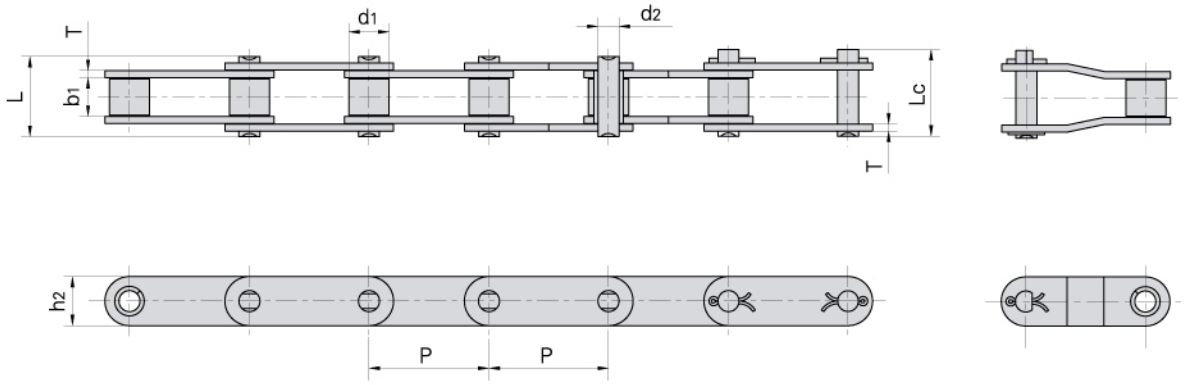

Donghua Chain No. *Donghua Ketten Nr.*	*Pitch* Teilung P	*Roller diameter* Rollen-durch-messer d_1 max	*Width between inner plates* Innere Breite b_1 min	*Pin diameter* Bolzen-durch-messer d_2 max	*Pin length* Bolzen-länge L max	 Lc max	*Plate dimension* Laschen-abmessungen h_2 max	 T max	*Ultimate tensile strength* Min. Bruchkraft Q min	*Average tensile strength* Durchschn. Bruchkraft Q_0	*Weight per meter* Gewicht q
	mm	mm	mm	mm	mm	mm	mm	mm	kN/LB	kN	kg/m
CA550	41.400	16.87	19.81	7.19	35.0	38.0	19.30	2.80	39.10/8886	51.2	1.94
CA550V	41.400	16.80	19.05	8.28	36.1	39.1	22.00	3.00	55.00/12499	68.7	2.24
CA555	41.400	16.87	12.70	7.19	29.1	32.0	19.30	3.10	39.10/8886	56.0	1.72
CA557	41.400	17.78	20.24	8.00	37.4	40.6	23.10	3.10	55.61/12639	74.3	2.60
CA620	42.010	17.91	24.51	7.19	41.8	45.2	20.20	3.25	39.10/8886	55.1	2.35
CA2060H	38.100	11.91	12.70	5.94	29.2	31.6	18.00	3.25	31.10/6996	40.5	1.45
CA2063H	38.100	11.89	12.70	5.94	29.4	34.2	19.30	3.25	31.28/7109	40.5	1.65
CA550F4	41.400	14.35	20.24	7.14	35.0	38.5	19.05	2.80	50.00/11363	52.0	1.76
CA550F5	41.400	16.66	20.24	7.14	35.0	38.5	19.05	2.80	45.00/10227	52.0	1.97
CAE44151	28.575	15.88	16.20	7.92	33.5	36.9	22.20	3.25	58.80/13363	64.5	2.73
38.4R	38.400	15.88	19.05	6.92	33.8	36.4	17.30	2.50	33.00/7480	41.2	1.70
38.4V	38.400	15.88	18.00	6.92	35.0	38.0	17.30	3.00	40.00/9091	50.0	1.83
38.4VB	38.400	15.88	19.05	8.28	36.1	39.4	20.50	3.00	50.00/11363	62.5	2.17
55VD	41.400	17.90	23.00	8.22	39.3	42.4	20.00	2.80	42.00/9546	45.0	2.34
S62F3	41.910	19.05	25.40	8.00	42.0	44.6	26.00	3.00	47.00/10796	58.7	3.12
CA960	41.400	17.78	22.61	8.90	40.1	43.0	23.10	3.00	66.00/15160	72.6	6.94
CA550VF2	41.400	16.80	19.05	8.28	36.1	38.8	20.00	3.00	55.00/12499	68.7	2.13
CA550H	41.400	16.74	20.00	7.14	36.0	39.1	19.10	3.00	57.82/13000	60.8	2.00

C type steel agricultural chain with attachments
Anbauteile für Landmaschinenketten C-Typ

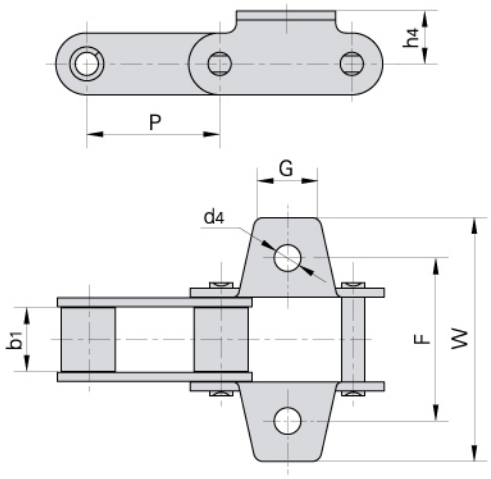

Donghua Chain No. *Donghua Ketten Nr.*	P	b_1	G	F	W	h_4	d_4
	mm	mm	mm	mm	mm	mm	mm
38.4VK1	38.4	18.00	22.00	57.5	82.00	15.4	9.00
38.4RK1F1	38.4	19.05	22.00	58.0	83.00	15.4	9.00
38.4VF3K1	38.4	18.00	20.00	58.0	79.00	15.4	9.00
38.4RK1F2	38.4	19.05	22.00	57.5	82.00	16.0	9.00
CA550F2	41.4	19.50	22.00	50.8	72.00	14.7	8.50
CA550K1F1	41.4	19.81	20.00	54.0	76.20	16.5	8.30
CA550K1F2	41.4	19.81	20.00	50.8	76.20	16.5	8.30
CA550K25	41.4	19.81	22.23	50.8	71.40	12.7	8.70
CA557K1	41.4	20.24	22.00	50.8	72.00	15.9	8.70
CA550VK1	41.4	19.05	27.00	54.0	75.54	16.5	8.50
CA550VK1F1	41.4	19.05	27.00	50.8	75.54	16.5	8.50
CA550F4K19	41.4	20.24	22.23	50.8	77.80	12.7	6.75
CA550K29F1	41.4	19.81	22.20	50.8	75.40	12.7	10.30
CA550AK29M	41.4	19.81	26.20	50.8	75.40	16.5	10.24
CA550K1F7	41.4	19.81	26.20	50.8	75.40	16.5	8.40
CA550A29	41.4	19.81	22.23	50.8	71.40	12.7	9.92
CA550VF2K1	41.4	19.05	27.18	51.0	75.54	16.5	8.33
CA550F5AK29M	41.4	20.24	26.20	50.8	75.40	16.5	10.24
CA550F5K29F1	41.4	20.24	22.00	50.8	75.40	12.7	10.30
CA550F5K1	41.4	20.24	22.20	54.0	71.50	12.7	8.50
CA557K1F2	41.4	20.24	22.00	50.8	72.00	15.9	8.30
38.4RK1F3	38.4	19.05	20.00	58.0	84.40	15.5	8.50
38.4RK1F4	38.4	19.05	20.00	57.0	75.00	16.0	8.50
38.4RK1F7	38.4	19.05	22.00	57.5	82.00	16.0	10.50
38.4VK1F9	38.4	18.00	22.00	56.8	82.00	16.3	8.70
38.4VK1F6	38.4	18.00	22.00	56.8	74.80	16.3	8.50
38.4VK1F7	38.4	18.00	22.00	57.5	82.00	15.4	8.40

C type steel agricultural chain with attachments
Anbauteile für Landmaschinenketten C-Typ

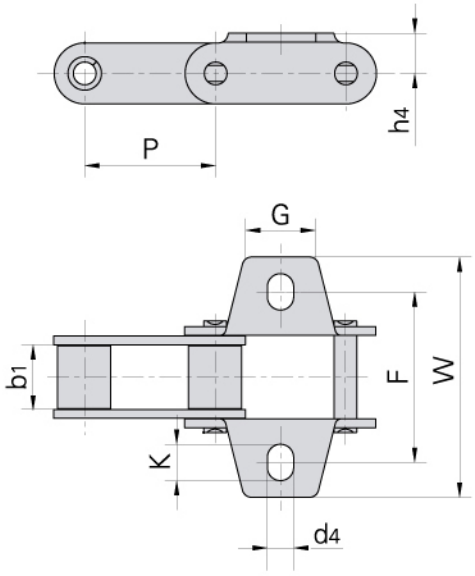

Donghua Chain No. *Donghua Ketten Nr.*	P	b1	G	F	W	h4	d4	K
	mm	mm	mm	mm	mm	mm	mm	mm
CA550K1	41.4	19.81	22.00	52.5	76.2	12.7	8.3	10.0
CA550K1F3	41.4	19.81	22.00	54.0	76.2	12.7	8.3	11.5
CA550F4K19F1	41.4	20.24	22.23	52.5	76.2	12.7	8.3	10.0
CA550K1F9	41.4	19.81	22.00	50.8	76.2	12.7	8.3	11.7
CA555K1	41.4	12.70	22.00	52.5	76.2	12.7	8.3	10.0

Donghua Chain No. *Donghua Ketten Nr.*	P	b1	G	F	W	h4	d4
	mm	mm	mm	mm	mm	mm	mm
38.4RK1	38.4	19.05	29.1	58.0	76.5	15.1	10.5
38.4VK1F1	38.4	18.00	29.1	57.0	75.0	15.1	8.5
38.4VBK1	38.4	19.05	29.0	58.0	87.0	14.0	10.5
38.4VBF3	38.4	19.05	40.0	57.0	86.0	16.0	10.3
38.4VK1F2	38.4	18.00	29.1	57.0	75.0	15.1	10.5
38.4VK1F3	38.4	18.00	29.1	57.0	75.0	15.1	9.0
CA550HK1	41.4	20.00	22.6	54.0	71.5	12.7	8.5
CA550VK18	41.4	19.05	22.6	54.0	71.6	12.7	8.5
CA550K18	41.4	19.81	22.6	54.0	71.6	12.7	8.5
38.4RK1F6	38.4	19.05	40.0	57.0	84.0	16.5	10.3
38.4VK1F10	38.4	18.00	39.0	58.4	82.4	14.5	10.5
38.4VBK1F3	38.4	19.05	39.0	57.0	80.0	16.0	10.5

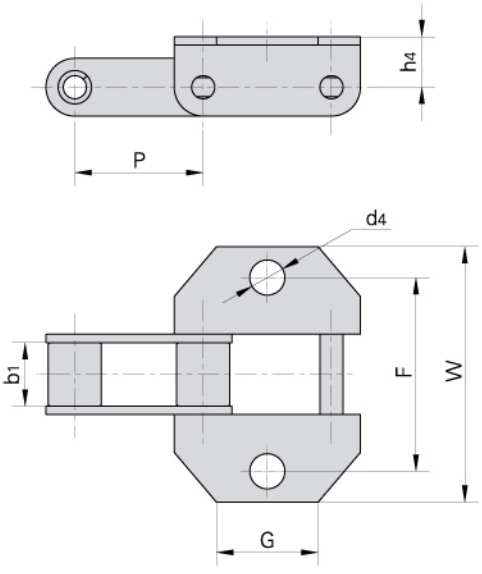

C type steel agricultural chain with attachments
Anbauteile für Landmaschinenketten C-Typ

Donghua Chain No. *Donghua Ketten Nr.*	P	b1	G	F	W	h4	d4
	mm	mm	mm	mm	mm	mm	mm
CA550K1F4	41.40	19.81	48.5	54.0	76.20	16.5	8.5
CA550VK1F3	41.40	19.05	56.0	54.0	75.54	16.5	8.5
CA550K1F6	41.40	19.81	48.5	54.0	76.20	16.5	10.5
CA550K18	41.40	19.81	22.6	54.0	71.60	12.7	8.5
CA620A1F1	42.01	24.51	63.5	67.7	91.70	16.1	10.5
38.4VK1F8	38.40	18.00	40.0	57.0	86.00	16.0	10.5
38.4VBF5	38.40	19.05	40.0	57.0	86.00	14.0	10.5
38.4VBF6	38.40	19.05	20.0	57.0	75.00	16.0	8.6
38.4VBF7	38.40	19.05	40.0	58.5	86.60	14.0	10.5

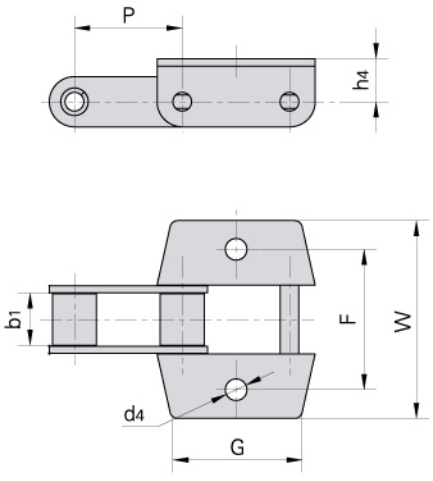

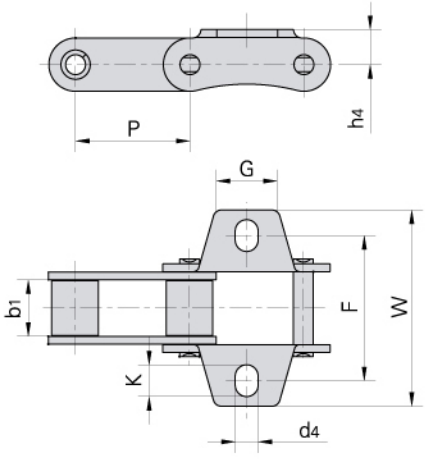

Donghua Chain No. *Donghua Ketten Nr.*	P	b1	G	F	W	h4	d4	K
	mm	mm	mm	mm	mm	mm	mm	mm
CA550K19	41.4	19.81	22.0	50.8	71.0	12.7	8.3	11.0
CA550K19F1	41.4	19.81	22.0	54.0	71.0	12.7	8.3	11.0
CA550K19F2	41.4	19.81	25.4	50.8	71.0	12.7	8.4	11.5



C type steel agricultural chain with attachments
Anbauteile für Landmaschinenketten C-Typ

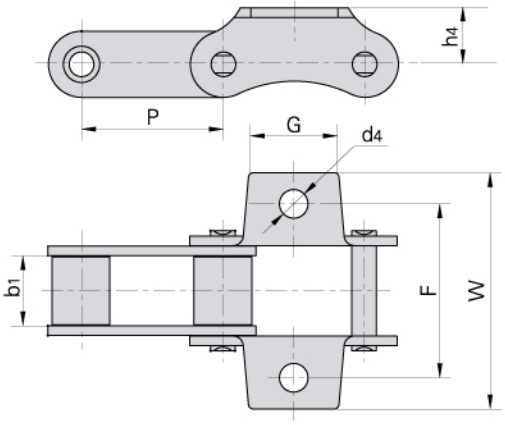

Donghua Chain No. *Donghua Ketten Nr.*	P	b1	G	F	W	h4	d4
	mm	mm	mm	mm	mm	mm	mm
CA550F1	41.4	19.81	22.23	53.95	70.6	12.7	9.90
CA550K19F3	41.4	19.81	25.50	50.80	68.4	16.5	8.33
CA550VK19F1	41.4	19.05	25.50	50.80	67.8	16.5	8.33
CA557AK4	41.4	20.24	26.19	50.80	69.4	16.5	8.33

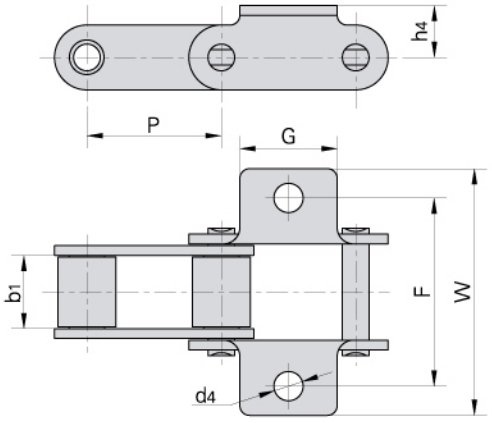

Donghua Chain No. *Donghua Ketten Nr.*	P	b1	G	F	W	h4	d4
	mm	mm	mm	mm	mm	mm	mm
55VDK1	41.40	23.00	30.0	50.8	76.0	16.0	9.0
CA550A1F5	41.40	19.81	38.1	74.6	105.6	12.7	10.3
CA557A1F1	41.40	20.24	38.1	74.6	105.6	12.7	10.3
S77F1K1	58.34	22.23	40.0	77.0	128.0	20.0	10.5
S77F2K1	58.34	22.23	40.0	77.0	132.0	25.0	10.5

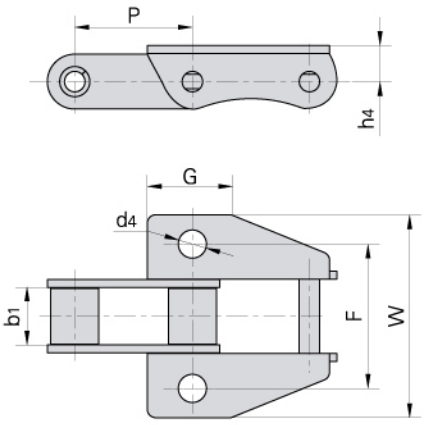

Donghua Chain No. *Donghua Ketten Nr.*	P	b1	G	F	W	h4	d4
	mm	mm	mm	mm	mm	mm	mm
CA550K39M	41.4	19.81	29.5	50.80	71.4	12.7	9.8
CA550K39MF3	41.4	19.81	29.5	50.80	71.4	12.7	10.3
CA550HK39M	41.4	20.00	31.0	57.00	78.0	14.2	10.5
CA557K39M	41.4	20.24	29.5	50.80	71.4	12.7	9.8
CA557K39MF1	41.4	20.24	22.0	57.15	77.6	14.0	9.9
CA557K39MF3	41.4	20.24	31.0	57.00	78.0	14.5	10.3
CA550F5K39M	41.4	20.24	29.5	50.80	71.4	12.7	10.3

C type steel agricultural chain with attachments
Anbauteile für Landmaschinenketten C-Typ

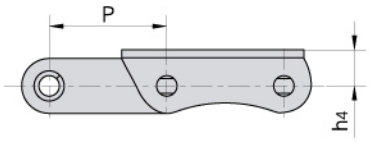

Donghua Chain No. / *Donghua Ketten Nr.*	P	b1	G	F	W	h4	d4	K
	mm	mm	mm	mm	mm	mm	mm	mm
CA550K39MF2	41.4	19.81	29.5	50.80	71.4	12.7	9.9	13
CA557K39MF2	41.4	20.24	29.5	50.80	71.4	12.7	9.9	13
CA557K39MF6	41.4	20.24	29.5	53.98	74.5	12.7	9.9	13

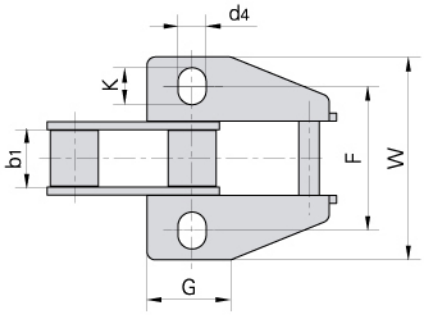

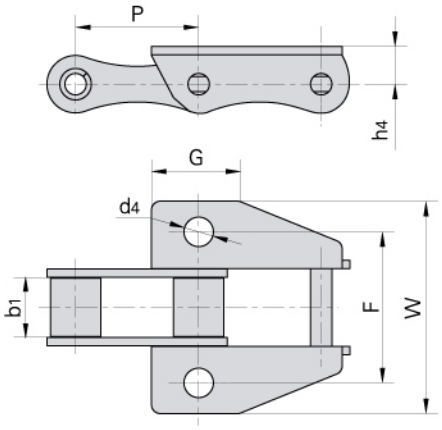

Donghua Chain No. / *Donghua Ketten Nr.*	P	b1	G	F	W	h4	d4
	mm	mm	mm	mm	mm	mm	mm
A557K39M	41.4	20.24	29.5	56.70	77.8	13.5	10.10
A557K39MF2	41.4	20.24	29.5	56.70	77.8	13.5	10.50
A557K39MF1	41.4	20.24	31.0	57.15	78.0	14.2	10.50
A557K35M	41.4	20.24	30.0	50.80	73.5	14.1	10.31
A557K39MF4	41.4	20.24	29.5	56.70	77.8	13.5	10.30
A557K39MF7	41.4	20.24	29.5	63.00	88.0	13.5	11.00
A557F1K39M	41.4	20.24	31.0	57.00	78.0	14.2	10.50

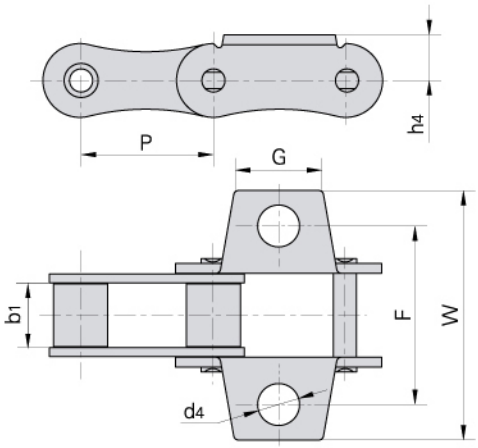

Donghua Chain No. / *Donghua Ketten Nr.*	P	b1	G	F	W	h4	d4
	mm	mm	mm	mm	mm	mm	mm
A557K27S	41.4	20.24	28.6	57.15	79.35	14.3	13.1

C type steel agricultural chain with attachments
Anbauteile für Landmaschinenketten C-Typ

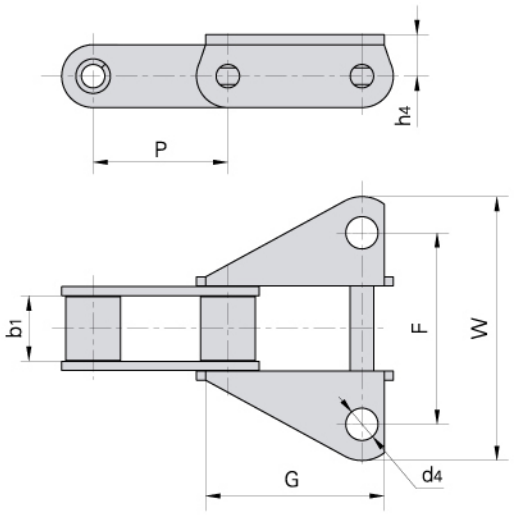

Donghua Chain No. *Donghua Ketten Nr.*	P	b1	G	F	W	h4	d4
	mm	mm	mm	mm	mm	mm	mm
CA557F1	41.4	20.24	60.0	53.94	76.2	14.6	9.9

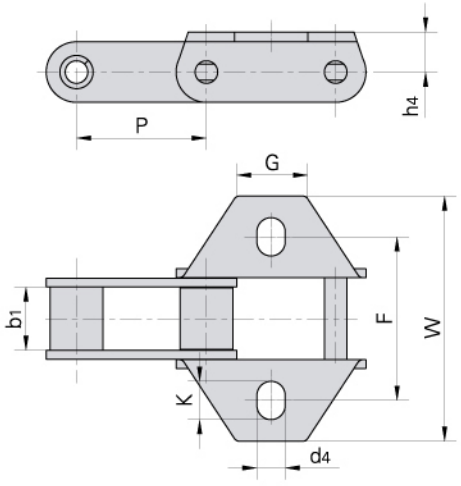

Donghua Chain No. *Donghua Ketten Nr.*	P	b1	G	F	W	h4	d4	K
	mm	mm	mm	mm	mm	mm	mm	mm
CA557F2	41.4	20.24	22.23	53.98	79.3	14.3	9.9	13.6

C type steel agricultural chain with attachments
Anbauteile für Landmaschinenketten C-Typ

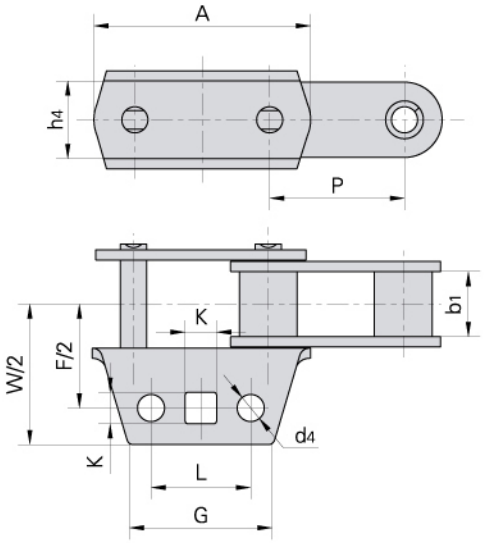

Donghua Chain No. *Donghua Ketten Nr.*	P	b1	A	L	G	F	W	h4	d4	K
	mm	mm	mm	mm	mm	mm	mm	mm	mm	mm
CA557F3	41.4	20.24	66.55	30.22	44.45	64.14	86.6	23.9	8.25	9.7

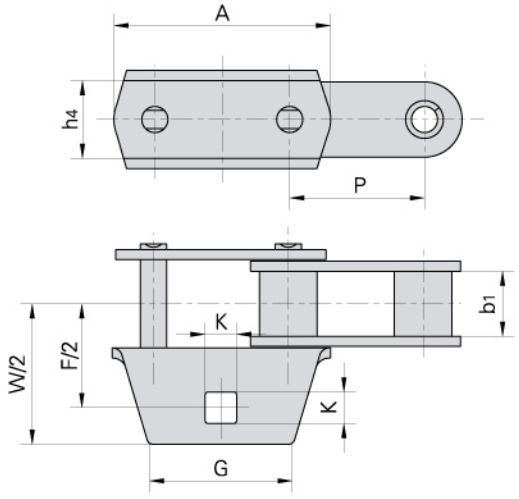

Donghua Chain No. *Donghua Ketten Nr.*	P	b1	A	G	F	W	h4	K
	mm	mm	mm	mm	mm	mm	mm	mm
CA557F4	41.4	20.24	66.55	44.45	64.14	86.6	23.9	9.7

C type steel agricultural chain with attachments
Anbauteile für Landmaschinenketten C-Typ

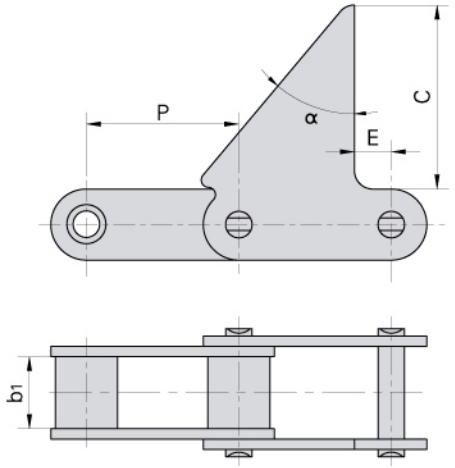

Donghua Chain No. *Donghua Ketten Nr.*	P	b1	C	α	E
	mm	mm	mm		mm
CA550F6	41.4	19.81	50.0	40°	10
CA550F9	41.4	19.81	40.7	40°	10

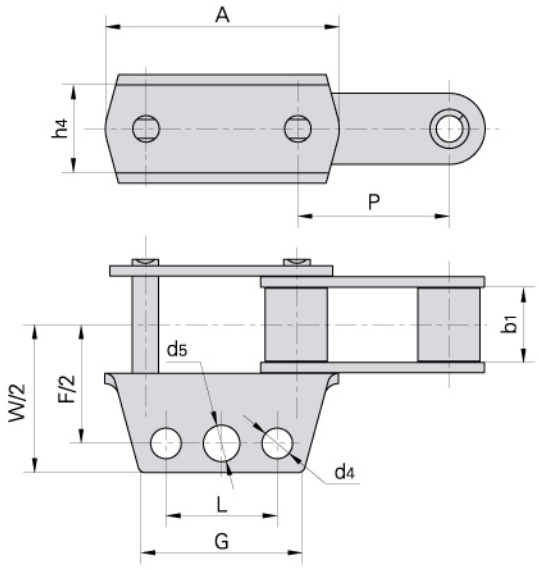

Donghua Chain No. *Donghua Ketten Nr.*	P	b1	A	L	G	F	W	h4	d4	d5
	mm	mm	mm	mm	mm	mm	mm	mm	mm	mm
CA550F7	41.4	19.81	63.5	30.22	44.45	64.1	81.4	23.88	8.25	9.9

C type steel agricultural chain with attachments
Anbauteile für Landmaschinenketten C-Typ

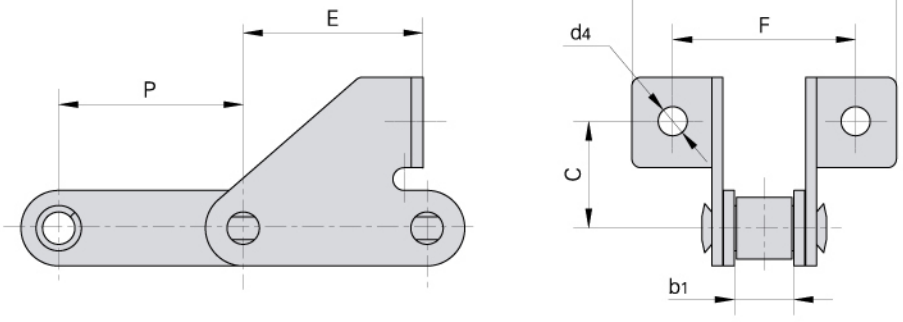

Donghua Chain No. *Donghua Ketten Nr.*	P	b1	E	F	W	C	d4
	mm	mm	mm	mm	mm	mm	mm
38.4RSD	38.4	19.05	38.4	52.0	71.0	24.5	8.4
38.4RSDF1	38.4	19.05	38.4	52.0	70.0	24.5	8.4
38.4RSDF2	38.4	19.05	38.4	52.0	71.0	24.5	9.0
38.4VSD	38.4	18.00	38.4	52.0	71.0	24.0	8.4
38.4VBSD	38.4	19.05	38.4	52.0	71.0	25.0	8.4
38.4VBSDF1	38.4	19.05	38.4	52.0	73.0	24.0	8.3
38.4VBSDF2	38.4	19.05	38.4	52.0	73.0	24.0	8.4
38.4VBSDF3	38.4	15.88	38.4	52.0	70.1	24.5	8.5
38.4RSDF4	38.4	19.05	37.4	52.0	71.0	24.0	8.4
38.4RSDF5	38.4	19.05	35.9	60.0	79.0	24.0	6.4
38.4RSDF6	38.4	19.05	38.4	62.0	81.0	24.5	8.5
38.4RSDF7	38.4	19.05	38.4	60.0	81.0	24.5	8.4
38.4RSDF8	38.4	19.05	38.4	60.0	81.0	24.5	6.4
38.4VBSDF5	38.4	19.05	37.4	52.0	73.0	24.0	8.7
CA550SD	41.1	19.81	36.9	47.6	68.2	31.0	8.7
CA550SDF4	41.4	19.81	36.9	47.6	89.0	31.0	8.7
CA550SDF10	41.4	19.81	37.7	47.6	68.2	31.0	8.5
CA550F5SDF1	41.4	20.24	36.9	47.6	68.2	31.0	8.7

C type steel agricultural chain with attachments
Anbauteile für Landmaschinenketten C-Typ

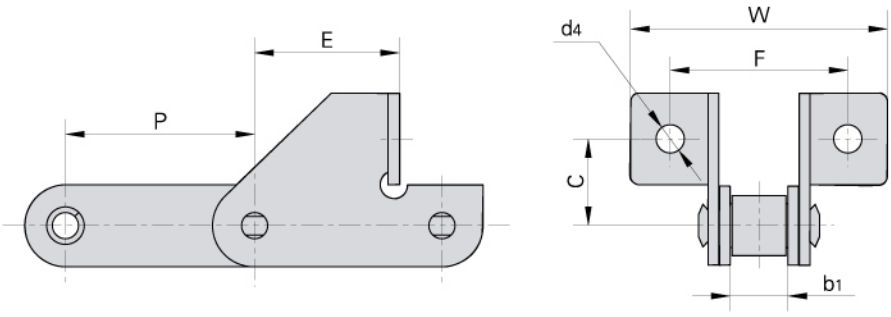

Donghua Chain No. *Donghua Ketten Nr.*	P	b1	E	F	W	C	d4
	mm	mm	mm	mm	mm	mm	mm
CA550SDF1	41.4	19.81	35.0	58.0	85.0	20.5	8.5
CA550SDF2	41.4	19.81	32.5	62.0	84.0	20.0	8.6
CA550SDF3	41.4	19.81	35.0	58.0	85.0	20.5	6.5
CA550SDF6	41.4	19.81	33.0	58.0	85.0	20.5	6.5
CA550SDF7	41.4	19.81	32.5	62.0	89.0	20.0	8.6
CA550F5SD	41.1	20.24	33.0	57.8	83.5	20.0	6.7
CA550F8SD	41.4	19.81	33.0	58.0	85.9	20.5	6.5
CA550SDF5	41.4	19.81	34.0	63.0	89.0	20.0	8.0
CA550SDF11	41.4	19.81	31.0	58.0	85.0	20.5	8.5
CA550SDF12	41.4	19.81	31.0	58.0	85.0	20.5	6.5
CA550HSD	41.4	20.00	33.4	58.0	90.0	20.0	6.5
CA550VSD	41.4	19.05	35.0	58.0	88.6	20.5	6.5





C type steel agricultural chain with attachments
Anbauteile für Landmaschinenketten C-Typ



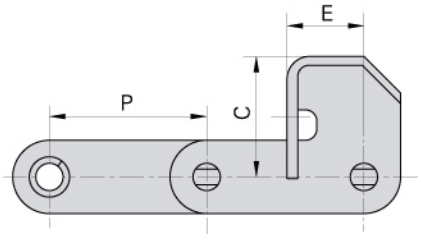

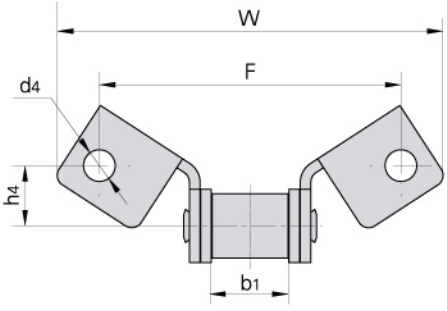

Donghua Chain No. *Donghua Ketten Nr.*	P	b1	E	C	F	W	h4	d4
	mm	mm	mm	mm	mm	mm	mm	mm
CA550F14	41.4	19.80	20.24	31.75	79.40	101.60	15.90	8.33
CA550F16	41.4	20.00	22.30	39.00	78.00	109.20	17.70	8.00
CA550VF14	41.4	19.05	20.24	31.75	79.40	101.60	15.90	8.33
CA550F5–F14	41.4	20.24	20.24	31.75	79.40	101.60	15.90	8.33
CA550F5–F14SF	41.4	20.24	21.34	31.75	79.40	101.60	15.90	9.91
CA557F14	41.4	20.24	19.60	34.00	79.40	109.80	15.88	8.60
CA557SFD	41.4	20.24	24.30	50.10	79.40	109.80	28.60	8.30
CA557SFDF1	41.4	20.24	24.30	50.10	79.40	109.80	28.60	9.53

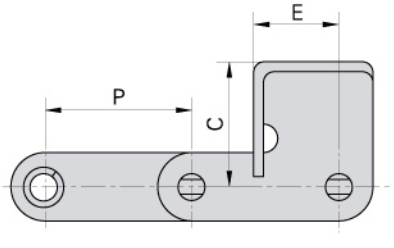

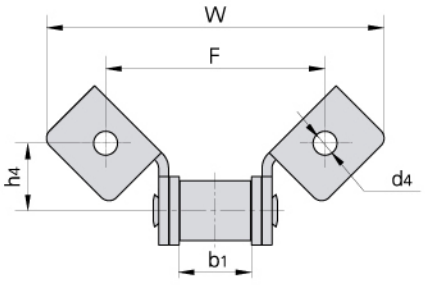

Donghua Chain No. *Donghua Ketten Nr.*	P	b1	E	C	F	W	h4	d4
	mm	mm	mm	mm	mm	mm	mm	mm
CA550F15	41.4	19.81	24.00	35.26	61.98	95.25	19.05	6.73
CA550F17	41.4	19.81	23.68	40.89	114.30	143.70	20.57	9.91
CA550VF13	41.4	19.05	25.40	59.60	79.35	135.45	28.60	8.74
CA550F18	41.4	19.81	24.00	35.26	61.98	95.25	19.05	8.33
CA550F5–F17	41.4	20.24	23.68	40.89	114.30	143.70	20.57	9.91
CA550F5–G18	41.4	20.24	24.13	20.32	63.50	84.00	8.38	8.38

C type steel agricultural chain with attachments
Anbauteile für Landmaschinenketten C-Typ

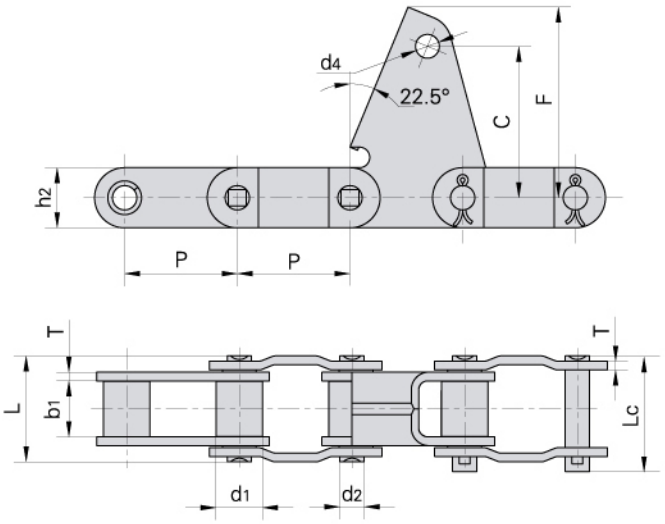

Donghua Chain No. *Donghua Ketten Nr.*	Pitch *Teilung*	Roller diameter *Rollen-durch-messer*	Width between inner plates *Innere Breite*	Pin diameter *Bolzen-durch-messer*	Pin length *Bolzen-länge*		Plate dimension *Laschen-abmessugen*					Ultimate tensile strength *Min. Bruchkraft*	Weight per meter *Gewicht*
	P	d_1 max	b_1 min	d_2 max	L max	Lc max	h_2 max	T max	C	F	d_4	Q min	q
	mm	mm	mm	mm	mm	mm	mm	mm	mm	mm	mm	kN/LB	kg/m
38.4VBF2	38.4	15.88	19.05	8.28	36.1	39.1	20.5	3.0	51.6	65	8.1	50/11247	2.33

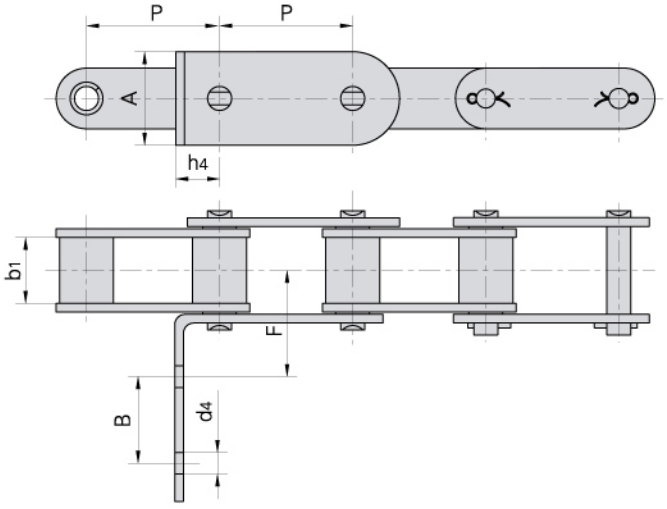

Donghua Chain No. *Donghua Ketten Nr.*	P	b_1	A	B	F	h_4	d_4
	mm	mm	mm	mm	mm	mm	mm
38.4RF2	38.4	19.05	27.0	25	31.3	12.7	6.8

C type steel agricultural chain with attachments
Anbauteile für Landmaschinenketten C-Typ

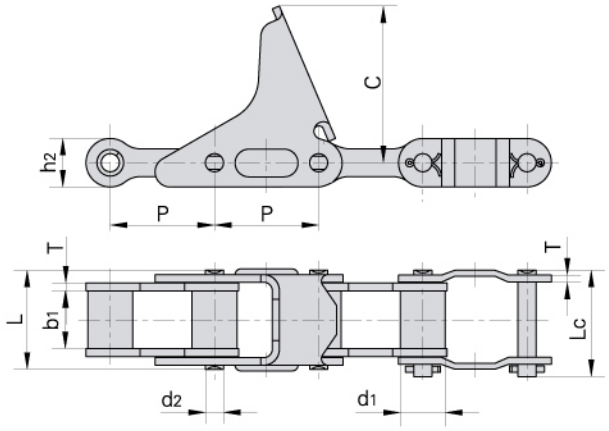

Donghua Chain No. *Donghua Ketten Nr.*	Pitch *Teilung*	Roller diameter *Rollen-durch-messer*	Width between inner plates *Innere Breite*	Pin diameter *Bolzen-durch-messer*	Pin length *Bolzen-länge*		Plate dimension *Laschen-abmessugen*			Ultimate tensile strength *Min. Bruchkraft*	Weight per meter *Gewicht*
	P	d1 max	b1 min	d2 max	L max	Lc max	h2 max	T max	C max	Q min	q
	mm	mm	mm	mm	mm	mm	mm	mm	mm	kN/LB	kg/m
CA555F1	41.4	17.85	23.0	8.2	39.5	42.4	20.0	3.0	84.0	39.1/8795	2.99
CA555F2	41.4	17.85	23.0	8.2	39.5	42.4	20.0	3.0	62.5	39.1/8795	2.82

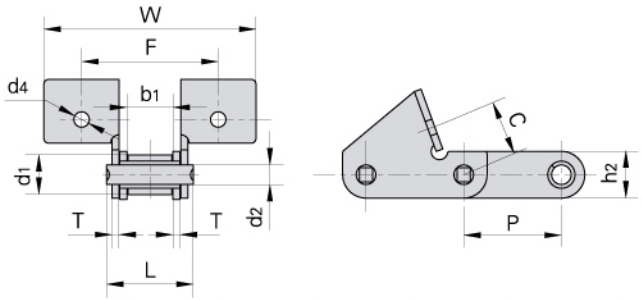

Donghua Chain No. *Donghua Ketten Nr.*	P	C	F	W	d4
	mm	mm	mm	mm	mm
CA550VF1	41.4	23.4	58	90.0	6.5
CA550F10	41.4	23.4	58	90.0	6.5
CA550HF4	41.4	23.4	58	90.0	6.5

Donghua Chain No. *Donghua Ketten Nr.*	Pitch *Teilung*	Roller diameter *Rollen-durch-messer*	Width between inner plates *Innere Breite*	Pin diameter *Bolzen-durch-messer*	Pin length *Bolzen-länge*	Plate depth *Laschen-höhe*	Plate thickness *Laschen-dicke*	Ultimate tensile strength *Min. Bruchkraft*	Weight per meter *Gewicht*
	P	d1 max	b1 min	d2 max	L max	h2 max	T	Q min	q
	mm	mm	mm	mm	mm	mm	mm	kN/LB	kg/m
CA550VF1	41.4	16.80	19.50	8.28	36.7	19.80	3.0	44/9898	2.50
CA550F10	41.4	16.70	19.81	7.14	36.2	19.05	3.0	53/11922	2.38
CA550HF4	41.4	16.74	20.00	7.14	36.0	19.10	3.0	57.78/12998	2.73

C type steel agricultural chain with attachments
Anbauteile für Landmaschinenketten C-Typ

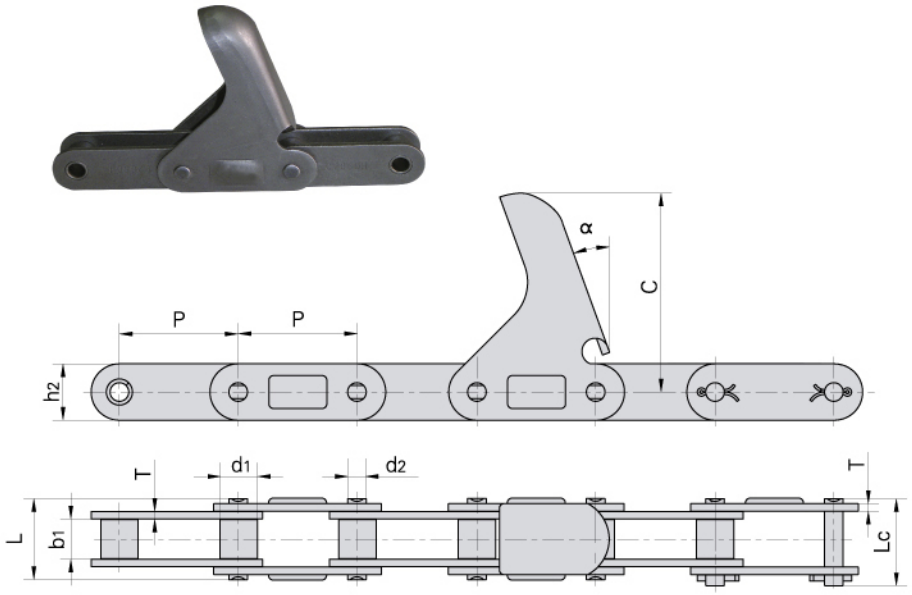

Donghua Chain No. *Donghua Ketten Nr.*	Pitch *Teilung*	Roller diameter *Rollen-durch-messer*	Width between inner plates *Innere Breite*	Pin diameter *Bolzen-durch-messer*	Pin length *Bolzen-länge*		Plate dimension *Laschen-abmessugen*				Ultimate tensile strength *Min. Bruchkraft*	Weight per meter *Gewicht*
	P	d_1 max	b_1 min	d_2 max	L max	Lc max	h_2 max	T	C	α	Q min	q
	mm	mm	mm	mm	mm	mm	mm	mm	mm		kN/LB	kg/m
CA2060–C6E	38.1	11.91	12.57	5.94	25.9	28.3	18.0	2.42	63.5	20.0°	31.1/6996	1.40
CA2060H–C6E	38.1	11.91	12.57	5.94	31.0	31.6	18.0	3.25	63.5	22.5°	31.1/6996	1.78

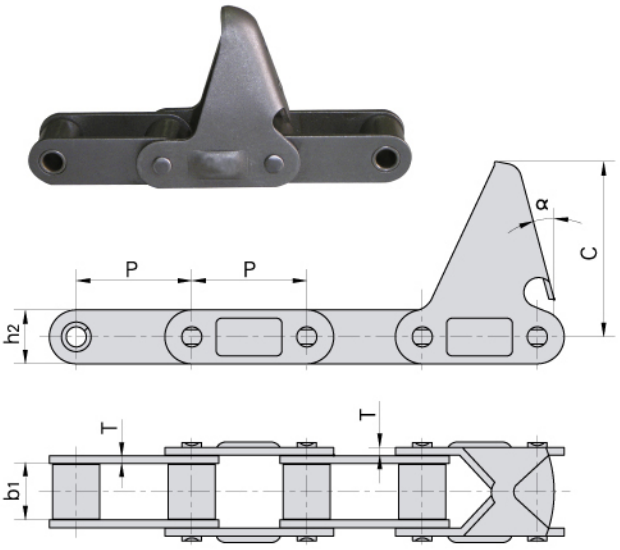

Donghua Chain No. *Donghua Ketten Nr.*	P	b_1	h_2	T	C	α
	mm	mm	mm	mm	mm	
CA550–C6E	41.40	19.81	19.30	2.80	55.6	20°
CA550–C11E	41.40	19.81	19.30	2.80	63.5	15°
CA550–C11EJ	41.40	19.81	19.30	2.80	66.0	17°
CA550–C13E	41.40	19.81	19.30	2.80	92.0	15°
CA550F4–C6E	41.40	20.24	19.05	2.80	55.6	22.5°
CA550–C6EF1	41.40	19.81	19.30	2.80	50.0	15°
CA620–C13E	42.01	24.51	20.20	3.25	92.0	15°

C type steel agricultural chain with attachments
Anbauteile für Landmaschinenketten C-Typ

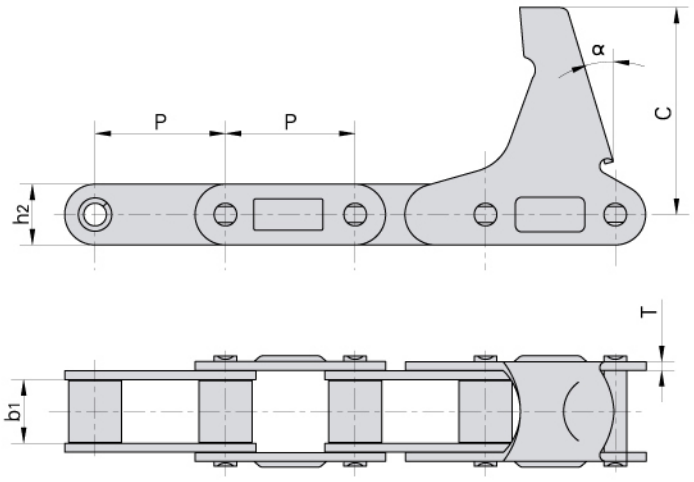

Donghua Chain No. *Donghua Ketten Nr.*	P	b1	h2	T	C	α
	mm	mm	mm	mm	mm	
CA550–LV41N	41.4	19.81	19.3	2.8	68.5	15°

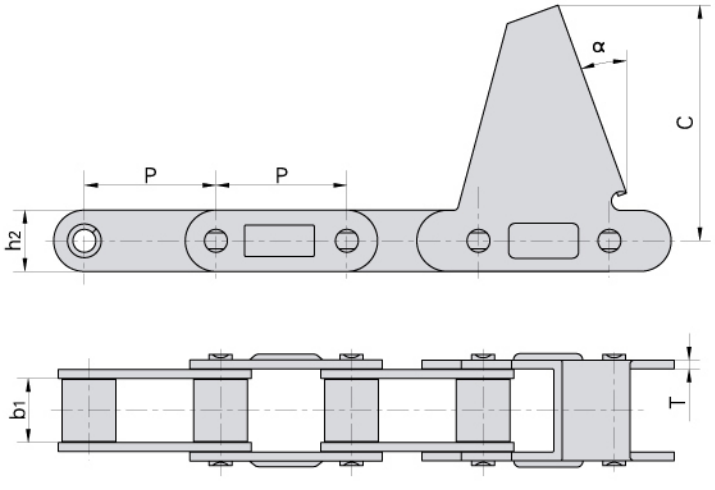

Donghua Chain No. *Donghua Ketten Nr.*	P	b1	h2	T	C	α
	mm	mm	mm	mm	mm	
CA550–CPE	41.4	19.81	19.3	2.8	74.5	20°

C type steel agricultural chain with attachments
Anbauteile für Landmaschinenketten C-Typ



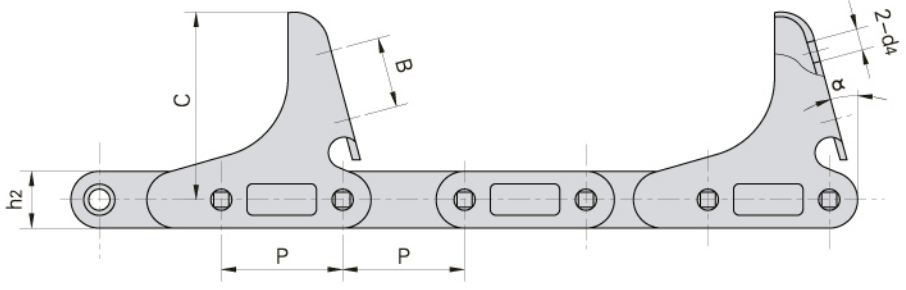

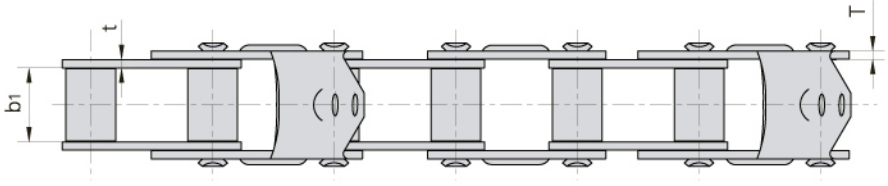

Donghua Chain No. *Donghua Ketten Nr.*	P	b1	h2	T	C	B	d4	α
	mm	mm	mm	mm	mm	mm	mm	
CA555–C6E	41.40	12.70	19.30	3.10	63.50	–	–	15°
CA555–C6EJ	41.40	12.70	19.30	3.25	66.00	25.40	7.30	15°
CA555–C6EJF1	41.40	12.70	19.30	3.10	66.00	25.40	5.50	15°

C type steel agricultural chain with attachments
Anbauteile für Landmaschinenketten C-Typ

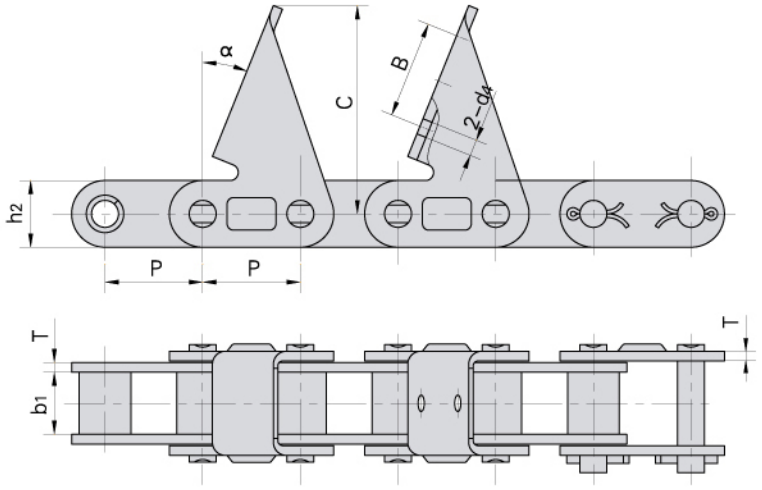

Donghua Chain No. *Donghua Ketten Nr.*	P	b1	h2	B	d4	T	C	α
	mm	mm	mm	mm	mm	mm	mm	
CA627–CPE	30.0	19.05	20.5	–	–	3.0	64.0	22°
CA627–CPEF3	30.0	19.05	20.5	30.0	5.0	3.0	64.0	22°



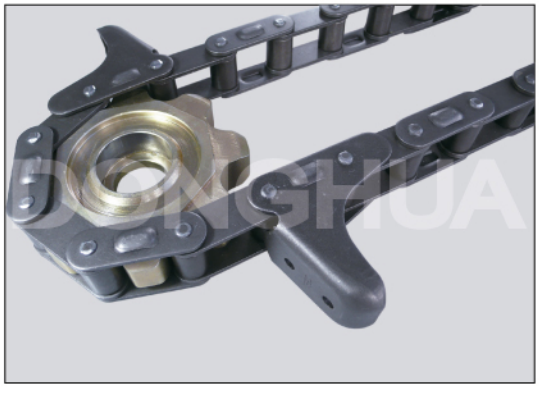

C type steel agricultural chain with attachments
Anbauteile für Landmaschinenketten C-Typ

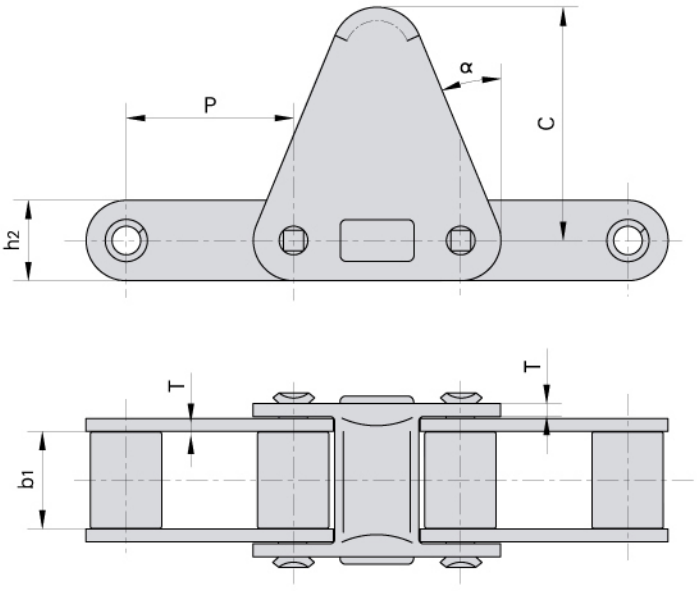

Donghua Chain No. *Donghua Ketten Nr.*	P	b1	h2	T	C	α
	mm	mm	mm	mm	mm	
CA620–C30E	42.01	24.51	20.2	3.25	58.7	22.5°

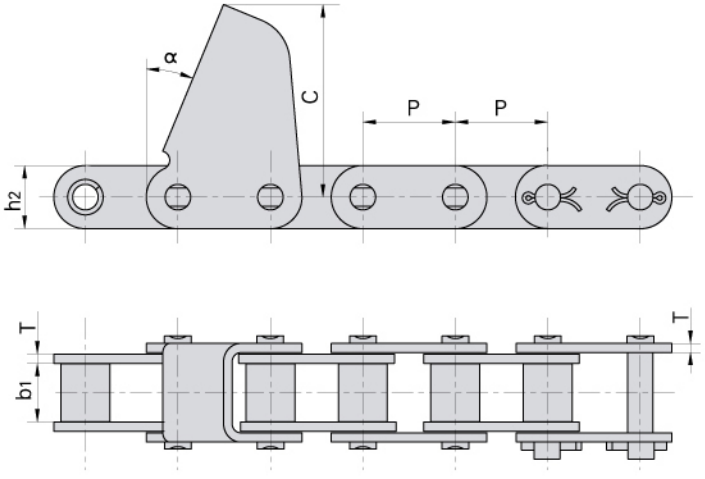

Donghua Chain No. *Donghua Ketten Nr.*	P	b1	h2	T	C	α
	mm	mm	mm	mm	mm	
CA627–CPEF1	30.0	19.05	20.5	3.0	62.5	22.5°
CA627–CPEF2	30.0	19.60	20.5	3.0	62.5	22.5°
CA627–CPEF9	30.0	19.05	20.5	3.0	62.5	22.0°

C type steel agricultural chain with attachments
Anbauteile für Landmaschinenketten C-Typ

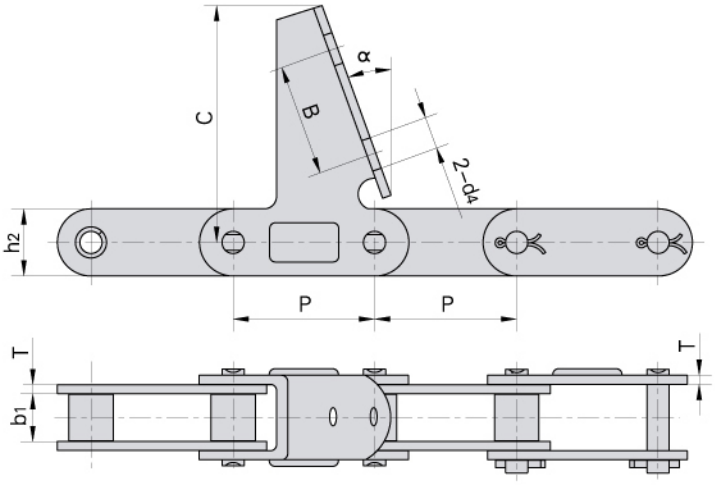

Donghua Chain No. *Donghua Ketten Nr.*	P	b1	h2	d4	T	B	C	α
	mm	mm	mm	mm	mm	mm	mm	
CA2060H–7AUE	38.1	12.57	18.0	8.5	3.25	30	57.2	22.5°
CA550–CPEF1	41.4	19.81	19.3	–	2.8	–	63.5	15.0°

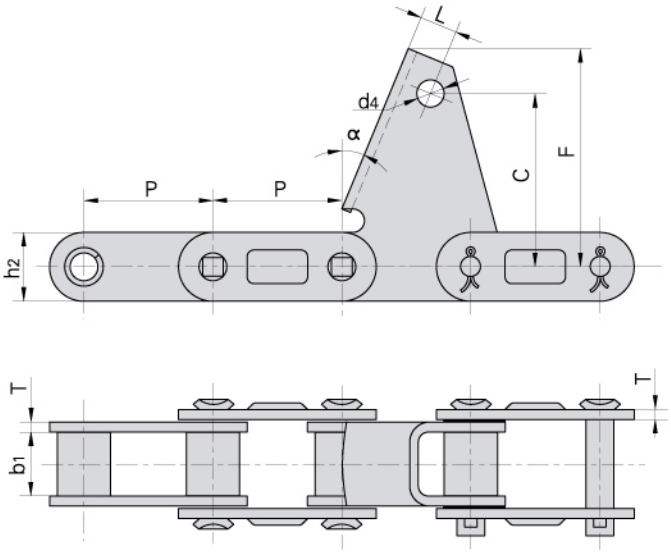

Donghua Chain No. *Donghua Ketten Nr.*	P	b1	h2	L	d4	T	C	F	α
	mm	mm	mm	mm	mm	mm	mm	mm	
38.4VBF4	38.4	19.05	20.5	15.0	8.1	3.0	48.0	64.0	22°

C type steel agricultural chain with attachments
Anbauteile für Landmaschinenketten C-Typ

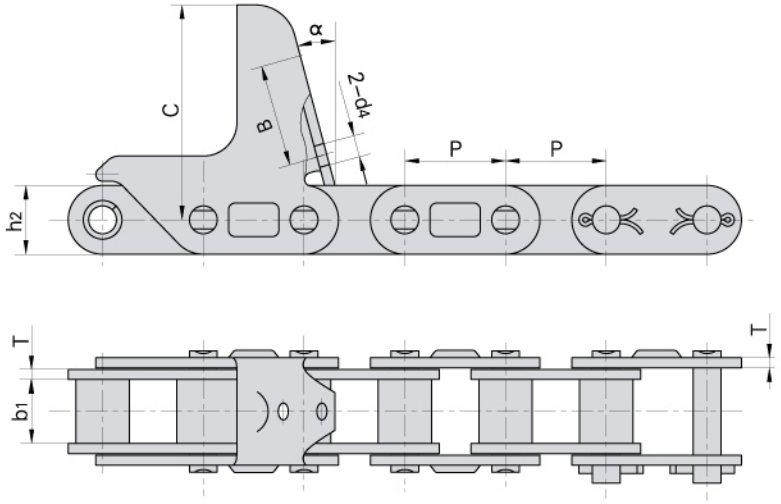

Donghua Chain No. *Donghua Ketten Nr.*	P	b1	h2	B	d4	T	C	α
	mm	mm	mm	mm	mm	mm	mm	
CA627–M40A	30.0	19.05	20.5	36.1	6.5	3.0	63.0	15.0°
CA627–CPEF7	30.0	19.05	20.5	35.5	6.5	3.0	63.0	15.0°
CA627–CPEF11	30.0	19.05	20.5	30.0	6.5	3.0	63.0	22.5°

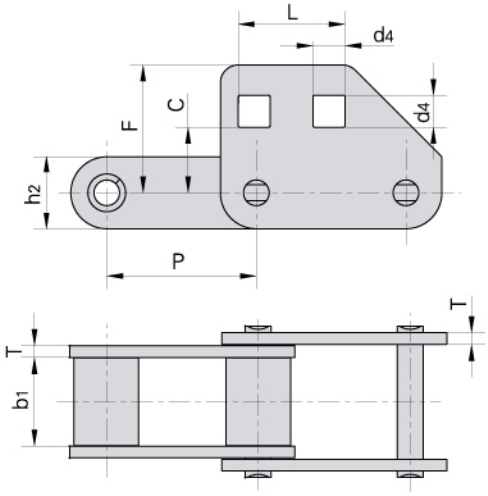

Donghua Chain No. *Donghua Ketten Nr.*	P	b1	L	T	C	F	d4
	mm	mm	mm	mm	mm	mm	mm
CA620F2	42.01	24.51	30	3.25	18.4	35.9	9

C type steel agricultural chain with attachments
Anbauteile für Landmaschinenketten C-Typ

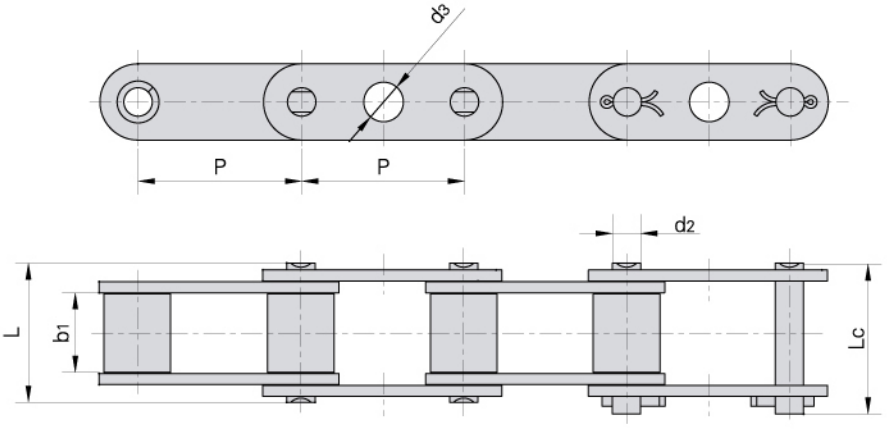

Donghua Chain No. *Donghua Ketten Nr.*	P	b1	d2	d3	L	Lc
	mm	mm	mm	mm	mm	mm
CA550GKF1	41.4	19.81	7.19	10	35	38

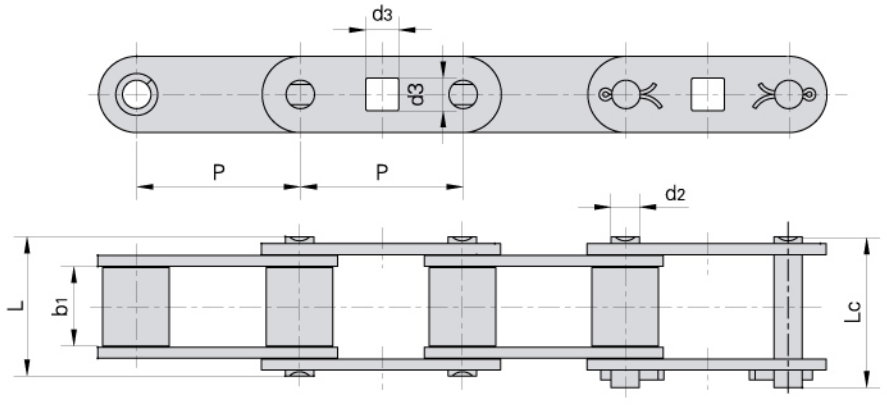

Donghua Chain No. *Donghua Ketten Nr.*	P	b1	d2	d3	L	Lc
	mm	mm	mm	mm	mm	mm
CA550GKF2	41.4	19.81	7.19	8.3	35	38

C type steel agricultural chain with attachments
Anbauteile für Landmaschinenketten C-Typ

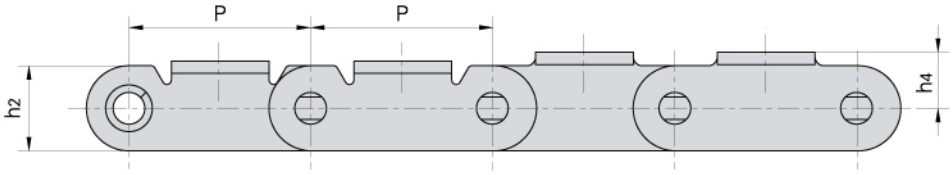

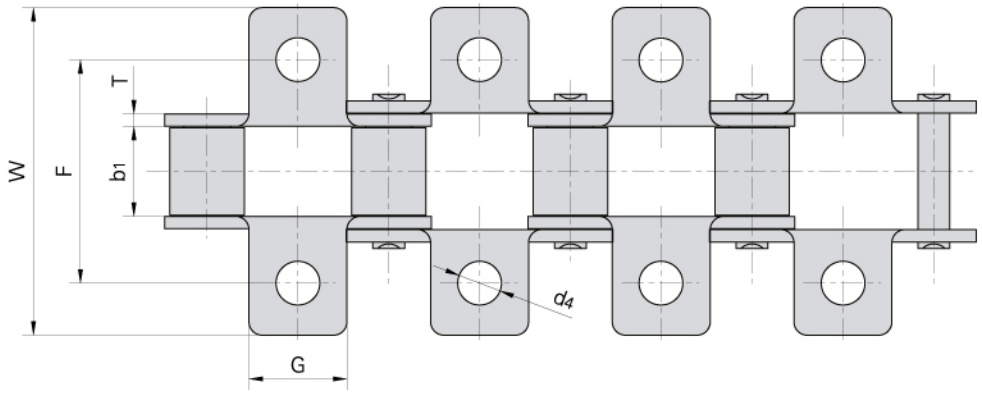

Donghua Chain No. *Donghua Ketten Nr.*	P	b_1	G	F	W	h_2	h_4	T	d_4
	mm	mm	mm	mm	mm	mm	mm	mm	mm
CA550K11	41.40	19.81	22.2	50.8	75.4	19.3	10.7	2.80	9.92
CA550K1F8	41.40	19.81	22.2	50.8	75.4	19.3	10.7	2.80	6.75
CA550K17	41.40	19.81	22.2	54.0	76.2	19.3	12.7	2.80	6.75
CA550K20	41.40	19.81	22.2	50.8	76.2	19.3	12.7	2.80	6.75
CA550K20	41.40	19.81	22.2	54.0	76.2	19.3	12.7	2.80	9.53
CA620K1F2	42.01	24.51	22.2	62.7	80.2	20.2	11.5	3.25	6.75
CA620KIS	42.01	24.51	22.2	62.7	80.2	20.2	11.5	3.25	8.33

C type steel agricultural chain with attachments
Anbauteile für Landmaschinenketten C-Typ

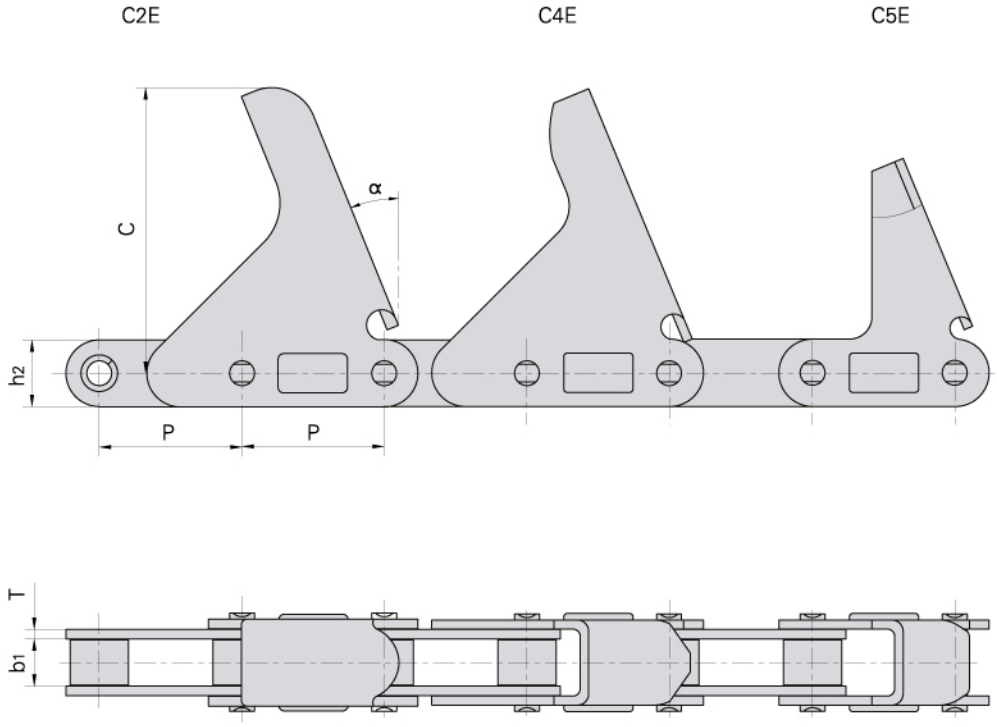

Donghua Chain No. *Donghua Ketten Nr.*	P	b1	h2	T	C	α
	mm	mm	mm	mm	mm	
CA2060H–C2E	38.1	12.57	18.0	3.25	76.2	22.5°
CA2060H–C4E	38.1	12.57	18.0	3.25	75.8	22.5°
CA2060H–C5E	38.1	12.57	18.0	3.25	57.2	22.5°

C type steel agricultural chain with attachments
Anbauteile für Landmaschinenketten C-Typ

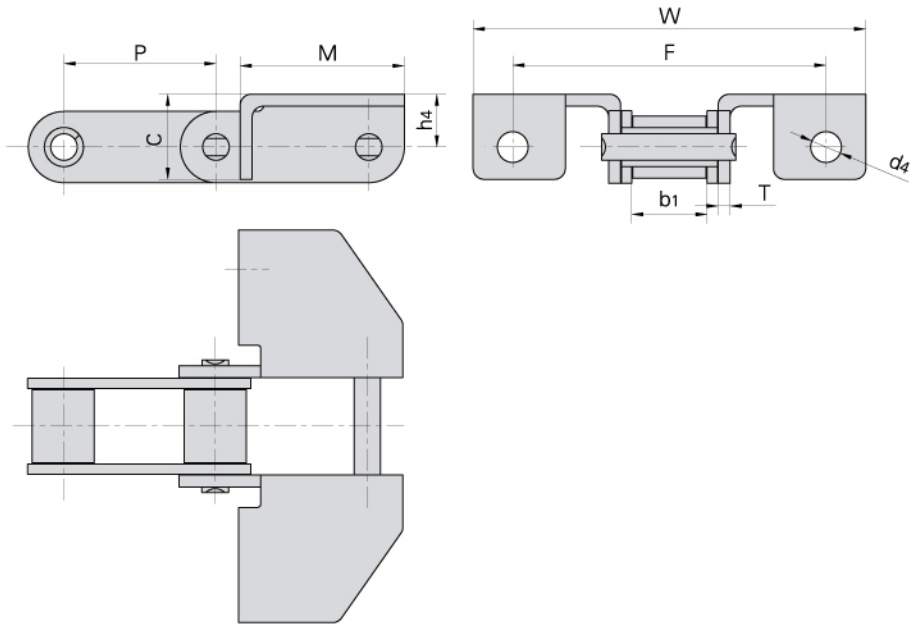

Donghua Chain No. *Donghua Ketten Nr.*	P	b1	M	C	F	W	T	h4	d4
	mm	mm	mm	mm	mm	mm	mm	mm	mm
CA550–F7A	41.4	19.81	44.5	23.3	84.9	106.4	3.25	14.3	8.33
CA550G57	41.4	19.81	44.5	23.3	–	106.4	3.25	14.3	–

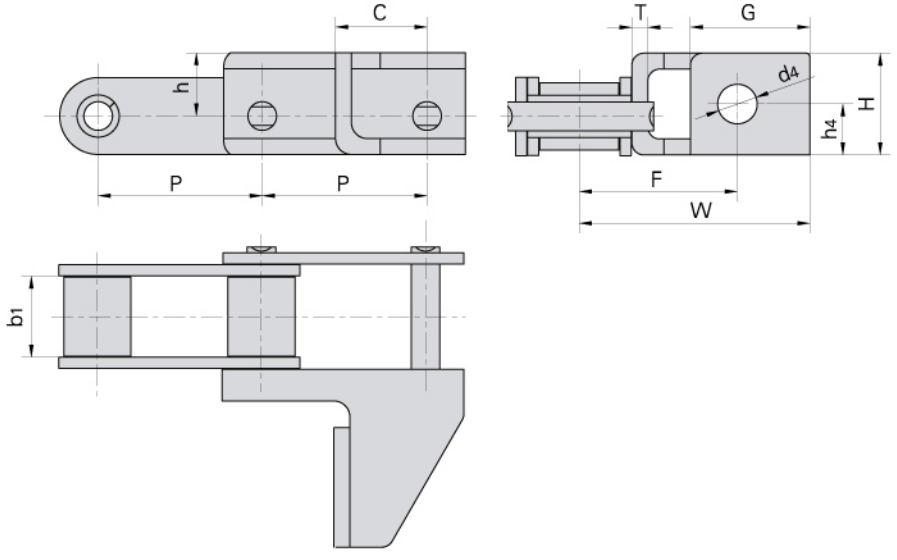

Donghua Chain No. *Donghua Ketten Nr.*	P	b1	C	h	H	G	h4	F	W	T	d4
	mm	mm	mm	mm	mm	mm	mm	mm	mm	mm	mm
CA550–G50	41.4	19.81	23.0	17.5	27.2	30.0	12.9	39.7	57.9	4.0	9.92
CA550–G50S	41.4	19.81	23.0	15.9	25.6	30.0	12.9	39.7	57.9	4.0	9.92

C type steel agricultural chain with attachments
Anbauteile für Landmaschinenketten C-Typ

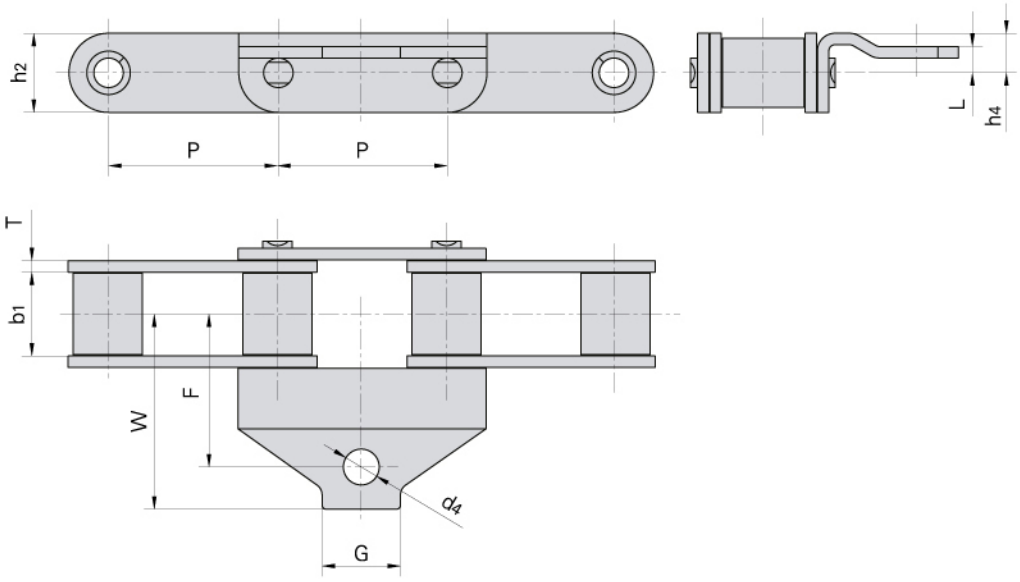

Donghua Chain No. / *Donghua Ketten Nr.*	P	b1	G	F	W	h2	L	h4	T	d4
	mm	mm	mm	mm	mm	mm	mm	mm	mm	mm
CA550AH	41.4	19.81	19.1	37.3	47.6	19.3	6.4	9.65	2.8	8.73

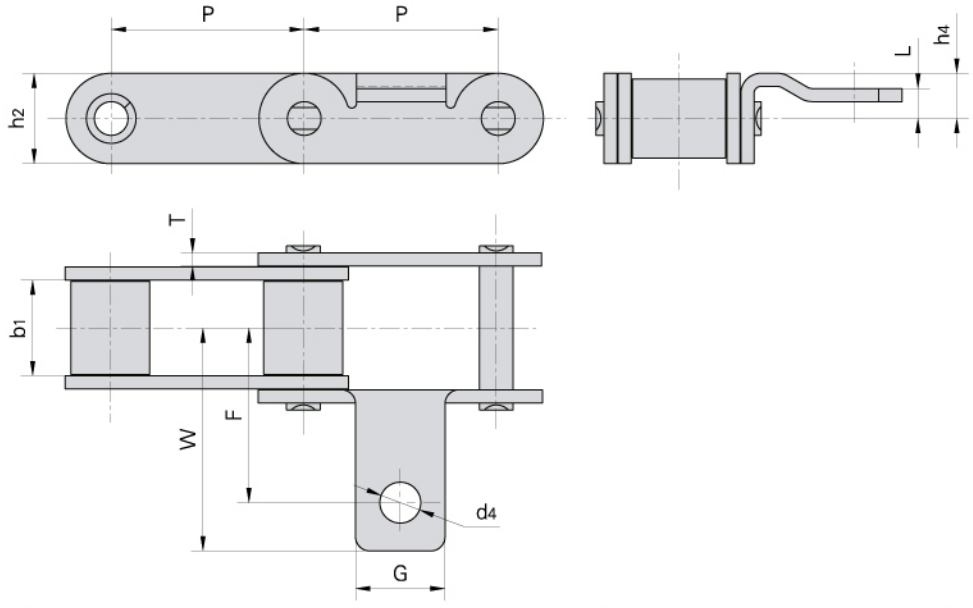

Donghua Chain No. / *Donghua Ketten Nr.*	P	b1	G	F	W	h2	L	h4	T	d4
	mm	mm	mm	mm	mm	mm	mm	mm	mm	mm
CA550AID	41.4	19.81	19.1	37.3	47.6	19.3	6.4	9.65	2.8	8.73

C type steel agricultural chain with attachments
Anbauteile für Landmaschinenketten C-Typ

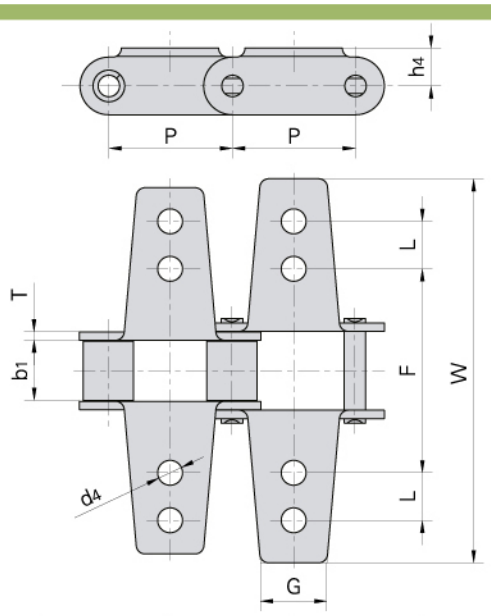

Donghua Chain No. *Donghua Ketten Nr.*	P	b1	L	G	F	W	h4	T	d4
	mm	mm	mm	mm	mm	mm	mm	mm	mm
CA550K6	41.40	19.81	15.9	22.2	68.3	128.6	12.7	2.80	8.33
CA620K12	42.01	24.51	15.9	22.2	69.9	130.2	23.8	3.25	6.75

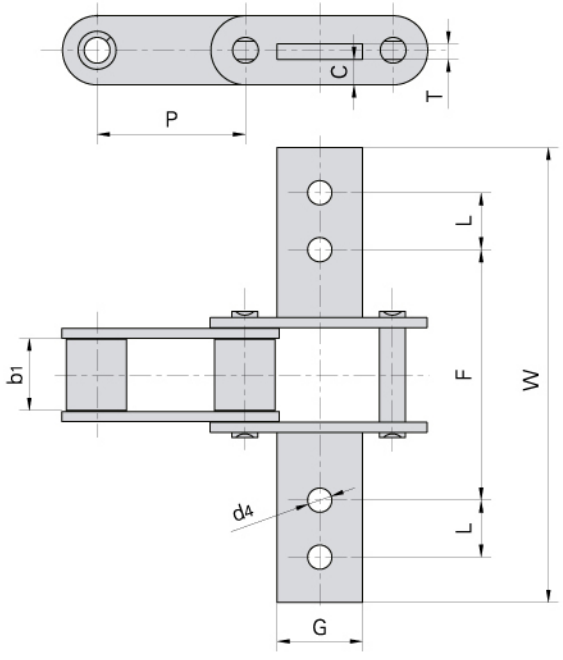

Donghua Chain No. *Donghua Ketten Nr.*	P	b1	G	L	F	W	T	C	d4
	mm	mm	mm	mm	mm	mm	mm	mm	mm
CA550K8	41.40	19.81	23.8	15.9	69.9	127.0	4.3	7.1	6.75
CA550K9	41.40	19.81	23.8	15.9	69.9	127.0	4.3	7.9	6.75

C type steel agricultural chain with attachments
Anbauteile für Landmaschinenketten C-Typ

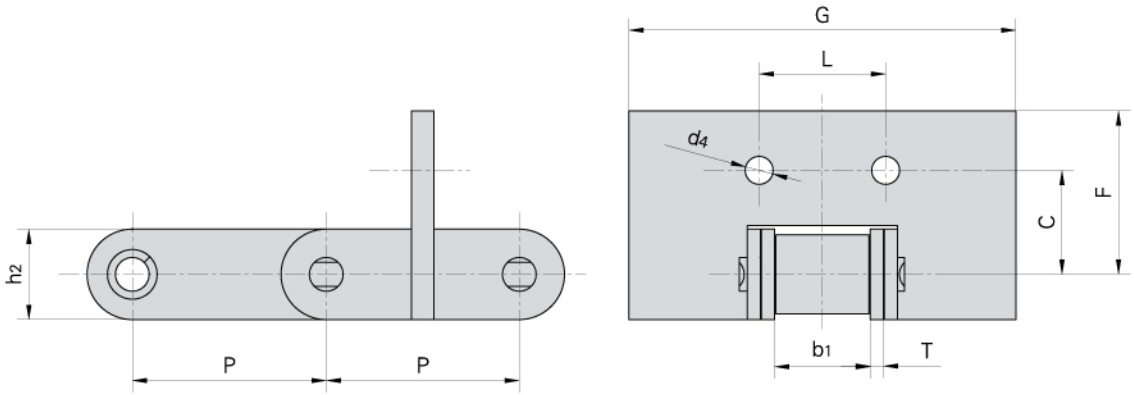

Donghua Chain No. / *Donghua Ketten Nr.*	P	b1	C	F	L	G	h2	T	d4
	mm	mm	mm	mm	mm	mm	mm	mm	mm
CA550F11	41.4	19.81	22.2	34.9	27.0	82.6	19.3	2.8	5.95

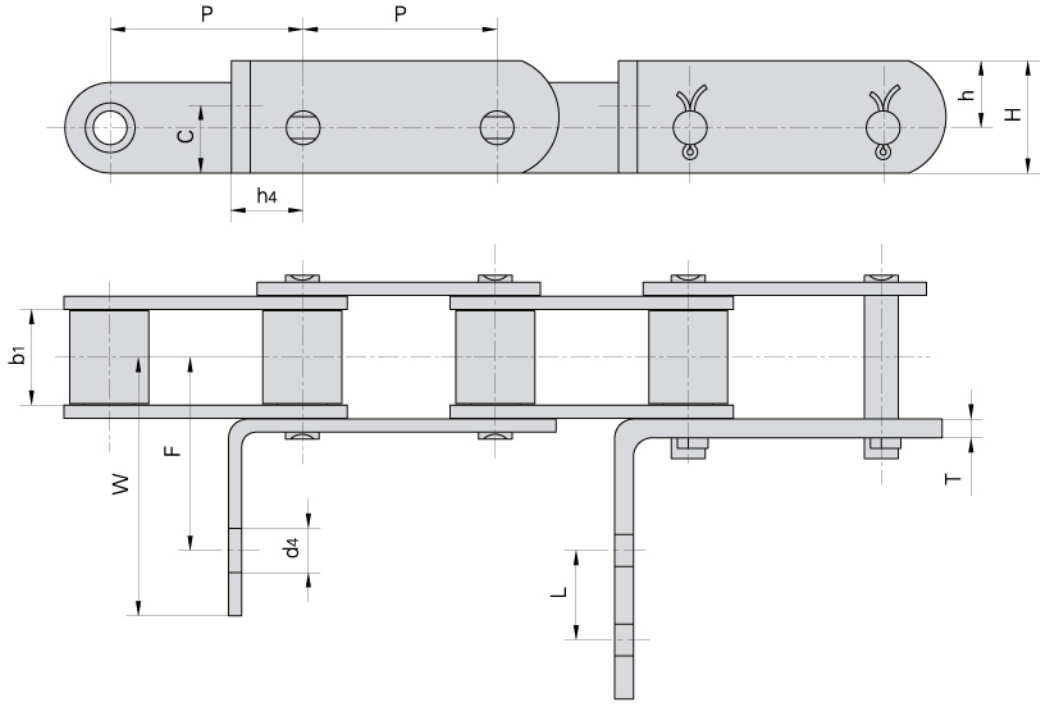

Donghua Chain No. / *Donghua Ketten Nr.*	P	b1	C	h	H	h4	F	L	W	T	d4
	mm	mm	mm	mm	mm	mm	mm	mm	mm	mm	mm
CA550–GX	41.4	19.81	14.5	14.3	24.0	15.5	41.7	19.1	73.4	4.00	6.75
CA550–G27	41.4	19.81	14.5	14.3	24.0	15.9	41.7	–	55.2	2.80	8.33
CA550–G27S	41.4	19.81	14.5	14.3	24.0	15.9	41.7	–	55.2	3.25	8.33

C type steel agricultural chain with attachments
Anbauteile für Landmaschinenketten C-Typ

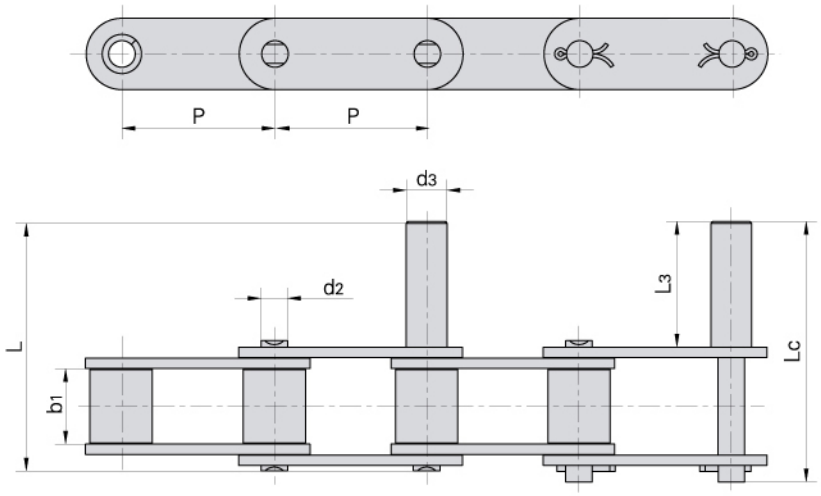

Donghua Chain No. *Donghua Ketten Nr.*	P	b1	d2	d3	L3	L	Lc
	mm	mm	mm	mm	mm	mm	mm
CA550–D1	41.40	19.81	7.19	12.7	50.80	84.5	87.5
CA550–D2	41.40	19.81	7.19	7.19	31.75	65.4	68.4
CA550–D4	41.40	19.81	7.19	11.0	34.00	67.7	70.7
S62F6	41.19	25.40	9 .00	12.7	40.00	84.8	87.8
S62F4	41.19	26.00	8.00	12.7	40.00	80.8	83.8

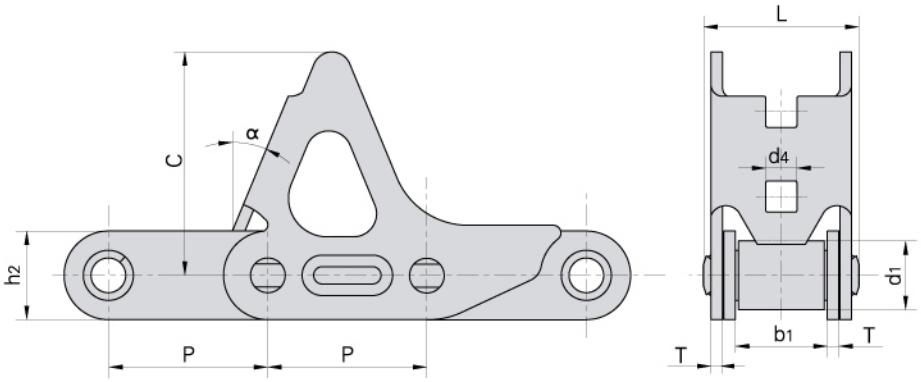

Donghua Chain No. *Donghua Ketten Nr.*	Pitch *Teilung*	Roller diameter *Rollen-durch-messer*	Width between inner plates *Innere Breite*	Pin length *Bolzen-länge*	Plate dimension *Laschen-abmessugen*					Ultimate tensile strength *Min. Bruchkraft*	Weight per meter *Gewicht*
	P	d1 max	b1 min	L max	h2 max	T	C	d4	α	Q min	q
	mm	mm	mm	mm	mm	mm	mm	mm		kN	kg/m
55VDF1–CPEF	41.4	17.9	22.5	39.7	23.0	3.0	58	8.1	22.5°	50/11248	3.68

Special agricultural chains with attachments
Sonder-Landmaschinenketten und Anbauteile

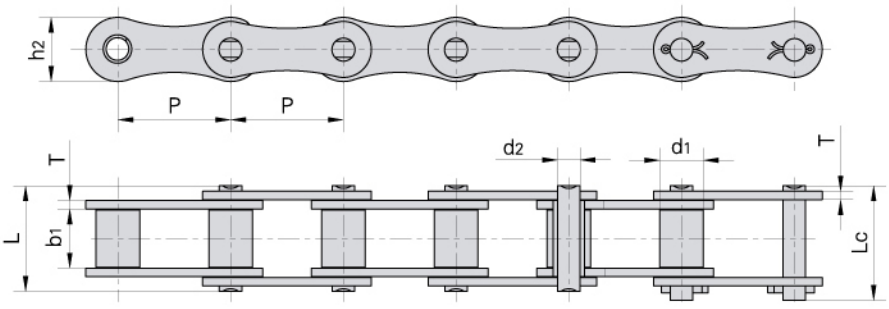

Donghua Chain No. *Donghua Ketten Nr.*	Pitch *Teilung*	Roller diameter *Rollen-durch-messer*	Width between inner plates *Innere Breite*	Pin diameter *Bolzen-durch-messer*	Pin length *Bolzen-länge*		Plate dimension *Laschen-abmessugen*		Ultimate tensile strength *Min. Bruchkraft*	Weight per meter *Gewicht*
	P	d1 max	b1 min	d2 max	L max	Lc max	h2 max	T max	Q min	q
	mm	mm	mm	mm	mm	mm	mm	mm	kN/LB	kg/m
P41.3	41.3	16.0	21.4	8.28	39.0	42.0	23.5	3.1	50/11363	2.27

Donghua Chain No. *Donghua Ketten Nr.*	P	C	E	F	W	d4
	mm	mm	mm	mm	mm	mm
P41.3SD	41.3	25	25	60	79	6.4

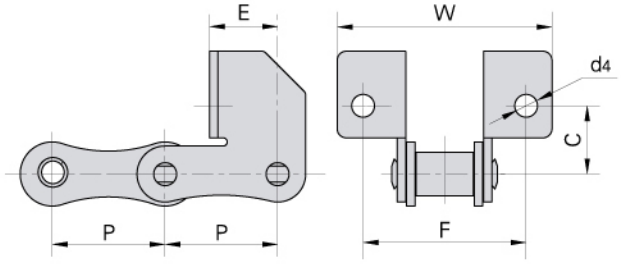

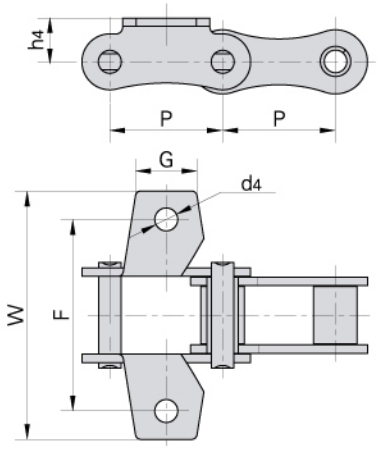

Donghua Chain No. *Donghua Ketten Nr.*	P	G	F	W	h4	d4
	mm	mm	mm	mm	mm	mm
P41.3K1	41.3	22.0	70.5	91.3	16.0	8.4

Special agricultural chains with attachments
Sonder-Landmaschinenketten und Anbauteile

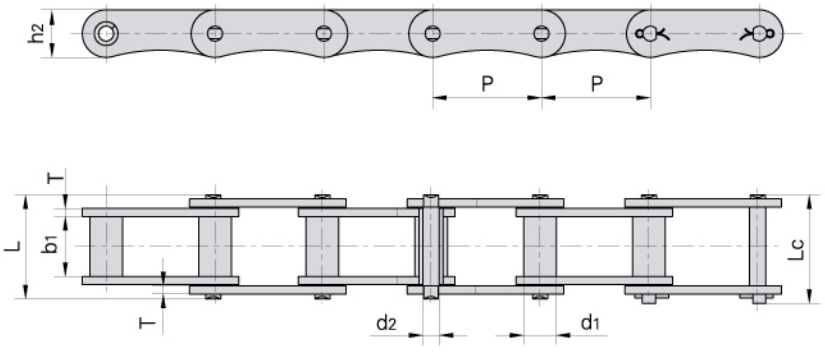

Donghua Chain No. *Donghua Ketten Nr.*	Pitch *Teilung*	Roller diameter *Rollen-durch-messer*	Width between inner plates *Innere Breite*	Pin diameter *Bolzen-durch-messer*	Pin length *Bolzen-länge*		Plate depth *Laschen-höhe*	Plate thickness *Laschen-dicke*	Ultimate tensile strength *Min. Bruchkraft*	Weight per meter *Gewicht*
	P	d_1 max	b_1 min	d_2 max	L max	Lc max	h_2 max	T max	Q min	q
	mm	mm	mm	mm	mm	mm	mm	mm	kN/LB	kg/m
LV40	40	12.0	22.0	6.0	38.2	41.0	17.5	3.0	31.4/7136	1.53

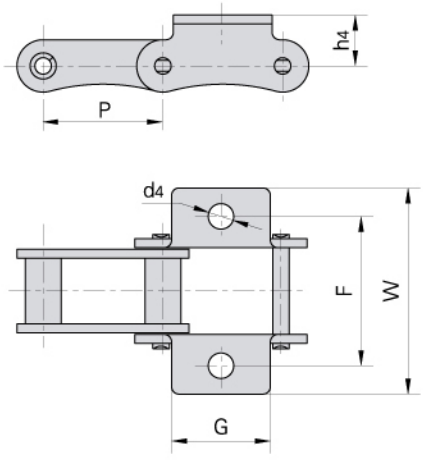

Donghua Chain No. *Donghua Ketten Nr.*	P	G	F	W	h_4	d_4
	mm	mm	mm	mm	mm	mm
LV40K1	40.0	33.0	50.0	69.0	17.0	8.5

Special agricultural chains with attachments
Sonder-Landmaschinenketten und Anbauteile

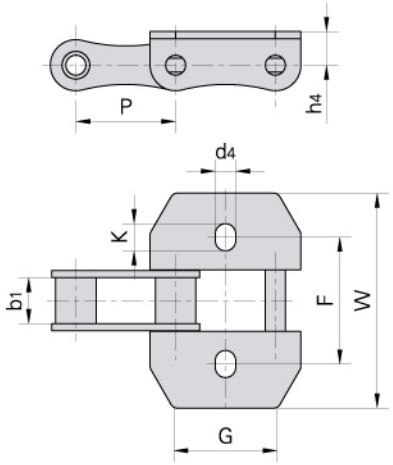

Donghua Chain No. *Donghua Ketten Nr.*	P	b1	G	F	W	h4	d4	K
	mm	mm	mm	mm	mm	mm	mm	mm
CA642S103	41.4	19	40	53	89.6	14.0	8.5	11.25

S1 attachments
S1 Befestigungslaschen

S2 attachments
S2 Befestigungslaschen

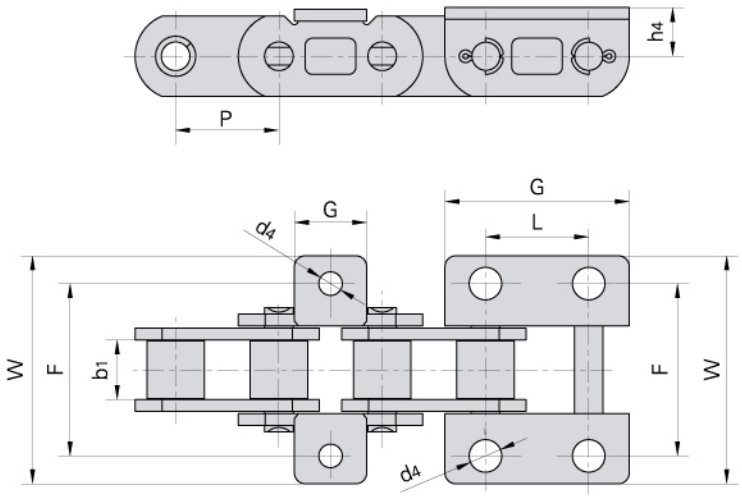

Donghua Chain No. *Donghua Ketten Nr.*	P	b1	L	G	F	W	h4	d4
	mm	mm	mm	mm	mm	mm	mm	mm
CAE44151S1	28.575	16.200	–	20.0	47.0	61.0	13.0	6.50
CAE44151S2	28.575	16.200	28.58	51.0	47.0	62.4	13.5	9.00
P28F3	28.575	15.875	28.58	50.8	46.8	62.0	12.7	9.02

The International Organization for Standardization had issued the ISO10823:2004 standard of Guidance on the selection of roller chain drives, If you try to calculate the input power You must consider to revise it according to the following formal.
Actual power = input power × service factor × strand factor

Die Internationale Organisation für Normung hat die ISO10823:2004 Normungsrichtlinien für die Auswahl der Rollenkettenantriebsleistungen erlassen. Sollte man versuchen, die Antriebsleistung zu berechnen, so müsste man sie entsprechend der folgenden Tabelle korrigieren.
Reale Antriebsleistung = Antriebsleistung × Faktor der Betriebsbedingungen × Strangfaktor

■ Service factor table *Tabelle für die Faktoren der Betriebsbedingungen*

Load type *Belastung*	Source of power *Leistungsquelle*		
	Internal combustion engine *Verbrennungsmotor* Hydraulic drive *Hydraulische Antriebe*	Electric motor *Elektromotor* Turbine *Turbine*	Internal combustion *Verbrennungsmotor* Mechanical drive *Mechanische Antriebe*
Smooth *Gleichmäßig*	1.0	1.0	1.2
Moderate impact *Mittlere Stöße*	1.2	1.3	1.4
High impact *Schwere Stöße*	1.4	1.5	1.7

■ Strand factor table *Tabelle für die Strangfaktoren*

Number of strand *Anzahl der Stränge*	1	2	3	4	5	6
Factor *Faktor*	1.0	1.7	2.5	3.3	4.1	4.9

The chain factories with long history in the world have their own chain transmission power rating graph and power table. Though our country haven't created our own power rating graph, We can refer to the ISO 10823-1996 standard selecting the drive power or selecting chain according to the drive power ,The condition is that we should know the number of the small sprocket's teeth and its revolution .
Now we use the transmission part in walking tractor and the transmission power in ratary tillage to proof whether the chain selection is correct.

Viele Kettenwerke mit langer Tradition in der Welt haben ihre eigene Leistungskurven und –schaubilder erstellt. Obwohl in China noch keine Leistungskurve ausgelegt wird, kann uns die ISO10823-1996 Normungsrichtlinien für die Auswahl der Antriebsleistung und Ketten zur Verfügung stehen. Die Voraussetzung dafür ist, dass die Zähnezahl und die Geschwingigkeit des treibenden Rades (Ritzel) vorgegeben sind.
Im Folgenden ist ein Beispiel für die Antriebsleistung eines Einachstraktors gegeben, um zu überprüfen, ob die Kettenauswahl angemessen ist.

1. Chain drive part

Small sprocket rpm n1=1351 Tooth number of small sprocket Z1=14 Input power =10.944HP=8.16kW

2. Ratary tillage chain part

Small sprocket rpm n1=199 Tooth number of small sprocket Z1=13 Input power=9.888HP =7.37kW
From A series horsepower rating graph, You'll find that selected 12A-2 roller chain is unsuitable,
You should choose 16A-1 or 12AH-2 roller chain instead of 12A-2.

1. Teil für den Kettenantrieb

Antriebsdrehzahl n1=135 min^{-1} Zähnezahl des treibenden Rades Z1=14 Antriebsleistung=10.944PS=8.16kW
Entsprechend der Leistungskurve der Rollenketten B Serie ist die Rollenkette 08B-2 auszuwählen.

2. Teil für die rotierende Bodenbearbeitung

Antriebsdrehzahl n1=199 min^{-1} Zähnezahl des treibenden Rades Z1=13 Antriebsleistung=9.888PS=7.37kW
Entsprechend der Leistungskurve der Rollenketten A Serie wäre die Auswahl der Rollenkette 12A-2 nicht angemessen, richtig ist die Auswahl der Rollenkette 16A-1 oder der verstärkten Rollenkette 12AH-2.

HORSEPOWER RATING GRAPH (A SERIES ROLLER CHAIN)

LEISTUNGSSCHAUBILD IN PS (ROLLENKETTEN A SERIE)

DONGHUA CHAIN GROUP 2009/2010

For drive z1=19 teeth
Chain length 120 links / Ratio i =3
Service life:15000 hours

Zähnezahl des treibenden Rades z1=19
Kettenlänge 120 Glieder / Übersetzungsverhältnis i =3
Lebensdauer: 15000 Betriebsstunden

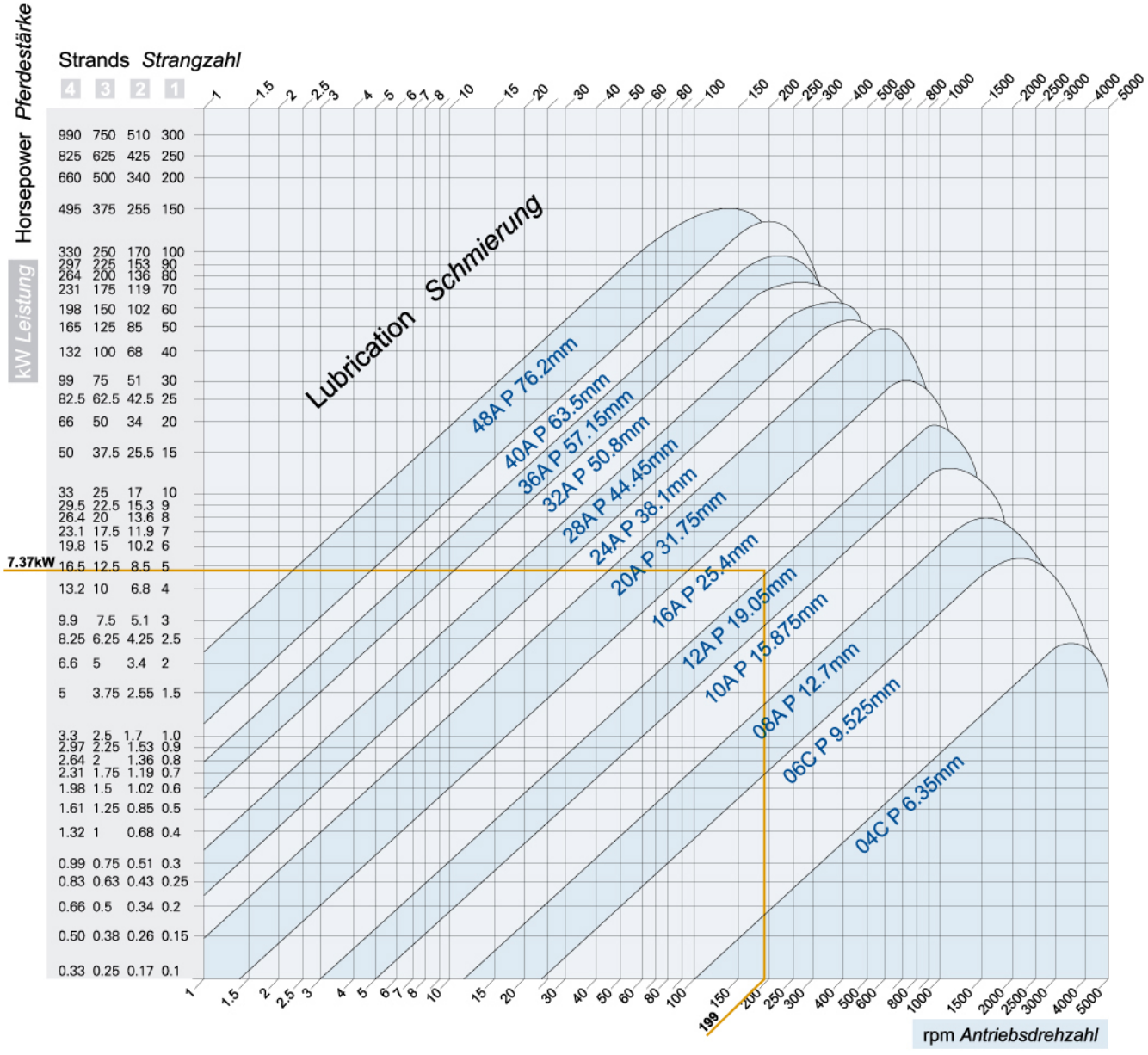

HORSEPOWER RATING GRAPH (B SERIES ROLLER CHAIN)

LEISTUNGSSCHAUBILD IN PS (ROLLENKETTEN B SERIE)

DONGHUA CHAIN GROUP 2009/2010

DONGHUA

For drive z1=19 teeth — *Zähnezahl des treibenden Rades z1=19*

Chain length 120 links / Ratio i =3 — *Kettenlänge 120 Glieder / Übersetzungsverhältnis i =3*

Service life:15000 hours — *Lebensdauer: 15000 Betriebsstunden*

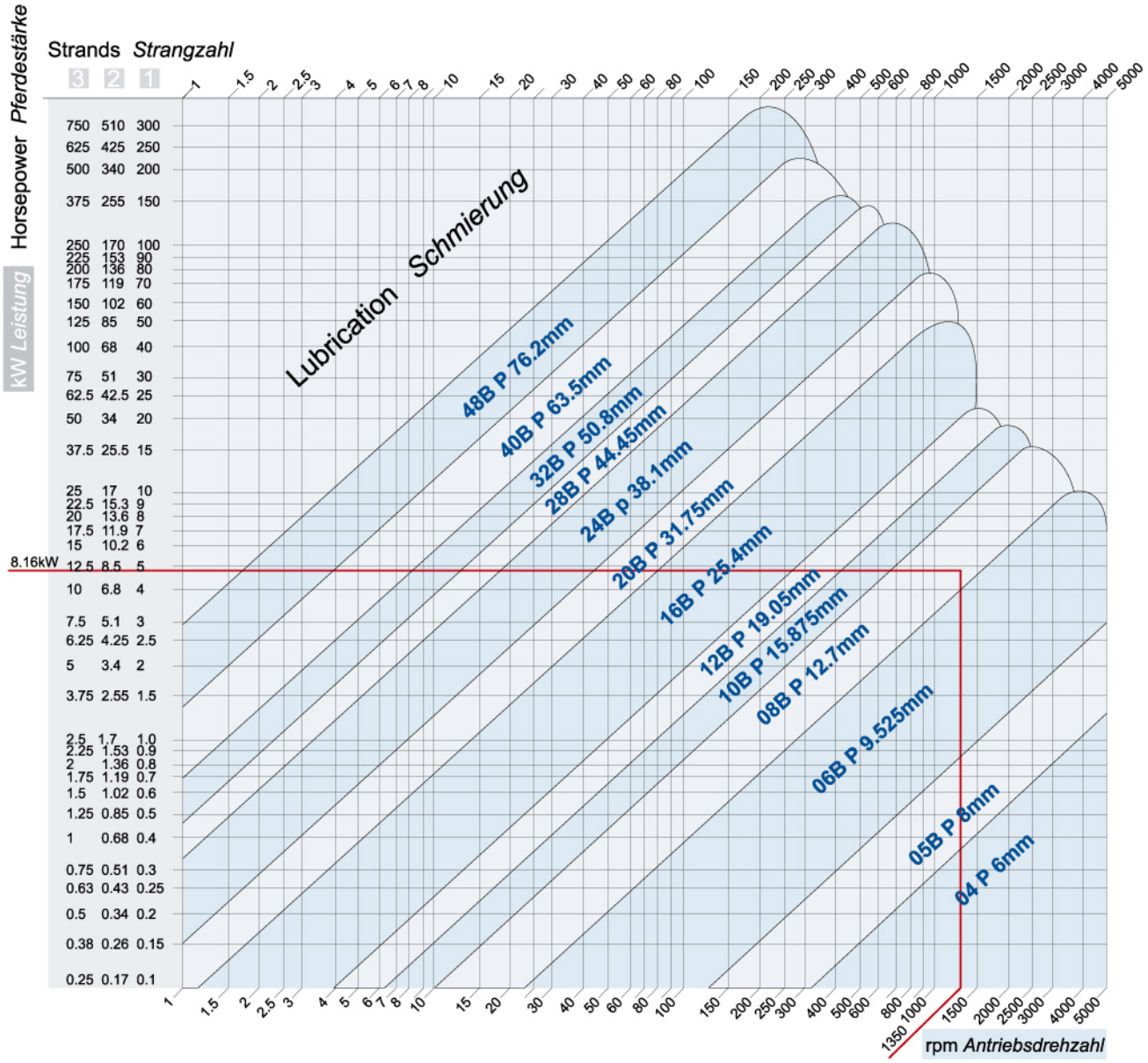

Lubrication of chain depends on the working environment, temperature, chain speed and so on.

1. Effection of working environment
Open drive such as combine swather etc, Use grease to lubricate.
Closed drive such as walking tractor etc, Use oil to lubricate.

2. Effection of temperature
Application in the temperature range of -5℃ to +60℃ is recommended.
In winter, the thin oil is recommended; But in summer, thick oil is recommended.

3. Effection of chain speed
The lubrication method is related to chain speed see following chart,
So selecting the lubrication method can refer to the following chart.

Die Schmierung der Ketten ist abhängig von der Arbeitsumgebung, Temperatur, Kettengeschwindigkeit etc..

1. Einfluss der Arbeitsumgebung
Beim offenen Antrieb z.B.Mähdrescher, Mähmaschine etc.wird Fettschmierung empfohlen.
Beim geschlossenen Antrieb z.B. Getriebegehäuse des Einachstraktors wird Ölschmierung empfohlen.

2. Einfluss der Temperatur
Normalerweise wird eine Schmierung zwischen -5℃~+60℃ empfohlen.
Im Winter ist vorzugsweise dünnflüssiges Öl anzuwenden, im Sommer eher zähflüssiges Öl.

3. Einfluss der Kettengeschwindigkeit
Die Art der Schmierung steht im direkten Zusammenhang mit der Kettengeschwindigkeit,
dazu sehen Sie bitte das folgende Schaubild.

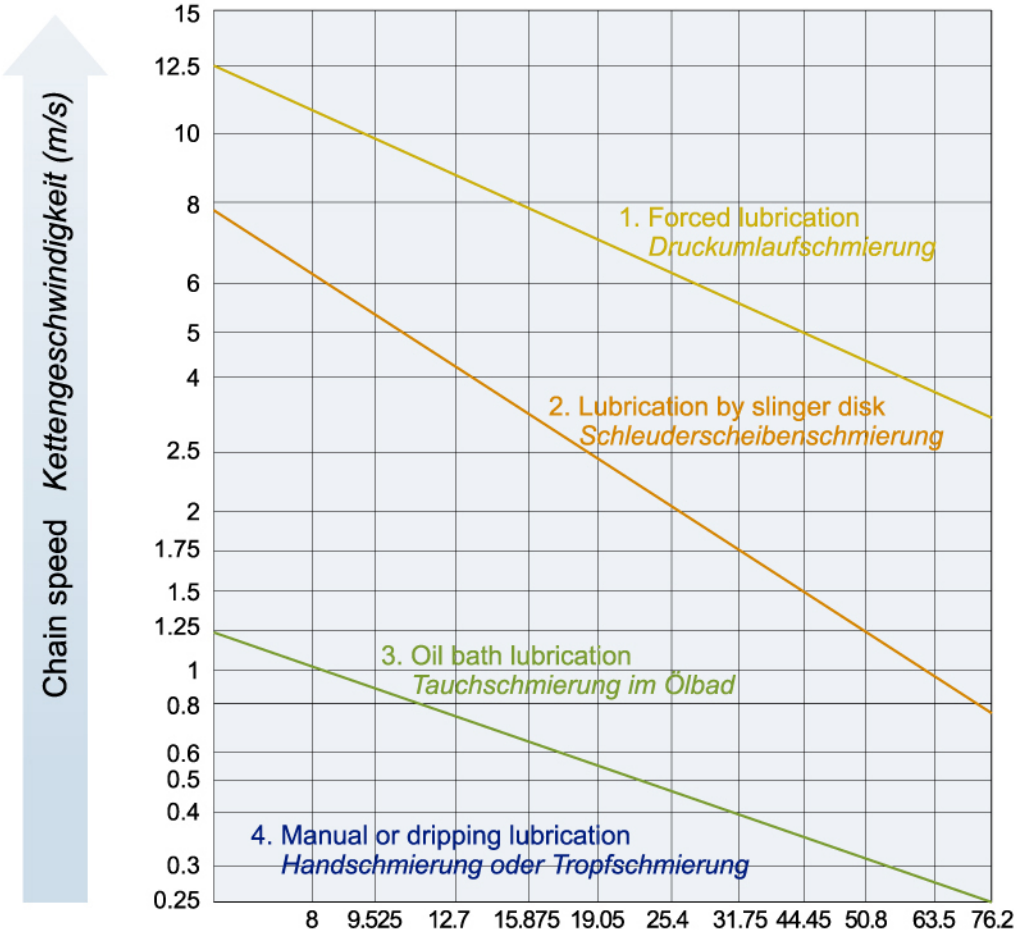

Lubrication *Schmierung*

Wear is caused by bearing pressure, angle-sliding movements of the pins, rotation of the rollers. Effective lubrication of the chain hinges is essential to protect agains highwear and also obtain optimum performance in addition to minimising power absorption, noise.

Der Lauf der Kette um die Räder verursascht durch die Winkel-Gleitbewegung der Bolzen einen Verschleiß der Gelenke. Aus diesem Grunde ist eine wirksame Schmierung unbedingt erforderlich. Sie kann den Verschleiß der Kette, deren Leistungsverlust und Geräusche erheblich reduzieren.

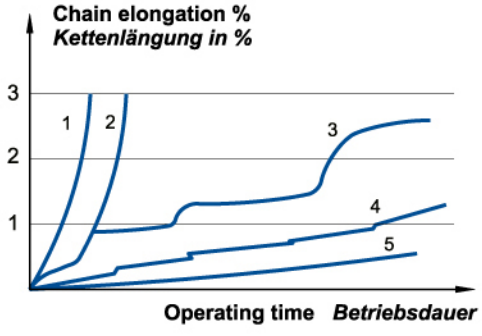

Graph 1: Without lubrication, Chain is wore out and destroyed within a very short time

Graph 2: Optimum initial lubrication only, High wear is occurred within a short time after the lubricant have been used up.

Graph 3: Manual lubrication, intermittent dry rub frequently occurs, especially when regular periodical relubrication is not well implemented.

Graph 4: Incorrect lubrication, Uneven chain wear is result from incorrect lubrication.

Graph 5: Correct lubrication, the right lubrication is the utmost important to obtain a optimum service life.

Kurve 1: *Ohne Schmierung: Trockenlauf führt schnell zu starkem Verschleiß und zerstört die Kette in kürzester Zeit.*

Kurve 2: *Nur Anfangsschmierung: Einmalige Anfangsschmierung verzögert nur bis zum Verbrauch des Schmiermittels den Verschleißvorgang.*

Kurve 3: *Handschmierung: Zeitweiser Trockenlauf tritt sehr leicht bei Handschmierung auf, wenn die Nachschmierfrist nicht eingehalten wird.*

Kurve 4: *Fehlehafte Schmierung: Fehlerhafte Schmierung hat ungleichmäßigen Verschleiß zur Folge und kann durch minderwertigen, verschmutzten oder ungeeigneten (falsche Viskosität) oder zu wenig Schmierstoff hervorgerufen werden.*

Kurve 5: *Richtige Schmierung: Einwandfreie Schmierung ist für die lange Lebensdauer der Ketten sehr wichtig.*

Lubrication and efficiency *Schmierung und Wirkungsgrad*

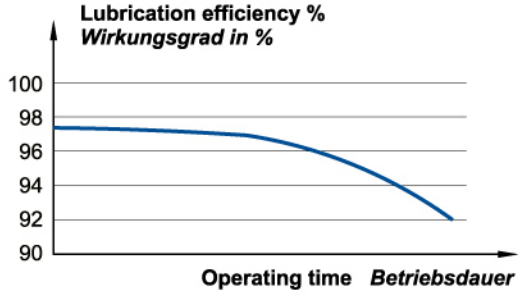

The left graph shows the efficiency of lubrication decrease with operating time.

Das linksstehende Schaubild zeigt den Wirkungsgrad der Schmierung im Verhältnis zu der Betriebsdauer.

Relubrication shall be done before discoloration of the rub surface which indicates the lubrication failure of the former lubrication.The specific lubrication intervals shall be determined by tests based on specific conditions and running conditions.

Es sollte vor der Verfärbung der Reibungsfläche nachgeschmiert werden, weil diese bedeutet, dass die vorherige Schmierung wirkungslos ist.
Die Nachschmierfrist muss für jeden Fall der Betriebsbedingungen in Versuchen ermittelt werden.

Lubricant *Schmiermittel*

First of all, the selection of an appropriate lubricant depends on the type of lubrication.

Die Auswahl eines geeigneten Schmiermittels richtet sich in erster Linie nach der Schmierungsart.

Just as the right diagram shows, low viscosity mineral oils are particularly suitable for chain drives.

Wie das rechtsstehende Bild zeigt, sind dünnflüssige Mineralöle geeignet für die Kettenschmierung.

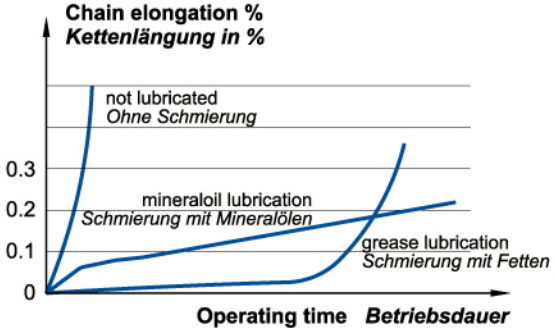

Recommended viscosity
Bei verschiedenen Umgebungstemperaturen zu empfehlende Viskosität der Schmiermittel

Ambient temperature ℃ *Umgebungstemperatur ℃*	Viscosity of lubricant *Viskosität der Schmiermittel*
–5℃ ~ +25℃	N100 (ISO VG 100)
+25℃ ~ +45℃	N150 (ISO VG 150)
+45℃ ~ +60℃	N220 (ISO VG 220)

For higher temperatures (e.g. furnace chains) or severe operating conditions, mud spattering open-type etc. or heavy-duty low speed chains, graphite or molybdenum disulfide (MoS_2) applied either as additive or spray will improve lubrication performance.

Low-viscosity or the grease products with a drop point of 70°C are also suitable for manual lubrication. Liquidized grease may be sprayed on the chains in special conditions and chains can start running immediately after the evaporation of the volatile carrier substance.

No matter which kind of lubricants and lubrication methods choosed, the most important issue is to ensure the lubricants flow into evenly (between pin and bush, between bush and roller).

Bei höheren Temperaturen (z.B. Ofenketten) oder harten Arbeitsumgebungen können Graphit oder Molybdändisulfid(MoS_2) als Beimischung zum Öl oder in Sprayform die Schmierung unterstützen.

Für Handschmierung kommen auch Fließfette oder gehärtete Fette mit einem Tropfpunkt von 70°C in Frage. In besonderen Fällen können verflüssigte Fette aufgesprüht werden. Die Inbetriebnahme kann sofort nach Verdampfung des flüchtigen Trägerstoffes erfolgen.

Egal, welche Schmiermittel und Schmierungsart angewendet werden, wichtig ist, dass das Schmiermittel die Gelenke (Bolzen, Buchsen) erreicht, die dem Verschleiß unterliegen

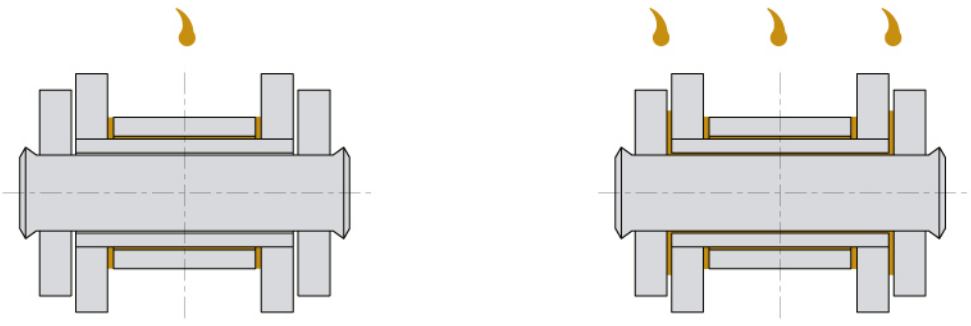

a) Incorrect method *falsche Methode*

b) Correct method *richtige Methode*

Selection of lubrication method *Auswahl der Schmierungsart*

Normally, there are five lubrication methods as below:
Normalerweise gibt es folgende fünf Schmierungsarten:

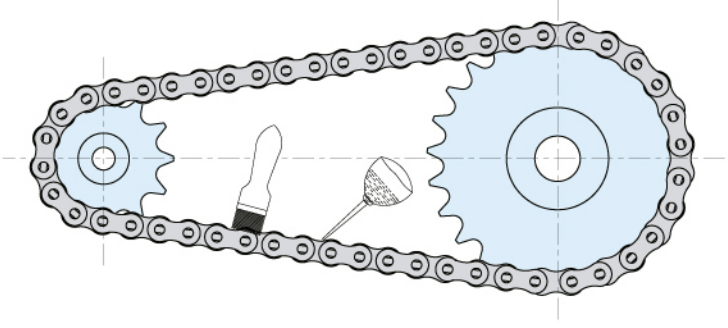

1. Manual lubrication
This type of lubrication by means of oil can and brush, which adding lubricant into the gap between outer and inner link plate of chain loose side periodically is not very safe and therefore this type lubrication only suitable for those chains with occasional operation or for those secondary drives and low chain speeds. Sufficient lubrication should take place at least once a day (if possible once every 8 running hours). Lubricant colouration should be avoided as far as possible.

1. Handschmierung
Mit Pinsel oder Ölkanne werden die Öle in die Spalte zwischen Außen- und Innenlaschen des Leertrums regelmäßig zugegeben. Diese Methode ist sehr unsicher und daher nur für den nicht ständigen Betrieb oder untergeordnete Antriebe und kleine Kettengeschwindigkeiten geeignet. Mindestens einmal täglich (möglichst alle 8 Betriebsstunden) sollte ausreichend geschmiert werden. Das Schmiermittel darf sich nicht verfärben.

2. Drip lubrication
Drip lubrication by means of wick oilers, needle oilers or drip oilers is only suitable for low bearing pressure drives. Lubricant colouration should be avoided as far as possible.

2. Tropfschmierung
Mit Docht-, Nadel- oder Tropföler ist nur für Antriebe geringerer Beanspruchung geeignet. Eine Verfärbung des Schmiermittels darf nicht eintreten.

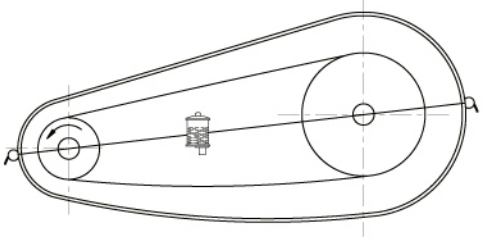

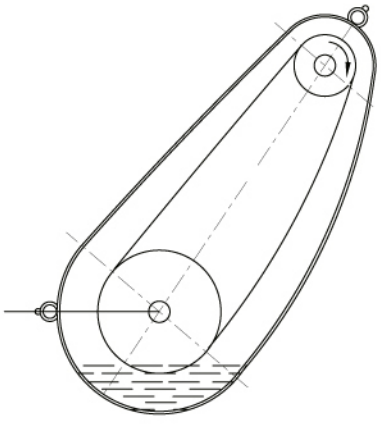

3. Oil bath lubrication (submerged lubrication)
There is just enough oil in a proper chain box for preventing the worn and elongated chain knocking against the casing wall to allow the chain plates to submerge into the bath up to the rollers or the bushings respectively. But immersion should not be too deep or too shallow .Too shallow immersion lubrication is not reliable. Too deep immersion may cause the oil to heat up and lead to untimely oxidation of the oil.

3. Tauchschmierung im Ölbad
In einem ausreichend groß bemessenen Schutzkasten (die durch Verschleiß gelängte Kette sollte nicht gegen die Gehäusewand schlagen können) befindet sich soviel Öl, dass die Kettenlaschen max. bis zu den Rollen bzw. Buchsen in das Bad eintauchen können.
Bei kleineren Eintauchtiefen ist die Schmierung nicht wirksam. Größere Eintauchtiefen führen zur Erwärmung und vorzeitiger Oxydation des Öls und somit zum großen Ölverlust.

4. Oil-ring lubrication (splash lubrication)

With this type of lubrication, the chain operates above oil level. A disk submerging into the lower oil level the depth is about 12.7mm-25.4mm. (Peripheral velocity between min. 3m/s and max. 40m/s, normally not bigger than 12.5m/s.) centrifuges oil against the casing walls from where it continuously runs down onto the chain via drip rails. The disk should be mounted on both sides of sprocket when the chain width above 127mm.

4. Schleuderscheibenschmierung

Die Kette arbeitet hierbei über dem Ölniveau. Eine in den tieferliegenden (etwa12,7mm~25,4mm) Ölspiegel eintauchende Scheibe (Umfangsgeschwindigkeit mind. 3 bis 12,5 m/s , max. bis 40 m/s) schleudert Öl gegen die Gehäusewände, von denen es an Tropfleisten kontinuierlich auf die Kette fließt. Wenn die Kettenbreite größer als 127 mm ist, sollte auf beiden Seiten des Kettenrades eine Scheibe montiert werden.

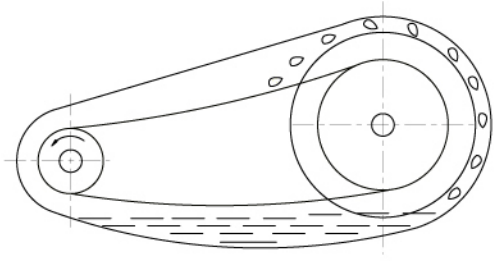

5. Force feed lubrication (pressure lubrication)

This type of lubrication is suitable for high-speed and heavy-duty type drives. Force feed lubrication is carried out to realize the circulating cooling of chains by means of oil pump and oil feeding pipe .The spray nozzles should be situated near the gearing places of chain and sprocket, and the nozzle number should be one more than the chain strands number to make them aim at the gap of each row link plate.

5. Druckumlaufschmierung

Diese Art ist bei schnelllaufenden Trieben und hohen Belastungen vorzusehen. Die Öle können durch eine Ölpumpe oder Anschluss an eine vorhandene Druckölleitung zugeführt werden, wodurch eine zirkulierende Abkühlung der Kette ermöglicht wird. Der Ölspritzer sollte an die Verzahnungsstelle zwischen Ketten und Kettenrädern plaziert werden und die Anzahl der Ölspritzer sollte um ein Stück höher sein als die der Kettenstränge, damit sie auf die Spalte jedes Laschenstrangs gerichtet werden können.

